AUTOMATION TECHNOLOGY

Intelligent Automation

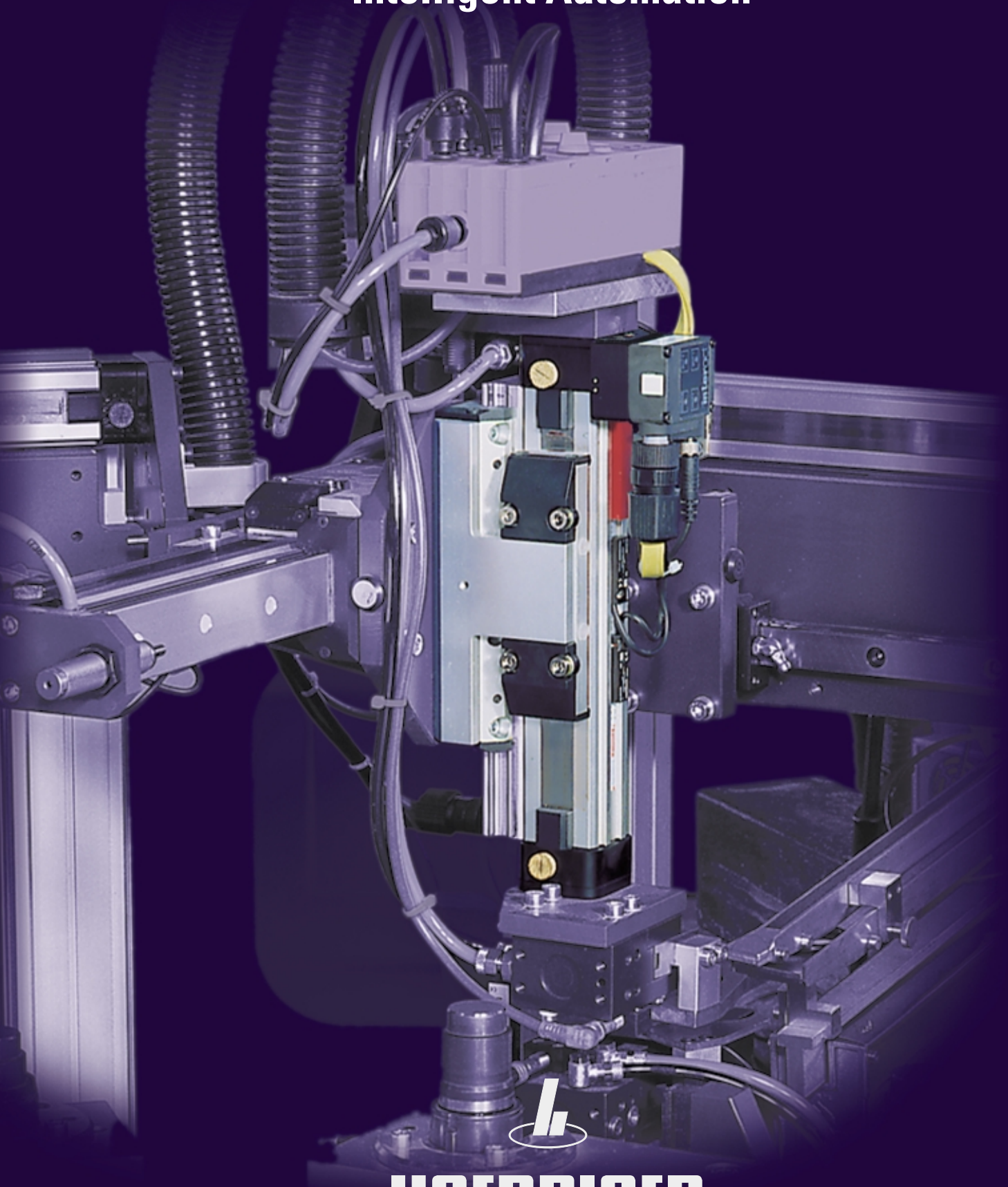

HOERBIGER

ORIGA

PNEUMATIC SYSTEMS

interact

... Integrated System Solutions

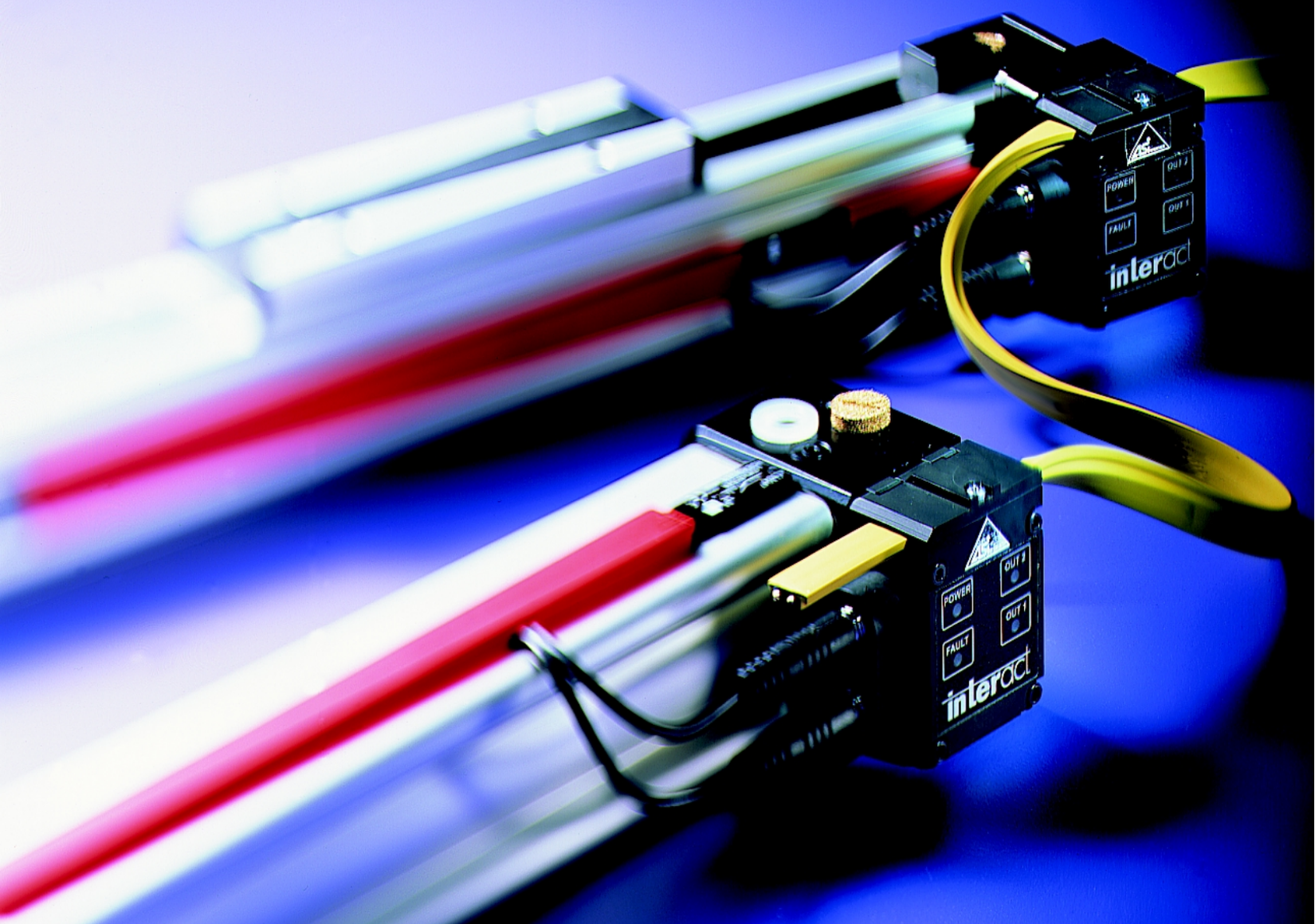

HOERBIGER
ORIGA

The Principle

SIMPLICITY IS THE ULTIMATE SOPHISTICATION

(LEONARDO DA VINCI)

This new innovative concept, "the Interact Drive Unit", with it´s fully integrated control and easy installation, greatly simplifies pneumatic automation.

The first integrated pneumatic standard system component, INTERACT is a real "plug and play" solution with important advantages for every automation user.

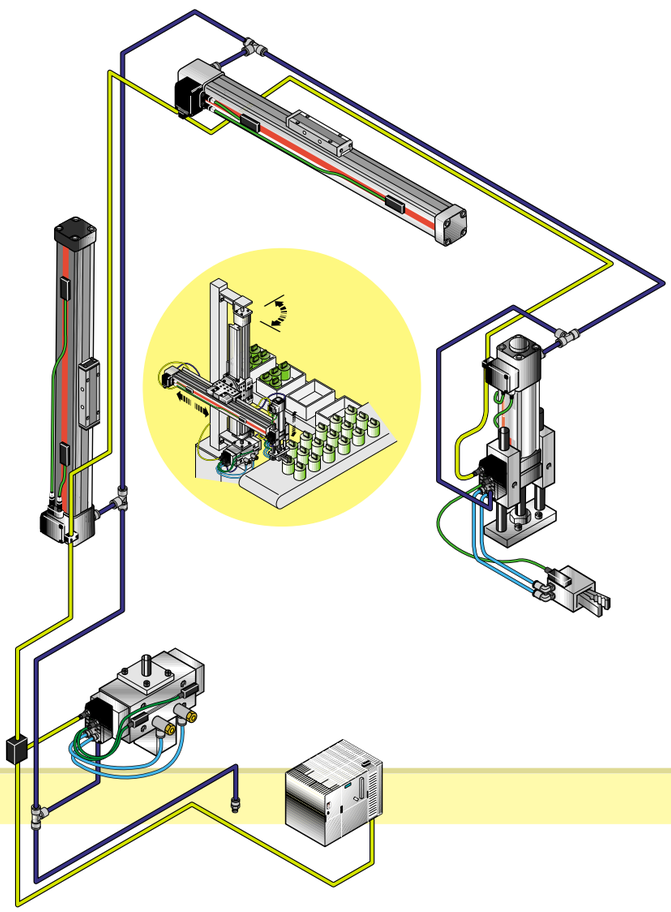

Simple logistics
The completely integrated solution simplifies production logistics and stockholding

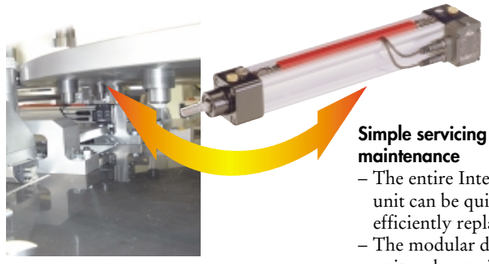

Simple servicing and maintenance
– The entire Interact drive unit can be quickly and efficiently replaced
– The modular design of the unit makes maintenance of the actuator, valves, sensors and electronics very easy.

Simple system design
Reduction of complexity and elimination of control cabinets ensures smaller and simpler machines

Rodless cylinder Series OSP-PI
Origa System Plus standard mountings and options.
Sizes:
25, 32, 40 and 50 mm Stroke lengths up to 6000 mm

AS-Interface
The AS-Interface simplifies communications and programming

Simple diagnosis:
Status and error messages are indicated via LED displays and the PLC

Simple installation
Simple "plug and play"
– No specialised knowledge required
– Prevents incorrect connections

Rod-type cylinder Series AZI
DIN / ISO 6431, VDMA 24562, CETOP RP43P
Standard mountings and options.
Sizes:
32, 40, 50 and 63 mm
in any stroke length

The Product Family

INTERACT
– THE COMPLETE SYSTEM SOLUTION

The Interact product family includes several complete series of Interact actuators and various pneumatic control units with AS-Interface, forming the basis for a wide range of pneumatic applications.

Integrated drive solutions
The Interact Drive Units, Series OSP-PI and AZI, with completely integrated control functions, offer optimum system integration.
They meet the highest demands for performance and for simplified installation and maintenance.

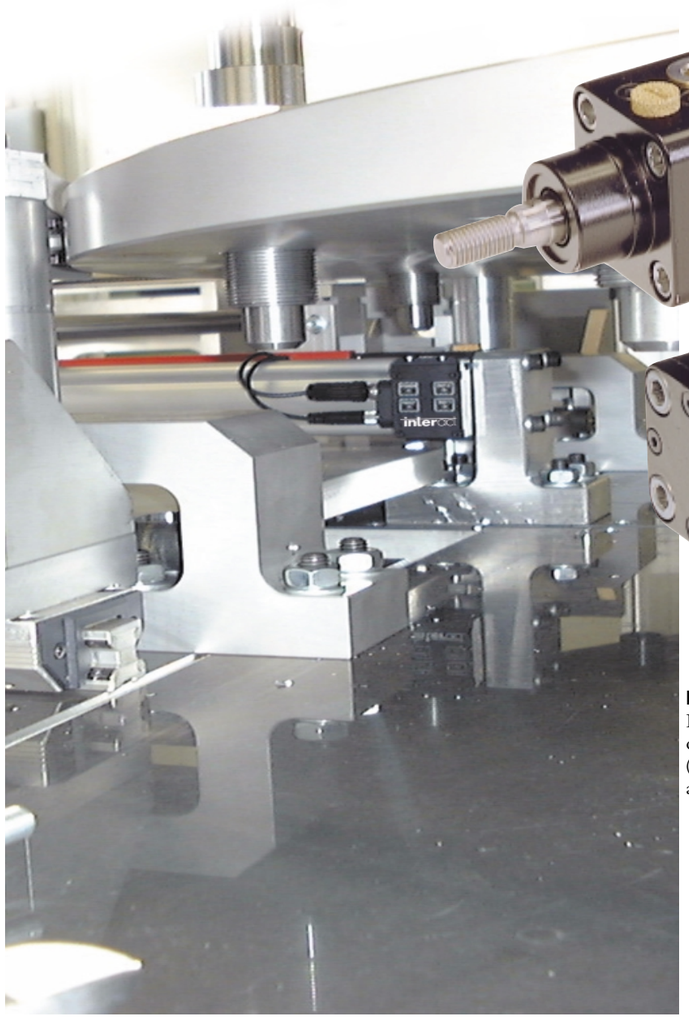

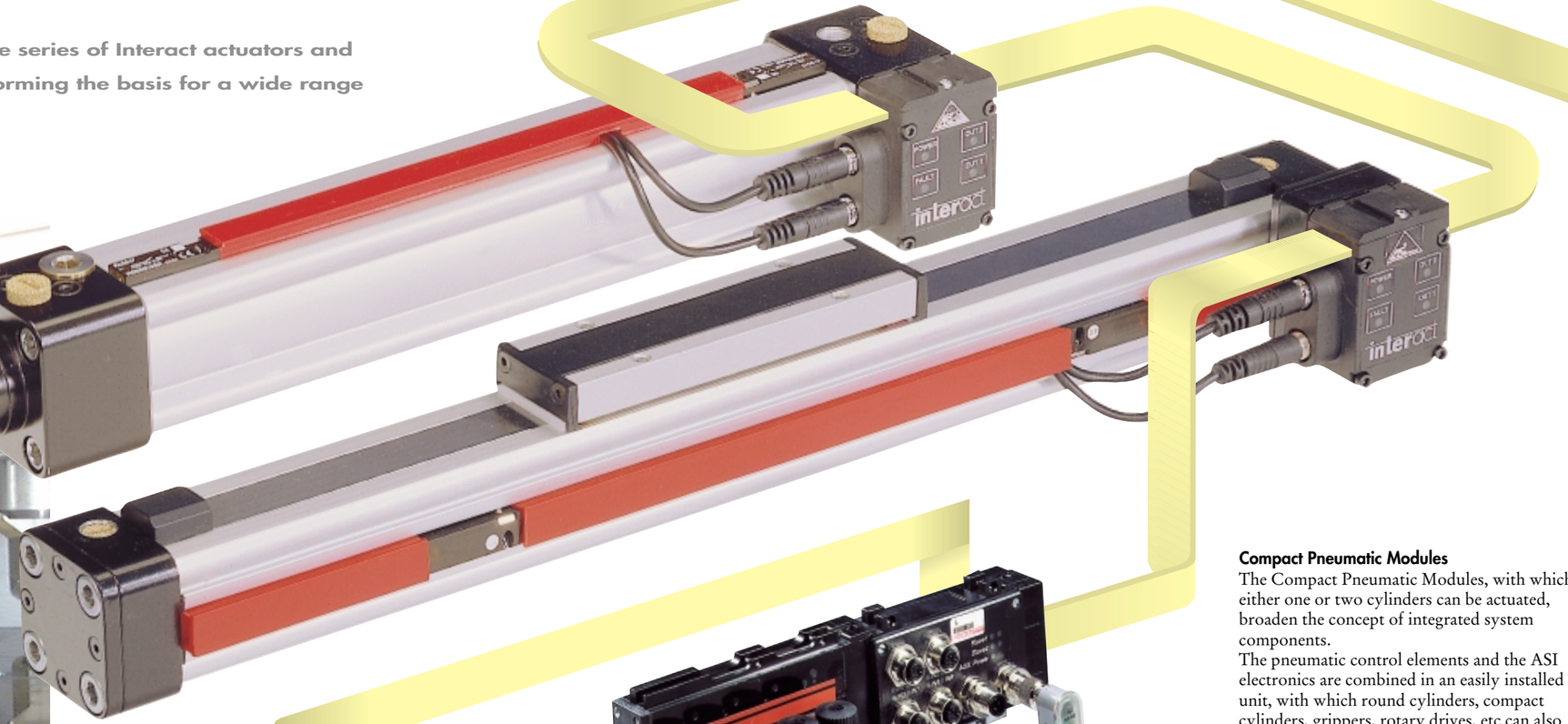

Compact Pneumatic Modules
The Compact Pneumatic Modules, with which either one or two cylinders can be actuated, broaden the concept of integrated system components.
The pneumatic control elements and the ASI electronics are combined in an easily installed unit, with which round cylinders, compact cylinders, grippers, rotary drives, etc can also be operated.

II/O-Modules
I/O-Modules provide control of up to 4 individual valves (for operation of 4 double acting cylinders).

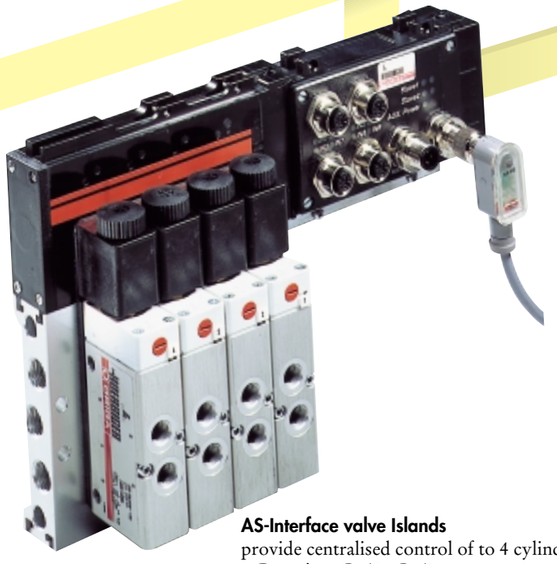

AS-Interface valve Islands
provide centralised control of to 4 cylinders
– Port sizes G1/8 , G1/4
– Available with monstable and bistable valves

WHAT IS AS-INTERFACE

AS-Interface is a simple field bus system developed specially for actuators and sensors, while operable as a stand alone system it also offers cost effective connectivity to higher-level bus systems such as Profibus, Interbus-S CAN etc.
Using a single cable (2-wire technology) ASI is designed to simplify system installations.

Function
ASI is a digital field bus system that networks binary sensors and actuators by means of a single 2-wire cable, through which both the electrical energy supply and the data transfer is transmitted. A single master, normally connected to a PLC, controls the interchange of data, communicating with all stations (actuators and sensors) via the standard AS-I yellow cable.
Connection of the system components with the AS-I cable is by means of a specially developed 'penetration technology' in which contact points penetrate the insulation material. When subsequently removed from the cable, the insulation material closes around the penetrated spot, sealing it completely.

Electrical Protection
Through the self-sealing properties of the ASI cable the system has IP65 protection as standard.
It has IP67 protection if the ends of the ASI cable are closed by protective caps, so that the copper wires are no longer exposed.

System Network
The network topology can be designed as either a tree or a linear structure.
- an arbitrary combination of linear and tree structure is possible

The maximum length of a network with one ASI Power Supply Unit is 100 m.
This can be extended up to 300 m by using a maximum of 2 repeaters per network.

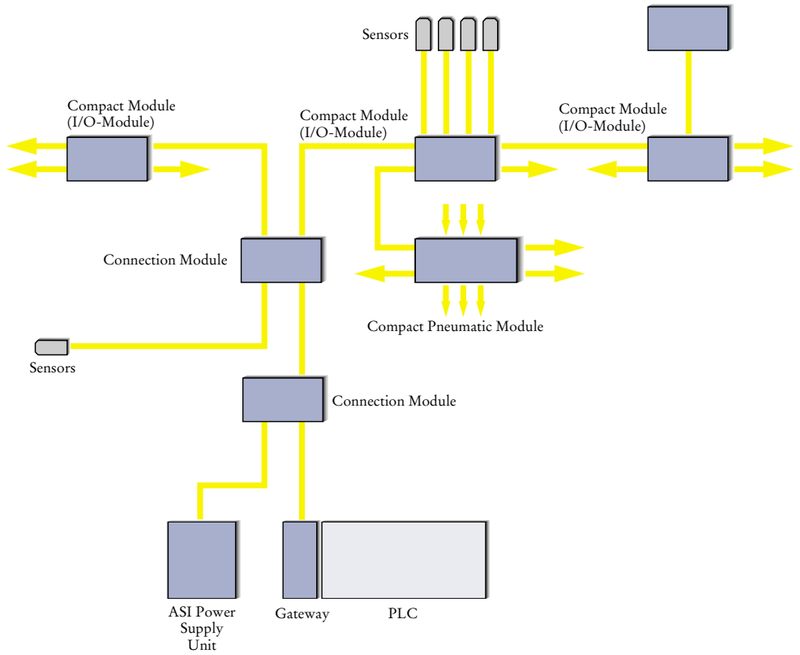

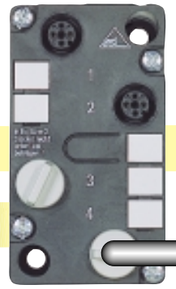

Connection Module
- For connections within an ASI network
- Base plate is ASI cable compatible and offers other connection possibilities
- Free choice of units to be connected
  – I/O module
  – Pneumatic module
  – Cover plate

Addressing Unit
- Used to input or change adresses of ASI components
- Enables data exchange and diagnostics

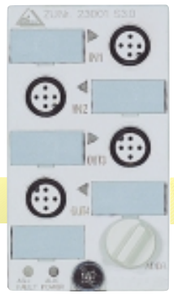

I/O User Module
- Enables standard components to be connected to the ASI network
- Versions
  – With 4 inputs
  – With 4 outputs

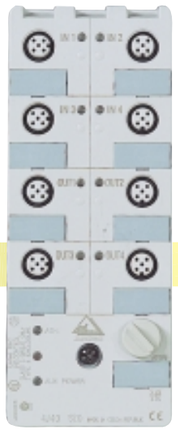

Compact Module (I/O Module)
- Enables standard components to be connected to the ASI network
- Versions
  – With 8 inputs
  – With 8 outputs
  – With 4 inputs and 4 outputs

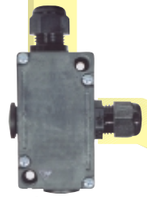

Adaptor
- For connecting an ASI cable to an M12 connector
- for connecting M12 and ASI-cable

T-Connector
- Junction between ASI cable and M12 plug-type connector
- Application
  – If chain link cable trunking is used
  – If alternating loads on the ASI cable are involved

ASI Power Supply Unit
- Provides the correct power supply for the operation of ASI networks
- Available in IP20 and IP65 versions
- Power supply of 2.4 A, 4 A and 7 A

DP/AS-Interface
- The DP/AS-Interface or Gateway provides the connection between the ASI bus system and the higher-level Profibus-DP field bus systems
- Versions with IP20 and IP65 protection

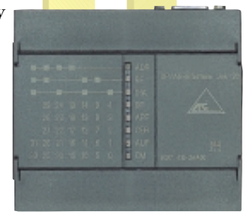

THE ADVANTAGES OF AS-INTERFACE

Advantages

- **Simple system design**
- **Simple installation, commissioning and maintenance**
- **Simple replacement of components without specialised knowledge**

Overview of Cost Reductions

Machine and Component Costs	%-Share of Total Costs (%)	Pneumatic Control Units (%)	Savings with Interact (%)	Total Cost for Interact Solution (%)
Design and Development	10	2	66	0.68
Hardware	17	5	6	5.30
Logistics/Administration	8	3	60	1.20
Manufacturing	25	15	75	3.75
Installation	40	10	90	1.00
Total Costs	100	**35**		**11.93**
Estimated Total Cost Savings				**23.07**

Control System with Interact

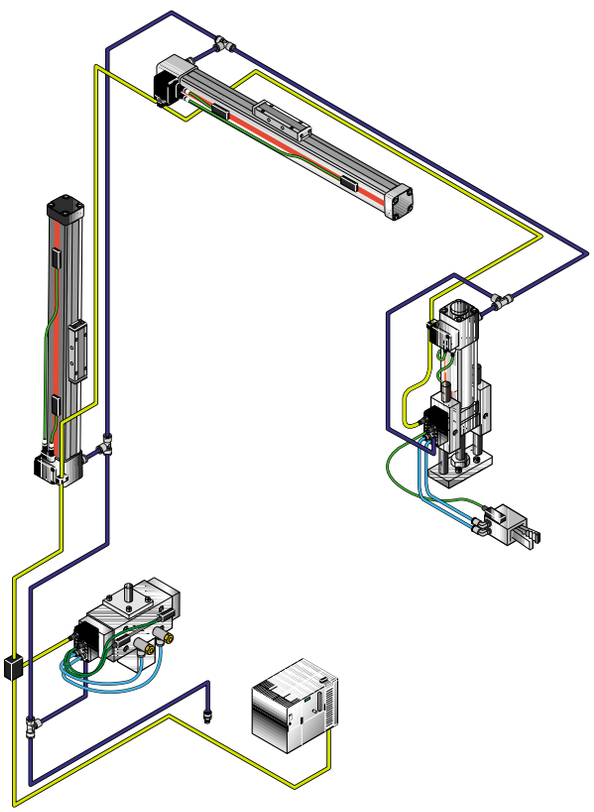

Control System with Conventional Control Units

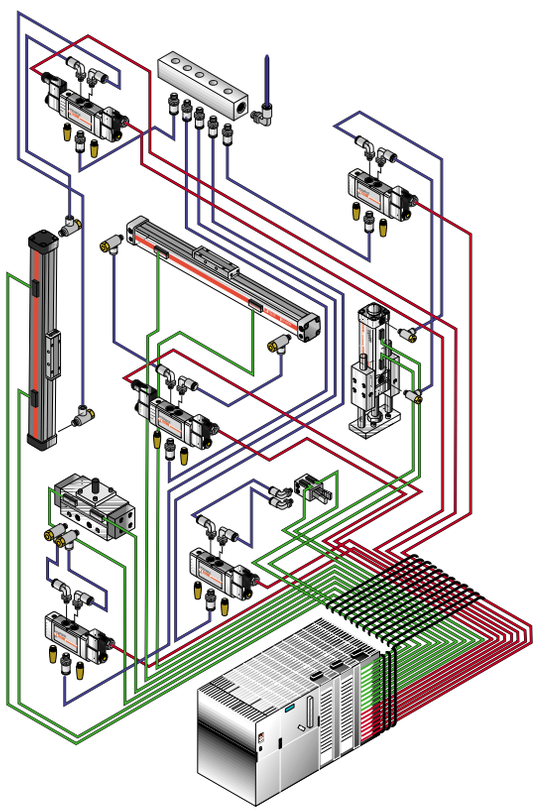

GENERAL INFORMATION

What is AS-Interface?
AS-Interface is a system used in industrial automation since 1994 which enables simple, close-to-process units such as sensors, actuators and control switches to be networked at one control level. It therefore covers a field of applications which cannot, or cannot easily, be handled by the normal field bus systems used in industrial automation. The system is unified worldwide as an international industry standard.

/1/ = Extract from:
"AS-Interface -
The Actuator-Sensor-
Interface for Automation",
Kriesel, Mandelung
– Carl Hanser Verlag,
Munich & Vienna, 1999

Characteristics of the AS-Interface:

Communication principle	Single master system with cyclic polling
Addressing	Every slave has a fixed address via master or addressing unit
Transmission medium	Unshielded and untwisted 2-wire cable for data and energy (24 V DC), typically up to 200 mA per slave, up to 8 A per lane; contact made with penetration technology
Cable length	Max. 100 m, extension by repeaters is possible
Number of slaves	Max. 31 AS-Interface slaves per lane
Number of sensors and actuators	Up to 4 sensors and 4 actuators per slave (max. 248 binary units per ASI lane)
Signals	One-address signal from master with direct response from slave
Usable data	Per signal to slave: 4 bits from master to slave, 4 bits back
Cycle time with 31 slaves	5 ms (shorter with fewer slaves)
Error protection	Effective recognition and immediate repetition of faulty signals
Device interface of the AS-Interface chip	4 configurable inputs/outputs for data, 4 parameter outputs and 2 control outputs
Duties of master	Cyclic inquiry on all units (polling), cyclic data transmission to/takeover from host (PLC, PC) or higher-level field bus
Management functions of master	Initializing of network, identification of units, acyclic assignment of parameter values to units, diagnosis of data transmissions and AS-Interface slaves, error messages to control system, addressing of replaced slaves

I/O Configuration
The data bits available in the ASI protocol can be configured differently from the basic setting according to the ASI specification. The configuration is identified by the so-called "ID Code":

ID Code Table to /1/:

Code	D0	D1	D2	D3
0H	EIN	EIN	EIN	EIN
1H	EIN	EIN	EIN	AUS
2H	EIN	EIN	EIN	E/A
3H	EIN	EIN	AUS	AUS
4H	EIN	EIN	E/A	E/A
5H	EIN	AUS	AUS	AUS
6H	EIN	E/A	E/A	E/A
7H	E/A	E/A	E/A	E/A
8H	AUS	AUS	AUS	AUS
9H	AUS	AUS	AUS	EIN
AH	AUS	AUS	AUS	E/A
BH	AUS	AUS	EIN	EIN
CH	AUS	AUS	E/A	E/A
DH	AUS	EIN	EIN	EIN
EH	AUS	E/A	E/A	E/A
FH	TRI	TRI	TRI	TRI

GENERAL INFORMATION

Glossary:

Interact	Actuator with interface for AS-Interface.
Airbox	Trade name for a complex pneumatic valve control module with AS-Interface slave - depending on the type, the Airbox is also described as a “Pneumatic Module” (with 2 work ports) or as a”Compact Pneumatic Module” (with 4 work ports)
Addressing Unit	Portable hand-held unit for assigning the AS-Interface address to a slave - a special addressing cable is also required.
Addressability	Upper limit of assignment of addresses in an AS-Interface system.
ASI Connection Cable	A specially profiled (trapezoid section) 2-wire flat cable with insulation designed for penetration technology. Colours: yellow for data transmission (and sometimes for energy supply) - black for energy supply.
Valve Connector	Special valve connector similar to Form B (industry standard) to DIN43650 with AS-Interface with integrated AS-Interface slave.
DP/AS-Interface Link	Interface (Gateway) between a Profibus-DP field bus system and the AS-Interface. For connecting the ASI system to a higher-level field bus system.
ASI Power Supply Unit	Power supply unit with voltage conforming to the AS-Interface specification.
Compact Module K...	Digital I/O Module with exclusively electrical functions for connecting actuators and sensors. **The M12 plug-type connectors can be fitted with 2 sensor connections via a Y-cable for fixed function I (input) or O (output).**
Y-Cable	Cable “fork” from M12 (standard I/O connection on ASI units) to 2 x M8 connections (standard connection for e.g. sensors for contactless position sensing on pneumatic cylinders).
Adaptor Cable	Cable connection from M12 (standard connection on ASI units) to one M8 connection (standard connection for e.g. sensors for contactless position sensing on pneumatic cylinders).
AS-Interface Mounting Plate	Base plate for mounting of Compact Modules, including connection technology for ASI flat cables.
Seals for Mounting Plate	Stopper seals for the unused flat cable connection, if connection is to one side only. This provides electrical protection for the whole unit.
AS-Interface Cover Cap	Cap over an unused M12 I/O connection - provides electrical protection.
Sensor Voltage	Energy supply for the sensors: usually generated from the ASI system itself.
Sensor Power Rating	The maximum current permissible for a sensor for its safe functioning. When HOERBIGER-ORIGA sensors are used, this parameter is factory-preset.
Reverse Pole Proof	**Units with this feature cannot be damaged by pole reversal (with DC current) - however, functioning can be seriously affected, e.g. an LED indicator does not work.**
Short Circuit Proof	Units with this feature cannot be damaged by an electrical short circuit, i.e. an overload caused by a short circuit current is excluded.

GENERAL INFORMATION

Interact Drive Units
The Interact Drive Units are compact units into which the valve function and the control electronics are fully integrated. Control is carried out via the AS-Interface.

Control of the Drive Units
The ASI components are controlled and actuated by a PLC and the I/O configuration determines which of the 4/8 bits is responsible for which input/output.
For the Drive Unit, various basic positions are possible. How the Unit is controlled is therefore especially important.

The Drive Units can be controlled via the AS-Interface as follows:
- Both cylinder chambers pressurised (air pressure on both sides of the piston)
- Rear cylinder chamber pressurised, front chamber vented (rod extended)
- Rear cylinder chamber vented, front chamber pressurised (rod retracted)
- Both cylinder chambers vented (no pressure on either side of piston)

Depending on the version, the Drive Unit has one of these basic positions.

Sensors
Either reed or inductive sensors can be used as end switches.
On the Interact Drive Unit, only one sensor per input can be connected with an M8 connector.
Basically Y-connectors cannot be used for the sensor inputs on the Drive Unit, but on other ASI components two sensors can be connected using a Y-connector.
For connecting a standard switch, an M12-to-M8 cable is required; for two sensors on one connection an adaptor cable from M12 to 2 x M8 is needed.

Operation of an Interact Drive Unit without end switches is also possible.

Electrical Protection
The whole ASI system complies with IP65 as standard but the ASI components are also prepared for IP67 and the sensors and electronics comply with IP67.
If all the ASI components are connected to the ASI cable and the cable has an open end (the 2 copper wires exposed) after a component, the system complies with IP65. With protective caps on the cable end, the system complies with IP67.
Drive Units with M12 ASI connection, with the connector plugged in, generally comply with IP67, provided that protective caps are fitted to the sensor connections.

Temperature Range
The temperature range is different for the different ASI components.
It is therefore important to take into account the lowest temperature range for a particular application. Units should be located carefully to make the best use of the permissible temperature range.

WHICH ACCESSORIES FOR WHICH ASI COMPONENT?

Accessories for Airbox and I/O Modules
For these standard components the following accessories can be used:

Y-Cable:
for connecting
2 sensors to one sensor input (check type of sensor connection).

Cover Plug:
to cover unused M12 connections

Panel:
for wall or top hat rail mounting

ASI Valve Island
The valve island is connected to the AS-Interface with a normal M12 plug-type connector.
This requires:
1 M12 round cable with M12 connector
1 ASI M12 Connection Module

Pg Connection Module
The Pg Connection Module is used for connecting up the ASI network. It enables either an ASI flat cable or a round cable to be connected. When a flat cable is used, a specially profiled Pg seal replaces the normal Pg11 seal.

ASI M12 Connection Module
Because ASI flat cables do not stand up well to alternating loads, they should not be laid in chain-link trunking.
This area should always be bridged with a normal ASI-compliant round cable.
The ASI M12 Connection Module is used to connect the two cables.

Addressing Unit
The Addressing Unit is used to assign an address to each ASI component.
The standard components in the K-Series (I/O Modules, Pneumatic Modules) can be addressed direct via the addressing socket with the standard cable. The Interact Drive Units can be addressed with the special cable supplied (consisting of the M12 Connection Module with M12 connection and ASI cable).

Power Supply Unit
When designing an ASI network it is important to determine the total power consumption so that the correct ASI Power Supply Unit can be selected.
If the total power exceeds 7A, a separate power supply must be provided for the ASI components .
Power is then supplied via the black ASI flat cable.
In addition to the I/O Modules and Pneumatic Modules (Airboxes), the ASI connection and the individual valves can be supplied with their own power via the black ASI cable.
The ASI valve islands can be supplied with their own power via an M12 connection.

Drive Units Overview

interact

	Page
General Information	
• Rodless pneumatic cylinders with integrated valve Series OSP-PI	15
• Rod-type pneumatic cylinders with integrated valve Series AZI	15
Technical Data, Dimensions, Order Instructions	
• Rodless pneumatic cylinders with integrated valve Series OSP-PI	16-19
• Rod-type pneumatic cylinders with integrated valve Series AZI	20-22
Overview of Other Interact Components	23
Overview of Interact Accessories	33

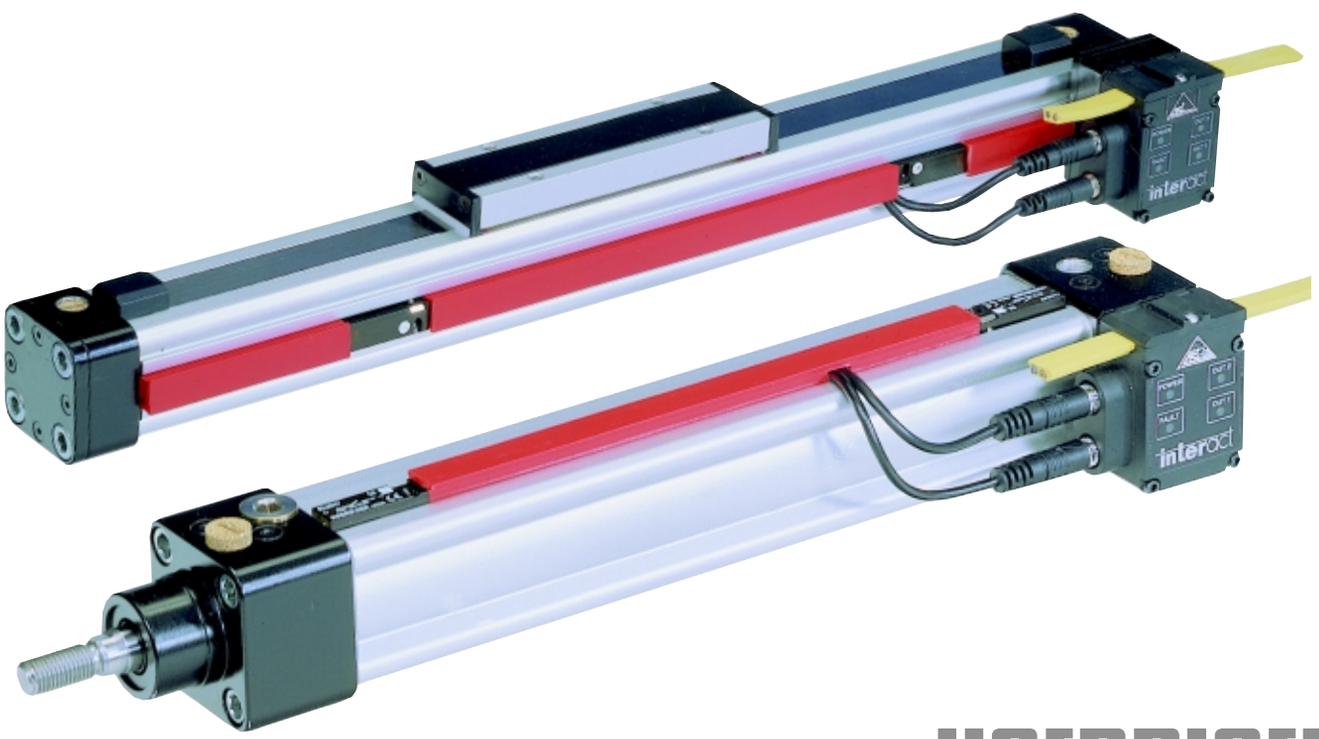

HOERBIGER ORIGA

Drive Units
General Information

Interact Drive Units
Interact Drive Units are system solutions in which the valve, speed regulation system, electronic control system and sensors are all integrated with the linear drive.
Two different Series are available:
- Rodless Drive Units
  Series OSP-PI
- Rod-Type Drive Units
  Series AZI

Basic Drive Unit Positions
The various Drive Unit positions are automatically determined by the various integrated valves.

With the rodless Drive Unit only one basic position is possible:
- Piston pressurized both sides

With the rod-type Drive Unit four basic positions are possible:
- Rod retracted
  (front end pressurised)
- Rod extended
  (rear end pressurised)
- Piston pressurised both sides
- Piston vented both sides

Function Check and Speed Regulation
A function check should be carried out on the Drive Unit before installation, using an Addressing Unit.
The Addressing Unit can also be used to check each component with its address and to read and set the data.

The data settings are used to actuate the Drive Unit, controlling the extend and retract movements of the drive. The operating speed in both directions of travel can be regulated while carrying out the function check.

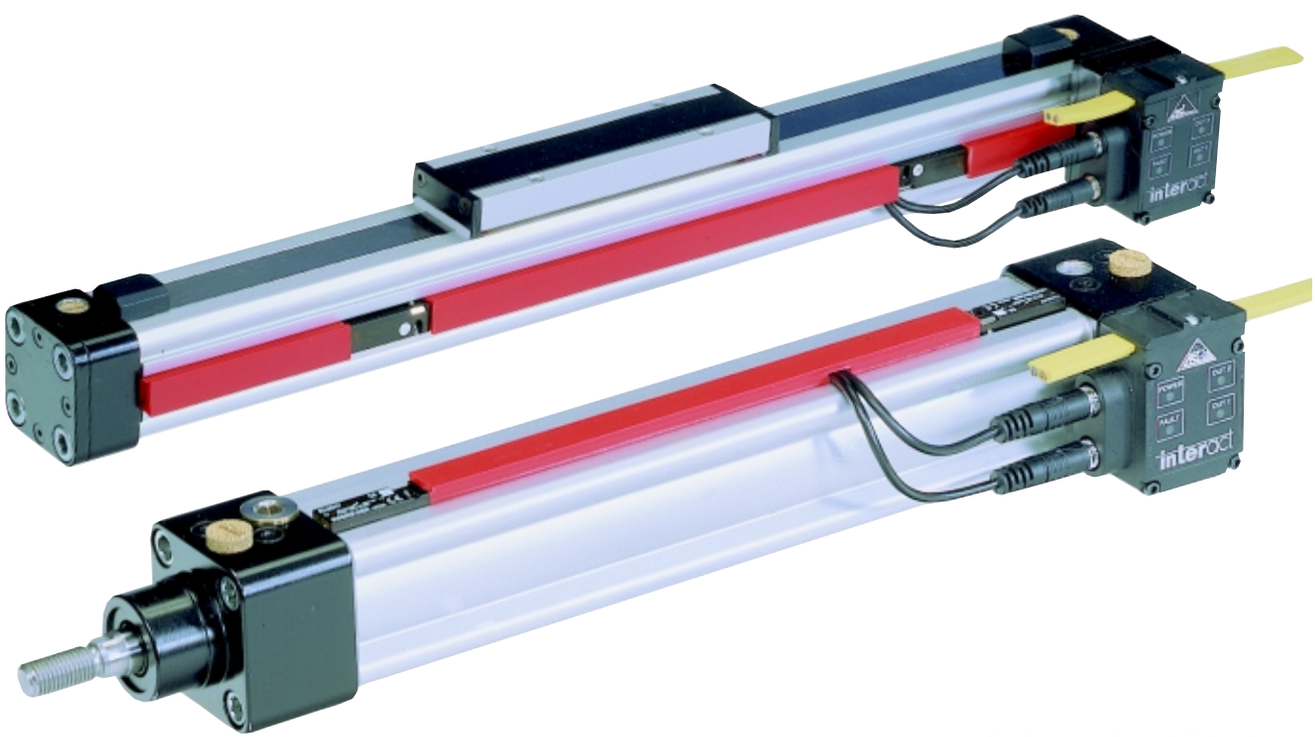

interact

Drive Unit

consisting of – rodless pneumatic cylinder – integrated valve, actuated by an ASI field bus system

Ø 25 – 50 mm

OSP
ORIGA SYSTEM PLUS

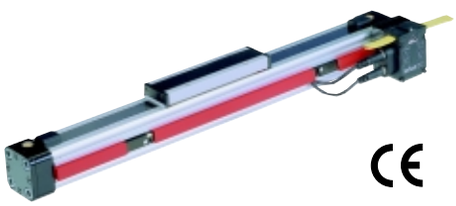

CE

Series: OSP-PI

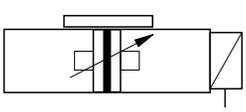

Standard Version:
- double acting with adjustable end cushioning
- 2 sensors for end position sensing
- integrated valve and integrated exhaust throttles for speed regulation
- exhaust silencers
- integrated interface for Actuator-Sensor-Interface (ASI)

Special Versions:
- tandem piston
- slow-speed grease

Application:
The Drive Unit is especially suitable for decentral applications. The complete control system and energy supply require only one electrical and one pneumatic connection.

HOERBIGER ORIGA

Technical Data (Pressures are gauge pressures)

Parameter		Symbol	Unit	Comments			
General							
Description				Rodless cylinder with integrated valves and actuation by ASI field bus system			
Product family				Interact & OSP-P Cylinder Series			
Mountings				See OSP-P Catalogue A4P011E			
Ambient and medium temperature range			°C	-10 to +60 (*			
Weight (mass)			kg	See table			
Materials	Cylinder tube			Aluminium, anodized			
	Carrier (piston)			Aluminium, anodized			
	End caps			Aluminium, anodized			
	Sealing bands			Stainless steel			
	Seals			NBR			
	Screws			Steel, zinc-plated			
	Covers, wipers, electronics housing			Plastic			
Medium				Filtered (30µm), unlubricated air (other media on request)			
Lubrication				Supplied with lifetime lubrication (further oil mist lubrication not required) Option: slow-speed grease			
Installation				In any position			
Pneumatic Parameters							
Operating pressure range		p_{min} p_{max}	bar bar	2 8			
Eff.force/cush.length Max.load/max.moments				See OSP-P Catalogue A4P011E Data Sheet 1.10.002E			
Piston diameters			mm	25	32	40	50
Port sizes				G1/8	G1/8	G1/4	G1/4
Stroke lengths			mm	Up to 6000 in 1 mm steps (longer strokes on request)			
Cushioning diagram / Mid-sect.supp.loading				See OSP-P Catalogue A4P011E Data Sheet 1.10.002E			
Electrical Parameters							
Connection type				Electrical via ASI profile cable Electrical via M12 connector			
Working principle				Via AS-Interface			
Operating voltage			V	26.5 – 31.6 DC			
Data I/O configuration				3h			
ASI specification ID code				Fh			
Total power usage			mA	< 80			
Reverse pole proof				Yes			
Sensor voltage			V	Via ASI input voltage Short circuit proof			
Sensor power rating			mA	Max. 10 per Sensor			
Input voltage			V V	For signal „0“ :< 4 For signal „1“: > 10 (> 1.2 mA)			
Status indication				Via LED			
Protection system (**			IP	65 with cable 67 with M12 connector			
Adressability				max. 15			

(* for use in other temperature ranges please consult us
(** applies only to the electronics – for the drive, check the functioning

Pneumatic Control Versions

Basic Position
Piston pressurised both sides

Weight (Mass) [kg]

Cylinder with Mounting	Piston Diameter (mm) 25	32	40	50
/100mm Stroke	0.197	0.354	0.415	0.566
Basic cylinder with stroke = 0	0.85	1.64	2.15	3.73

Dimensions of Basic Cylinder – Series OSP-PI 25 and OSP-PI 32

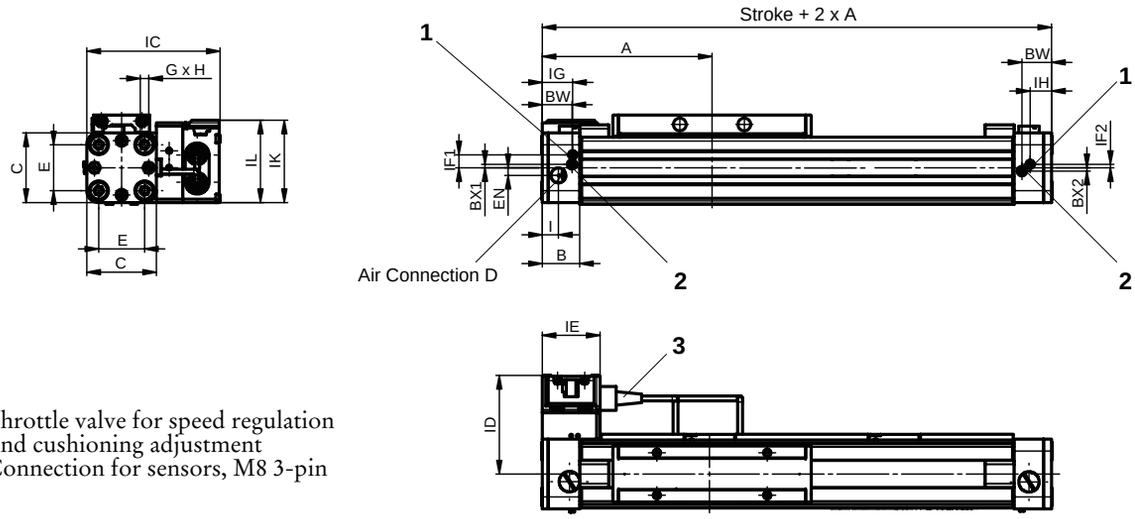

1 = Throttle valve for speed regulation
2 = End cushioning adjustment
3 = Connection for sensors, M8 3-pin

The OSP-PI end caps cannot be turned round.
For further dimensions see Data Sheet 1.10.002E, Series OSP-P in Catalog A4P011E

Dimensions of Basic Cylinder – Series OSP-PI 40 and OSP-PI 50

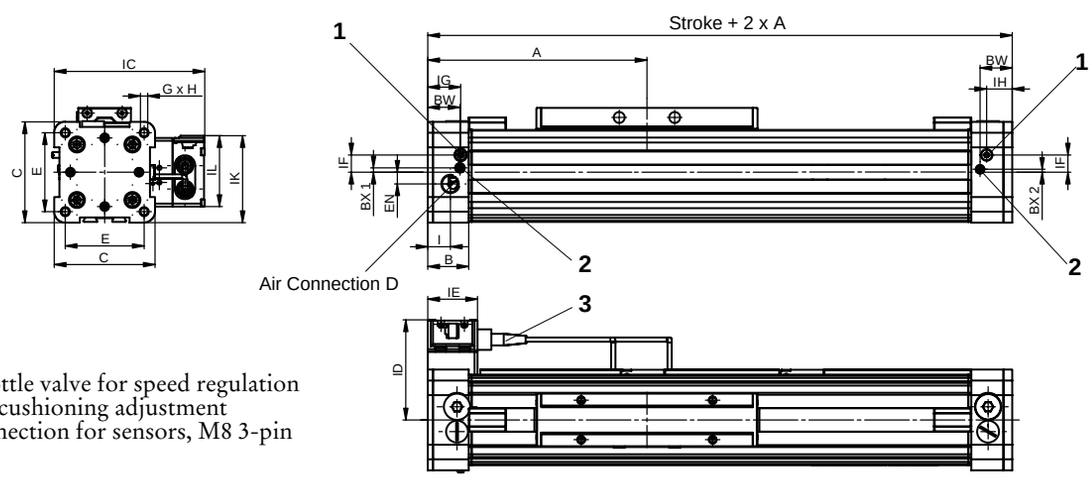

1 = Throttle valve for speed regulation
2 = End cushioning adjustment
3 = Connection for sensors, M8 3-pin

The OSP-PI end caps cannot be turned round.
For further dimensions see Data Sheet 1.10.002E, Series OSP-P in Catalog A4P011E

Basic Cylinder Dimensions – Series OSP-PI 25 to OSP-PI 50

Type	A	B	C	D	E	G	H	I	BX1	BX2	BW	EN	IC	ID	IE	IF1	IF2	IG	IH	IL	IK
OSP-PI25	100	22	41	G 1/8	27	M5	15	9.5	2	2	17.5	4.5	78.5	58	34	7.6	3	18	12.6	48.5	48.5
OSP-PI32	125	25.5	52	G 1/8	36	M6	15	12.5	0.5	-	20.8	7	89.5	63.5	34	5.5	4.4	19	13	48.5	50
OSP-PI40	150	28	69	G 1/4	54	M6	15	15.5	3	2	22	8	103	68.5	34	11.8	11.8	22,5	17.5	48.5	59.5
OSP-PI50	175	33	87	G 1/4	70	M6	15	17	4.5	4.5	27	6	115.5	72	34	14	14	23	23	48.5	68.5

Order Instructions

	OSP-PI	25	–	0	0	0	0	0	0	0	– 01000

Piston Diameter	
25	25 mm
32	32 mm
40	40 mm
50	50 mm

Piston or Carrier	
0	Standard
1	Tandem

Type of Lubrication	
0	Standard
1	Slow-speed grease

Sensors	
0	RS sensors
1	ES PNP sensors

Electronic Connection	
0	ASI profile cable
1	M12 connector

Cushioning Spigot	
0	Standard

Stroke length
Enter in mm (5 digits)

Guides / Brakes	
0	None
1	Slideline (plain bearing)
2	Slideline Active Brake
3	Multi-Brake Slideline
4	Multi-Brake Slideline with wear sensor
5	Proline (roller guide)
6	Proline Active Brake
7	Multi-Brake Proline
8	Multi-Brake Proline with wear sensor
9	Active Brake
A	Inversion bracket

Spare field	
0	not definded

Accessories – please order separately

Description	For Further Information See Data Sheet No.
Flexible carrier	**1.45.002E** in Catalog A4P011E
End cap mounting	**1.45.003E** in Catalog A4P011E
Mid-section support	**1.45.004E** in Catalog A4P011E
Mounting rail	**1.45.007E** in Catalog A4P011E
T-slot rail	**1.45.008E** in Catalog A4P011E

OSP-PI Guides, Brakes and Piston Accessories

Description	For Further Information See Data Sheet No.
Slideline plain bearing guide with / without brake	**1.40.002E** in Catalog A4P011E
Multi-Brake passive brake with Slideline plain bearing guide	**1.42.003E** in Catalog A4P011E
Proline aluminium-roller guide with / without brake	**1.40.005E** in Catalog A4P011E
Multi-Brake passive brake with Proline aluminium-roller guide	**1.42.004E** in Catalog A4P011E
Active Brake	**1.42.002E** in Catalog A4P011E
Inversion bracket	**1.45.006E** in Catalog A4P011E

Recommendations for the Use of End Cap Mountings

Description	Type	OSP-PI without Guides				OSP-PI with SLIDELINE PROLINE MULTIBRAKE			
Size		25	32	40	50	25	32	40	50
End cap mounting	A1	+	+						
	A2					O	O		
	A3								
End cap mounting reinforced	B1								
	B3								
	B4	⊗				X			
	B5		⊗				X		
End cap mounting	C1			+	+				
	C2							O	O
	C3				⊗				X
	C4			⊗				X	
Mid-section support, narrow	D1	+	+	+	+				
Mid-section support, wide	E1	+	+	+	+				
	E2					O	O	O	O
	E3			⊗					X
	E4	⊗			⊗	X		X	
	E5		⊗				X		

For further information see Data Sheet 1.45.005 in Catalogue A4P011E

X = Guide carriage on top (12 o'clock position)
O = Guide carriage at side (3 or 9 o'clock position)
+ = Piston (carrier) on top (9 o'clock position)
⊗ = Piston (carrier) at side (3 or 9 o'clock position) and electronics underneath (6 o'clock position)

= components available

interact

Drive Unit

consisting of:
– rod-type pneumatic cylinder
– integrated valve, actuated by an ASI field bus system

Ø 32 – 63 mm

CE

Series: AZI

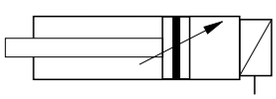

Standard Version:
- double acting with adjustable end cushioning
- 2 sensors for end position sensing
- integrated valve and integrated exhaust throttles for speed regulation
- exhaust silencers
- integrated interface for Actuator-Sensor-Interface (ASI)

Application:
The Drive Unit is especially suitable for decentral applications. The complete control system and energy supply require only one electrical and one pneumatic connection.

(* for use in other temperature ranges please consult us

(** applies only to the electronics – for the drive, check the functioning

HOERBIGER ORIGA

Technical Data (Pressures are gauge pressures)

Parameter	Symbol	Unit	Comments			
General						
Description			Rod-type cylinder with profile tube and valve actuation by ASI field bus system			
Product family			Interact and AZ Cylinder Series			
Mountings			All mounting dimensions to ISO6431, CETOP RP43P and VDMA24562. See Data Sheet 2.29.001E in Catalogue A4P002E			
Ambient and medium temperature range		°C	-10 to +60 (*			
Weight (mass)		kg	See table			
Materials: Cylinder tube			Aluminium, anodized			
Materials: End caps			Aluminium, anodized			
Materials: Piston rod			Stainless steel			
Materials: Seals			NBR			
Materials: Screws			Steel, zinc-plated			
Materials: Covers, wipers, electronics housing			Plastic			
Medium			Filtered compressed air, lubricated orunlubricated			
Lubrication			Oil mist lubrication, compatible with NBR			
Installation			In any position			
Pneumatic Parameters						
Operating pressure range	p_{min} p_{max}	bar bar	2 8			
Effective force at p_n			See Data Sheet 2.05.001E			
Air consumption at nominal pressure			See Data Sheet 2.05.001E			
Piston diameters		mm	32	40	50	63
Port sizes			G1/8	G1/8	G1/4	G1/4
Piston rod diameters		mm	12	16	20	20
Piston rod threads			M10x1.25	M12x1.25	M16x1.5	M16x1.5
Stroke lengths		mm	From 10 to 2500 in 1 mm steps			
End cushioning			At both ends, steplessly adjustable			
Cushioning length		mm	21	25	28	30
Electrical Parameters						
Connection type			Electrical via ASI profile cable Electrical via M12 connector			
Working principle			Via AS-Interface			
Operating voltage		V	26.5 – 31.6 DC			
Data I/O configuration			3h			
ASI specification ID code			Fh			
Total power usage		mA	< 80			
Reverse pole proof			Yes			
Sensor voltage		V	Via ASI input voltage Short circuit proof			
Sensor power rating		mA	Max. 10 per Sensor			
Input voltage		V V	For signal „0“: < 4 For signal „1“: > 10 (> 1.2 mA)			
Status indication			Via LED			
Protection system (**		IP	65 with cable 67 with M12 connector			
Adressability			max.15			

Pneumatic Control Versions

Basic Position	
21	Rod retracted – front end pressurised
22	Rod extended – rear end pressurised
32	Piston pressurized both sides – both ends pressurised
33	Piston vented both sides – both ends vented

Weight Mass [kg]

Cylinder with Mounting	Piston Diameter (mm) 32	40	50	63
/100mm stroke	0.2	0.312	0.422	0.532
Basic cylinder with stroke = 0	0.66	1.2	1.7	2.25
A	0.85	1.35	1.8	2.55
B	0.75	1.2	1.65	2.35
BA	0.85	1.3	1.7	2.55
BAS	0.8	1.3	1.79	2.45
C – D	0.8	1.2	1.65	2.4
EN	1.05	1.8	2.4	4.5

Basic Cylinder Dimensions – Series AZI5032 to AZI5063

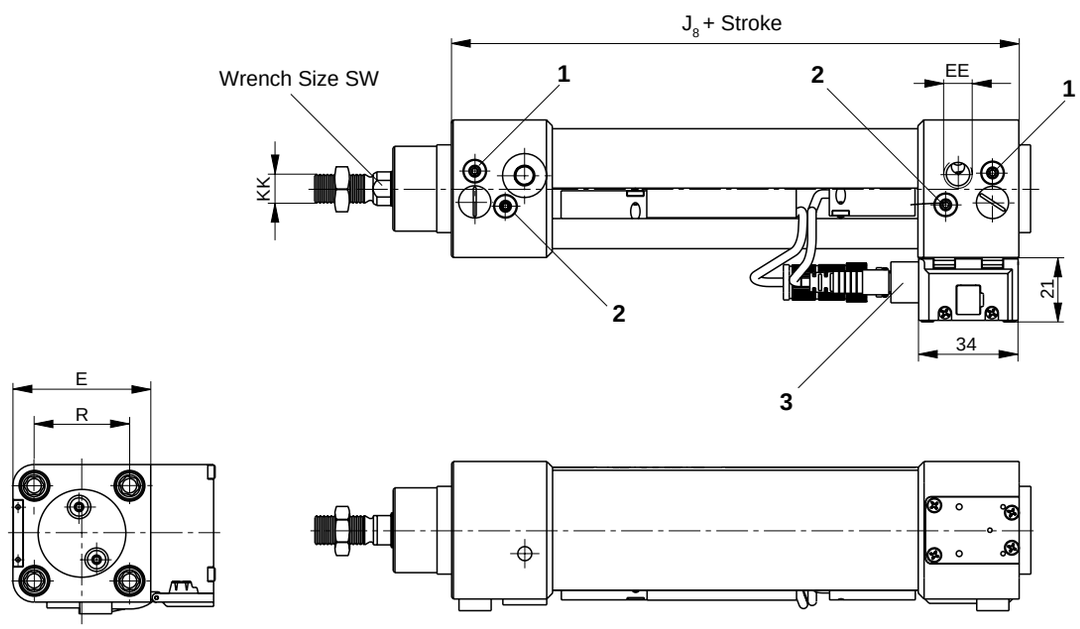

1 = Throttle valve for speed regulation
2 = End cushioning adjustment
3 = Sensor connection, M8 3-pin

For further dimensions see Data Sheet 2.29.001E, Series AZ in Catalog A4P002E

Basic Cylinder Dimensions (mm) – Series AZI5032 to AZI5063

Type	J_8+Stroke	E	R	EE	KK	SW
AZI 5032	94	47	32,5	G1/8	M10x1,25	10
AZI 5040	105	55	38	G1/4	M12x1,25	13
AZI 5050	106	65	46,5	G1/4	M16x1,5	17
AZI 5063	121	78	56,5	G3/8	M16x1,5	17

Order Instructions

Type	AZI50	32	0250	21	0	0	1						Symbol

Piston Diameter	
32	ø32 mm
40	ø40 mm
50	ø50 mm
63	ø63 mm

Stroke length (mm)
1 to 3200 mm
Enter 4 digits

Valve Function/ Basic Cylinder Position	
21	Piston Rod retracted
22	Piston Rod extended
32	Middle position pressurized
33	Middle position vented

Sensors	
0	RS sensors
1	ES PNP sensors

Electronic Connection	
0	ASI profile cable
1	M12 connector

Series Index	
1	

Type label
No entry HOERBIGER-ORIGA Type label

Options

Type of Lubrication
No entry – Standard Spezial lubrication on request

Seals
No entry – Standard Seales for special applications on request

Piston Rod material
No entry – Standard other materials on request

Piston Rod lengthened
No entry – Standard

Interact Components Overview

interact

	Page
Compact Modules	
• pneumatic with complete valve actuation system via ASI	24, 25
User Modules	
• pneumatic with complete valve actuation system via ASI	26, 27
Valve Islands	
• valve actuation system via ASI	28, 29
Valve Connectors for Directional Valves, S9 Series	
• with AS-Interface for valve actuation via ASI bus system	30, 31
Interact Accessories, see Overview	33

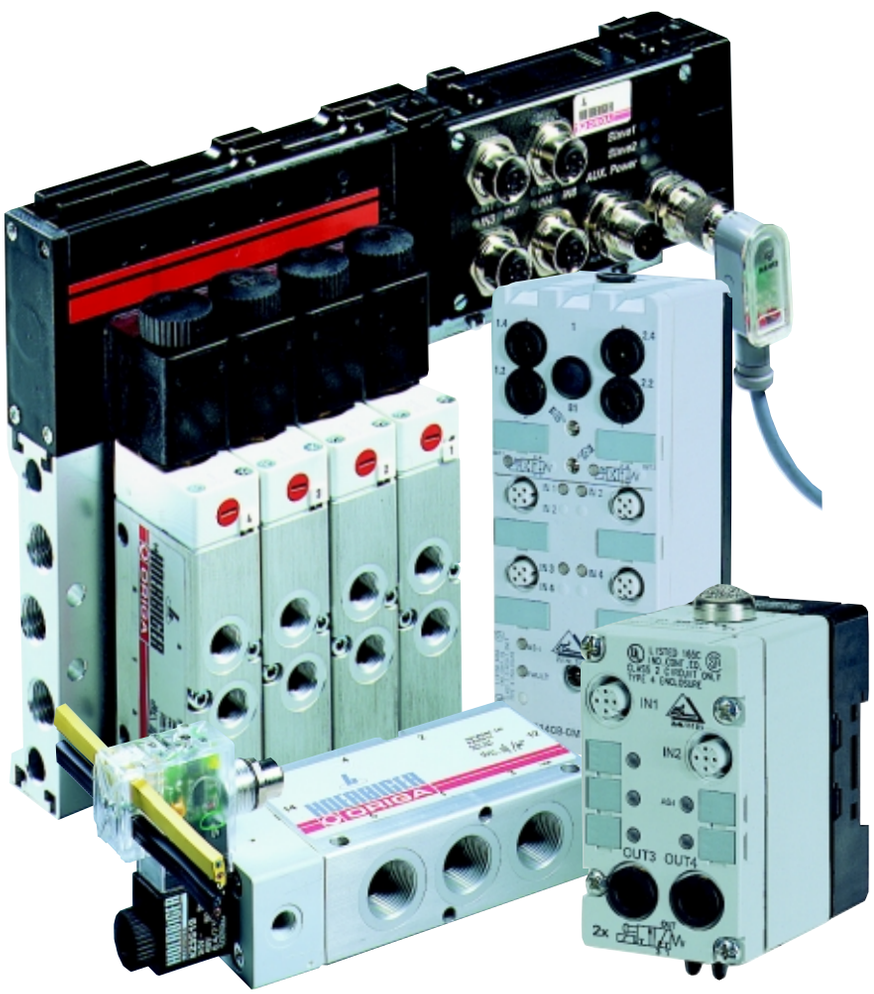

HOERBIGER ORIGA

interact

Compact Pneumatic Module

(Airbox 04)

with complete valve actuation system via Actuator-Sensor-Interface (ASI)

Application:
The Airbox 04 is used for the control of pneumatic actuators in the Actuator-Sensor-Interface system.

Versions:
2 outputs for monostable 4/2 way valve and 4 sensor inputs
or
2 outputs for bistable 4/2 way valve and 4 sensor inputs

Electrical connections:
– black ASI flat cable (energy supply)
– yellow ASI flat cable (signal line)

Pneumatic connections:
plug-type

Certifications available for:
AS-Interface
UL
CSA
Shipbuilding

HOERBIGER ORIGA

Technical Data

Parameter		Symbol	Unit	Comments
General				
Description				Pneumatic module – pneumatic actuation via AS-Interface
Product family				Interact
AS-Interface chip				SAP4
Mounting				Wall or DIN rail mounting
Ambient temperature range			°C	-10 to +55
Manual actuation				Fitted (recessed)
Materials	Base plate			Aluminium
	Seals			NBR
	ASI module housing			Plastic
Medium				Filtered compressed air (5µm), lubricated or unlubricated
Lubrication				With or without oil mist lubrication
Installation				In any position
Pneumatic Parameters				
Nominal pressure		p_n	bar	6
Operating pressure		$p_{min/max}$	bar	2.0 to 8 (+ 90% vacuum)
Working principle				Integrated slave for valve actuation via ASI-Interface
No. of switching outputs				2 x 4/2 way valves
No. of sensor inputs				4 connectors, M12x1
Compr. air connection			mm	Tubing 8 mm OD
Valve nominal diameter			mm	5
Nominal flow rate		Q_N	Nl/min	550 per valve (800Nl/min total)
Electrical Parameters				
Bus connection				Via ASI flat cable
Input connections				M12 connector 5-pin (Y-adaptor needed)
Protection system			IP	67
Sensor power supply				Via AS-Interface (short circuit proof)
Operating voltage DC			V	Signal: 26.5... 31.6 / Power: 24
Data I/O configuration				3h
ASI specification ID code				Fh
Total power usage			mA	< 200
Addressability				Max. 15
Sensor power rating			mA	Max. 100 – short circuit proof
M12 connector pin assignment (PNP)				1 = L+ 3 = L- 5 = earth 2 and 4 = data inputs

Circuit Diagram

Outputs not switched

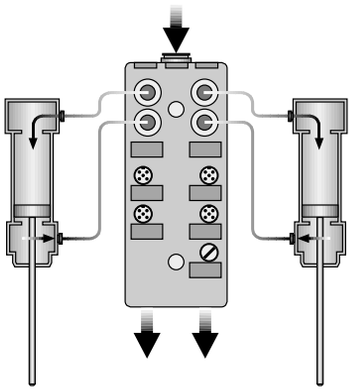

Outputs switched

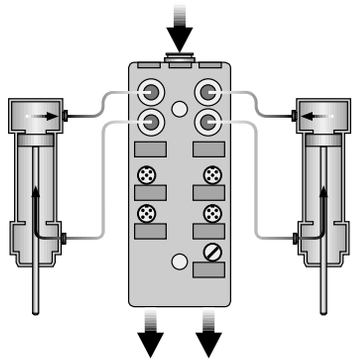

Status Indicators

Yellow LED = switching status
Green LED = AS-Interface voltage
Red LED = Fault

Order Instructions

Description	Item	Order Data Type	Order No.
Airbox 04 (Version M) – set comprising items 2 to 6	1		**PD45841**
Compact pneumatic module (4/2 way valve, monostable)	2	**AB-AS-04-M**	**KL3127**
Mounting plate for flat cable connection	3	**AB-G-04**	**KL3123**
Snap foot for DIN rail mounting	4	**AB-H-04**	**KL3124**
ASI cover cap, M12 (pack of 10)	5	**AB-V-M12**	**KL3121**
ASI seals for flat cable 5 x straight, 5 x profiled	6	**AB-D-V**	**KL7110**
Airbox 04 (Version J) – set comprising * items 8 to 12	7		**PD45842**
Compact pneumatic module (4/2 way valve, bistable)	8	**AB-AS-04-J**	**KL3128**
Mounting plate for flat cable connection	9	**AB-G-04**	**KL3123**
Snap foot for DIN rail mounting	10	**AB-H-04**	**KL3124**
ASI cover cap, M12 (pack of 10)	11	**AB-V-M12**	**KL3121**
ASI seals for flat cable	12	**AB-D-V**	**KL7110**

*** The valve positions can only be guaranteed with continuously operating pilot air. The pilot pressure must be maintained, even in case of an emergency stop (as the pilot air does not transfer any energy to the actuators, this is allowed).**

interact

Pneumatic Module

(Airbox 02)

with complete valve actuation system via Actuator-Sensor-Interface (ASI)

Application:
The Airbox 02 is used for the control of pneumatic actuators in the Actuator-Sensor-Interface system.

Version:
2 monostable 3/2 way valves
2 sensor inputs

Electrical Connections:
– black ASI flat cable (energy supply)
– yellow ASI flat cable (signal line)

Pneumatic connections:
plug-in type

Certifications available for:
AS-Interface
UL
CSA
Shipbuilding

Technical Data

Parameter		Symbol	Unit	Comments
General				
Description				Pneumatic user module – pneumatic actuation via AS-Interface
Product family				Interact
AS-Interface chip				ASI3+
Mounting				Wall or DIN rail mounting Coupling module (order separately)
Ambient temperature range			°C	-10 to +55
Manual actuation				Fitted (recessed)
Material	Mounting plate			Aluminium
	Seals			NBR
	ASI module housing			Plastic
Medium				Filtered compressed air (5µm), lubricated or unlubricated
Lubrication				With or without oil mist lubrication
Installation				In any position – on base plate
Pneumatic Parameters				
Nominal pressure		p_n	bar	6
Operating pressure		$p_{min/max}$	bar	2.0 to 8
Working principle				Integrated slave for valve actuation via ASI-Interface
No. of switching outputs				2 x 3/2 way valves
Compr. air connection			mm	Tubing 8 mm OD
Valve nominal diameter			mm	4
Nominal flow rate		Q_N	Nl/min	400
Exhaust				Via sintered filter
Electrical Parameters				
Bus connection				Via ASI flat cable
Input connections				2 x M12 connectors, 5-pin
Protection system			IP	65
Working principle				Via ASI master
Operating voltage DC			V	Signal: 26.5 ... 31.6 / Power: 24
Data I/O configuration				3h
ASI specification ID code				Fh
Total power usage			mA	< 100
Addressability				Unlimited
Sensor power supply				Via AS-Interface
Sensor power rating			mA	Max. 100 – short circuit proof
M12 connector pin assignment (PNP)				1 = L+ 2 = L– 5 = spare 2 and 4 = data inputs

HOERBIGER ORIGA

Circuit Diagram

Outputs not switched

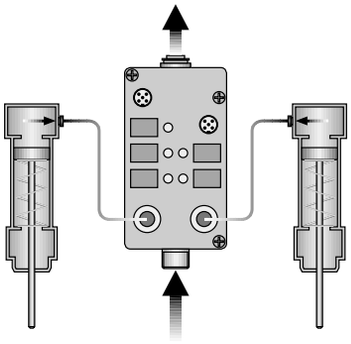

No output switched
D-3 = 0 D-4 = 0

Outputs switched

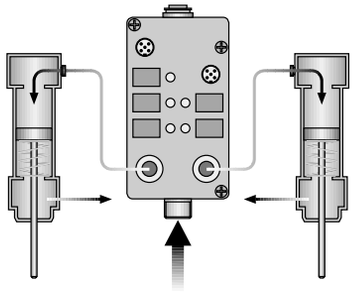

Both outputs switched
D-3 = 1 D-4 = 1

Status Indicators

Yellow LED = switching status

Green LED = AS-Interface voltage

Order Instructions

Description	Item.	Order Data Type	Order No.
Airbox 02 – set comprising items 2 to 5	1		**PD45840**
Pneumatic user module for 2 x 3/2 way valves, monostable	2	**AB-AS-02-M**	**KL3125**
Coupling module FK	3	**AB-AS-FK**	**KL3126**
ASI cover cap, M12 (pack of 10)	4	**AB-V-M12**	**KL3121**
ASI seals for flat cable 5 x straight, 5 x profiled	5	**AB-D-V**	**KL7110**

interact

Valve Island

Valve actuation via Actuator-Sensor-Interface (ASI)

G1/8, G1/4

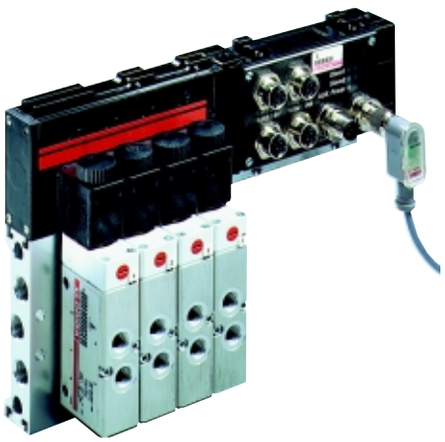

Series: IM20-..-AS-04-4.S8

Interact valve islands are available with G1/8 and G1/4 valves. They have 8 sensor inputs and are equipped with 4 monostable or bistable valves.

Application:
The valve island is especially suitable for central applications. The control system connection is via the yellow ASI cable and the energy supply is via the black ASI cable by means of an M12 connector (4-pin) on the ASI slave.

Technical Data (Pressures are gauge pressures)

Parameter		Symbol	Unit	Comments	
General					
Description				Valve island, G1/8 and G1/4, with Actuator-Sensor-Interface	
Product family				Interact and IM 20 Series	
Mounting				Wall mounting with 4 screws	
Type				IM20-1/8	IM20-1/4
Port size					
– air supply / exhaust				G1/4 both sides	G3/8 both sides
– valve outlets				G1/8	G1/4
Grid width of valves			mm	23	33
Ambient and medium temperature range			°C	-10 to +60	
Material	Base plate			Aluminium	
	Valve housing			Aluminium	
	Seals			NBR	
	ASI module housing			Plastic	
Medium				Filtered (5µm) compressed air or neutral gases, lubricated or unlubr.	
Lubrication				With or without oil mist lubrication [1)]	
Installation				In any position	
No. of switching outputs				Max. 8	
No. of sensor inputs				Max. 8	
Pneumatic Parameters					
Nominal pressure		p_n	bar	6	
Operating pressure		p_{min} p_{max}	bar bar	2.5 10	
Nominal flow rate		Q_N	l/min	500	1300
Electrical Parameters					
Actuation				Electrically pilot operated (valves)	
Connections					
– bus connection				M12 connector, 5-pin	
– inputs				M12 connector, 5-pin (Y-adaptor needed)	
Working principle				Via AS-Interface	
Operating voltage			V	26.5 – 31.6 DC	
Data I/O configuration				7F	
ASI specification ID code				Fh	
Total power usage			mA	< 280	
Addressability				Max. 15	
Sensor voltage			V	Via ASI-Interface	
Sensor power rating			mA	Max. 200/ Sensor – short circuit proof	
Input voltage			V V	For signal „0“ :< 5 For signal „1“: > 10	
Status indication				Via LED	
Protection system			IP	65	

HOERBIGER ORIGA

Overview of Valves for Valve Islands

Valve Type		Valve Function	Valve Type
M	Monostable valve	5/2 way valve with spring return	S9581RF-1/8-24VDC S9581RF-1/4-24VDC
J	Bistable valve	5/2 way valve with impulse actuation	S9581-1/8-24VDC S9581-1/4-24VDC
G	Middle position valve	5/3 way valve middle position closed	S9581RFG-1/8-24VDC S9581RFG-1/4-24VDC
B	Middle position valve	5/3 way valve middle pos. pressurised	S9581RFB-1/8-24VDC S9581RFB-1/4-24VDC
E	Middle position valve	5/3 way valve middle position vented	S9581RFE-1/8-24VDC S9581RFE-1/4-24VDC

Dimensions (mm)

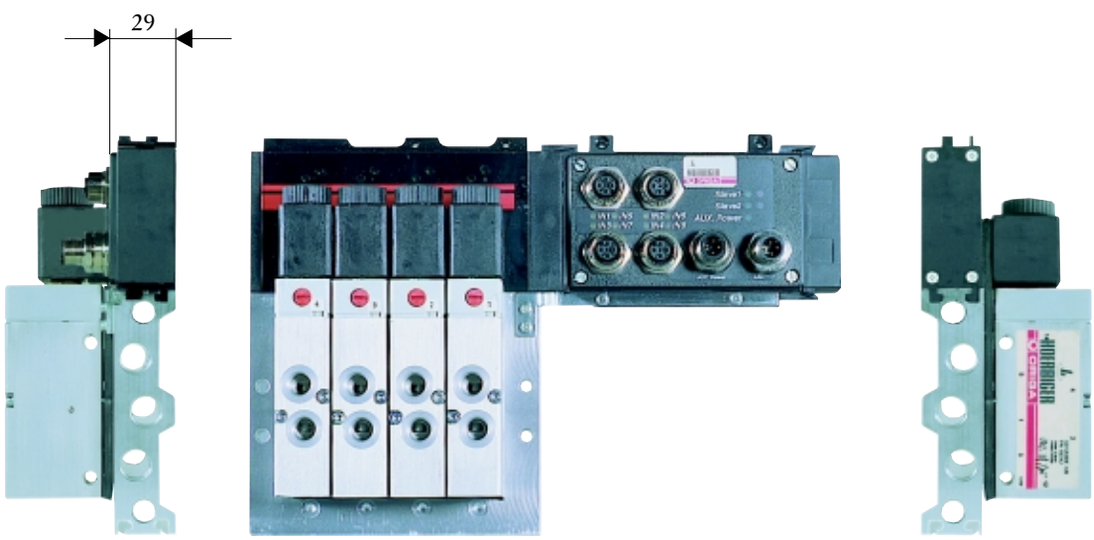

For further dimensions see Leaflet A3P145E or Catalogue A4P003E

Order Instructions for Standard Valve Islands

Valves	Port Size	Order Data Type	Order No.
4 monostable valves 8 input connections for sensors	G1/8 – outlet G1/4 – inlet	**IM20-1/8-AS-04-4M-S8**	**PA10383-0400-04**
4 bistable valves 8 input connections for sensors	G1/8 – outlet G1/4 – inlet	**IM20-1/8-AS-04-4J-S8**	**PA10383-0004-04**
4 monostable valves 8 input connections for sensors	G1/4 – outlet G3/8 – inlet	**IM20-1/4-AS-04-4M-S8**	**PA12921-0400-04**
4 bistable valves 8 input connections for sensors	G1/4 – outlet G3/8 – inlet	**IM20-1/4-AS-04-4J-S8**	**PA12921-0004-04**

Order Instructions for Valve Island Connection Accessories

Description	Item	Order Data Type	Order No.
ASI connection set – comprising items 2 to 5	1		**PD45849**
2 Y-cables for sensor connection M12/2xM8	2	**KS-Y-M12-8-8**	**KL9092**
2 cables for sensor connection M12/M8	3	**KS-M12-8**	**KL9094**
2 right-angle sockets for M12 4-pin connector **(for customer's own arrangement)**	4	**K-M12W-4**	**KL9004**
2 ASI connection modules, M12	5	**AM-AS-M12**	**KL3129**

interact

Valve Connector

with AS-Interface for valve actuation via ASI bus system

– for directional valve series S9-1/8, S9-1/4, S9-1/2

Series: S9

Valve connector Form B (industry standard) with status indicators and gasket for monostable S9 valves
– with slave function for Actuator-Sensor-Interface (ASI)

Application:
The valve connector is used to complete ASI bus systems in combination with electrically actuated individual valves, for operation with HOERBIGER-ORIGA INTERACT-valve islands (IM20-AS) and INTERACT-actuators (AZI, OSP-PI) (e.g. G1/2 valves to operate larger actuators).

Technical Data

Parameter	Symbol	Unit	Comments
General			
Description			AS-Interface connector for valve actuation via ASI bus system
Product family			Interact accessories
Mounting			Plug-type connection with integrated fixing screw
Ambient temperature range		°C	-10 to +80
Material			Transparent plastic (housing)
Installation			In any position
Contact distance		mm	11
No. of outputs			1
No. of inputs			2 (sensors)
Electrical Parameters			
Output voltage		V	24 DC
Output current		A	< 0.5 from external supply
Total sensor current		A	< 0.2 from AS-Interface
Sensor connections			Via M12x1.0 connector (4-pin)
Data I/O configuration			Bh
ASI specification ID code			Fh
Status indicator			LED
Meaning: – ASI – Out			 ASI operating voltage on Valve output active
Protection system		IP	65

Connections

1. Lay black flat cable (= energy supply) in connection lid „POWER“.
2. Lay yellow flat cable (= ASI signal line) in connection lid „ASI“.
3. Secure connection lids with second fixing screw.
   This completes the contact.

Note

The mains supply must have safe separation complying with Standard IEC 364-4-41 !

HOERBIGER ORIGA

ASI Valve Connector – Dimensions (mm) and Pin Assignment

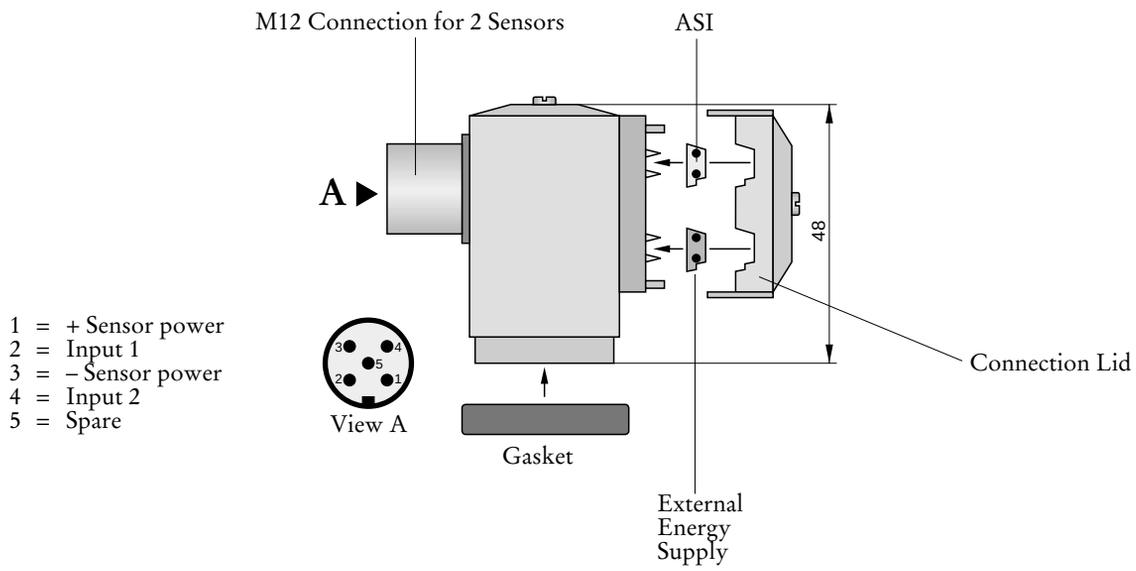

Order Instructions

Description	Order Data	
	Type	**Order No.**
ASI valve connector	**GSD-AS-22**	**KL3104**

The ASI Valve Connector is recommended for use with:

- Directional Valve Type S9 581RF-1/8
- Directional Valve Type S9 581RF-1/4
- Directional Valve Type S9 581RF-1/2
- Stop Valve airfit swing Type SDR-1/4E, SDR-3/8E
- Stop Valve airfit comfort Type CDR-3/8E, CDR-1/2E

Interact Accessories Overview

	Page
Compact Modules	
• Digital I/O Modules for ASI	34-37
ASI Master with Gateway	38, 39
Power Supply Units	40, 41
ASI Connection Cable	42, 43
ASI Connection Module	42, 43
ASI Addressing Unit	42, 43
ASI Addressing Cable	42, 43
Y-Cable	42, 43

interact

Compact Module K45 (I/O Module 04)

Digital I/O Module for Actuator-Sensor-Interface (ASI)

Application:
The I/O Box is used for digital control of actuators via the AS-Interface and for feedback of signals to the ASI Master.
For other configurations in the number of inputs and outputs please consult our Technical Department.

Versions:
digital control of
4 actuators (4A)
or
2 actuators and
2 sensor inputs (2E/2A)
or
4 sensor inputs (4E)

Electrical Connections:
– black ASI flat cable (energy supply)
– yellow ASI flat cable (signal line)
Pneumatic Connections:
plug-type connectors

Certifications are available for:
AS-Interface, UL, CSA, Shipbuilding

HOERBIGER ORIGA

Technical Data

Parameter	Symbol	Unit	Comments
General			
Description			Digital I/O Module for Actuator-Sensor-Interface (ASI), 4 connections
Product family			Interact
AS-Interface chip			SAP4
Ambient and medium temperature range		°C	-25 to +85
Mounting			Wall mounting with mounting plate (please order separately)
Operating voltage		V	26.5 to 31.5 DC
Inputs			2 connectors M12x1, 5-pin for 2E/2A 4 connectors M12x1, 5-pin for 4E
Input wiring			PNP
Power rating of inputs		mA	<= 200 – for Version 2E/2A or 4E
Input switching level-high		V	>= 10 – for Version 2E/2A or 4E
Input current low/high		mA	<=1.5 / >=6 – for Version 2E/2A or 4E
Input pin assignment			1 = sensor power supply L+ 3 = sensor power supply L- 4+2 = data input I 5 = earth
Outputs			2 connectors M12x1, 5-pin for 2E/2A 4 connectors M12x1, 5-pin for 4A
Power rating of outputs		A A	1.5 for Version 2E/2A 1.0 for Version 4A
Output pin assignment			3 = „–“ 2/4 = output 5 = earth
Short circuit protection			Standard for Version 2E/2A or 4A
Inductive protection			Standard for Version 2E/2A or 4A
Voltage supply		V	24, via black ASI cable for Version 2E/2A or 4A
No. of addressings			Max. 15
Protection system		IP	67

Installing the ASI Profile Cables

Switching Status Indicators

Yellow LED = I/O switching status
Green LED = auxiliary voltage
Red LED = fault

ASI Diagnosis

Green LED = OK
Red LED = no data transmission
Flashing red/yellow LED = no-address
Flashing red LED = Over Load

Order Instructions

Description	Item	Order Data	
		Type	Order No.
Compact Module K45 (Version 4E) – set comprising items 2 to 5			**PD45843**
Compact Module K45 with 4 inputs	2	**EA-AS-4E**	**KL3116**
Mounting plate K45 for DIN rail or profile mounting	3	**AB-G-H**	**KL3119**
ASI cover cap M12 (pack of 10)	4	**AB-V-M12**	**KL3121**
ASI seals for flat cable	5	**AB-D-V**	**KL7110**
Compact Module K45 (Version4A) – set comprising items 7 to 10	6		**PD45844**
Compact Module K45 with 4 outputs	7	**EA-AS-4A**	**KL3117**
AS-Interface mounting plate K45 for DIN rail or profile mounting	8	**AB-G-H**	**KL3119**
ASI cover cap M12 (pack of 10)	9	**AB-V-M12**	**KL3121**
ASI seals for flat cable	10	**AB-D-V**	**KL7110**
Compact Module K45 (Version 2E/2A) – set comprising items 12 to 15	11		**PD45845**
Compact Module K45 with 2 inputs and 2 outputs	12	**EA-AS-2E/2A**	**KL3118**
AS-Interface mounting plate K45 for DIN rail or profile mounting	13	**AB-G-H**	**KL3119**
ASI cover cap M12 (pack of 10)	14	**AB-V-M12**	**KL3121**
ASI seals for flat cable	15	**AB-D-V**	**KL7110**

interact

Compact Module K60 (I/O Module 08)

Digital I/O Module for Actuator-Sensor-Interface (ASI)

Application:
The I/O Box is used for the digital control of actuators via the AS-Interface and for the feedback of signals to the ASI Master. For other configurations in the number of inputs and outputs please consult our Technical Department.

Version:
Digital control of 4 actuators and 4 sensor inputs (4E/4A)

Certifications are available for:
AS-Interface
UL
CSA
Shipbuilding

Technical Data

Parameter	Symbol	Unit	Comments
General			
Description			Digital I/O Module for Actuator-Sensor-Interface (ASI), 8 connections
Product family			Interact
AS-Interface chip			SAP4
Ambient and medium temperature range		°C	-25 to +85
Mounting			Wall mounting with mounting plate or DIN rail foot (please order separately)
Operating voltage		V	26.5 to 31.5 V
Input wiring			PNP
Number of inputs			4 connectors M12x1 (5-pin)
Sensor power rating		mA	<= 200
Switching level - high		V	>= 10
Switch.current low/high		mA	<=1.5 / >=6
Input pin assignment			1 = sensor power supply L+ 2 = data input II 3 = sensor power supply L- 4 = data input I 5 = earth
Number of outputs			4 connectors M12x1 (5-pin)
Power rating		A	1
Output pin assignment			3 = „-“ 2/4 = output 5 = earth
Short circuit protection			Yes
Inductive protection			Yes
Voltage supply		V	24 via black ASI Cable
Data I/O configuration			3h
ASI specification ID code			Fh
Number of addressings			Max. 15
Protection system		IP	67

HOERBIGER ORIGA

Connections

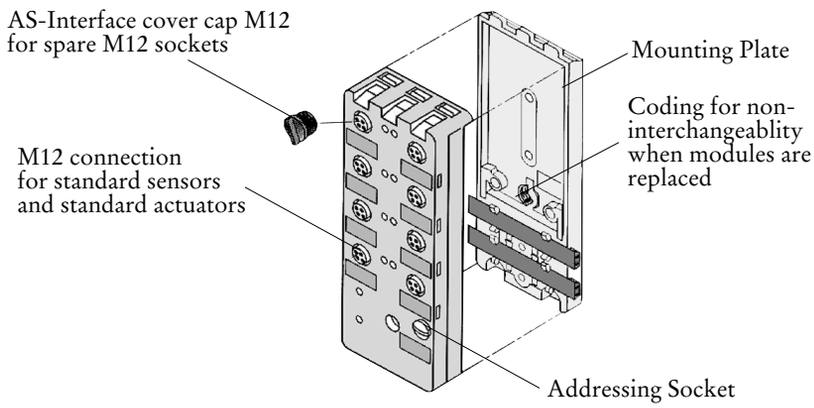

Dimensions (mm) – Mounting Plate

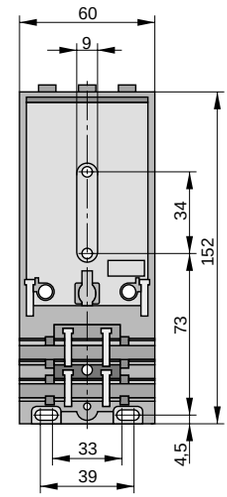

Switching Status Indicators

Yellow LED = I/O switching status

Green LED = I/O indicator

Green/red LED = auxiliary voltage

Order Instructions

Description	Item	Order Data Type	Order No.
Compact Module K60 (4 input / 4 output) – set comprising items 2 to 6	1		**PD45846**
Compact Module K60	2	**EA-AS-4E/4A**	**KL3122**
Mounting plate K60 for flat cable connection	3	**AB-G-04**	**KL3123**
Snap foot for DIN rail mounting	4	**AB-H-04**	**KL3124**
ASI cover cap M12 (pack of 10)	5	**AB-V-M12**	**KL3121**
ASI seals for flat cable	6	**AB-D-V**	**KL7110**

interact

DP/AS Interface

for Profibus DP

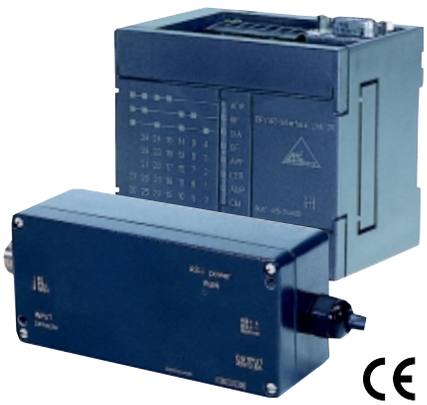

Series: DP

The DP-AS Interface is essential equipment for the ASI bus system with Interact.

Application:
With the DP/AS-Interface an ASI bus system can be operated as a subsystem to a Profibus DP.

Note:
An ASI Power Supply Unit is essential for operation of the ASI bus system.

The Manual in German or English contains examples of programming as well as Type and GSD Files.

Certifications are available for:
AS-Interface
UL
CSA
Shipbuilding

HOERBIGER ORIGA

Technical Data

Parameter	Symbol	Unit	Comments
ASI Master with Gateway to Profibus DP CP 242-8 with IP20 protection system			
Product family			Interact
Type			DP/AS-Interface Link IP20
Mounting			Wall or DIN rail mounting
Ambient temperature range		°C	0 to +60 when mounted horizontally!
Max. relative humidity		%	95 at 25°C
Material			Aluminium (housing)
Weight		g	Ca. 200
ASI master profile			M2
Bus cycle time		ms	5 with 31 Slaves
I/O address assignment			8DE/8DA and 8AE/8AA
Supply voltage		V	+5 DC
Voltage supply from the AS-Interface cable			According to AS-Interface specification
Current usage from the ASI cable		mA	Max. 200
Power loss		W	3.7
Connection			Clamps
Profibus connection			9-pin D-sub-socket
Profibus transmiss. rate		Mbit/s	Max. 12
Power rating 5V DC at Profibus connection		mA	Max. 90
Protection system		IP	20
ASI Master with Gateway to Profibus DP CP 242-8 with IP65 protection system			
Product family			Interact
Type			DP/AS-Interface Link IP65
Mounting			Direct mounting
Ambient temperature range		°C	-25 to +60
Max. relative humidity		%	95 at 25°C
Material			Aluminium (housing)
Weight		g	Ca. 800
ASI master profile			M2
Bus cycle time		ms	5 with 31 Slaves
I/O address assignment			8DE/8DA and 8AE/8AA
Supply voltage		V	+5 DC
Voltage supply from the AS-Interface cable			According to AS-Interface specification
Current usage		mA mA	Max. 70 from ASI cable Max. 100 from 24V DC supply
Power loss		W	3.7
Connections			AS-Interface 1 x 4-pin integral connector Profibus DP 2 x 12-pin unit connector
Profibus transmiss. rate		Mbit/s	Max. 12
Power rating 5V DC at the Profibus connection		mA	Max. 50
Protection system		IP	66/67

Note:
If required, certified gateways to other field bus systems (Interbus S, CAN...) can also be used.

Dimensions (mm)			
Unit Type	Width	Height	Depth
DP/AS-Interface IP20	90	80	60
DP/AS-Interface IP65	205	80	57

Order Instructions		
Description	Order Data Type	Order No.
DP/AS-Interface IP20	**DP-AS-20**	**KL3112**
Manual, German, for Master DP-AS-20	**HBD-DP-AS-20**	**KL3113**
Manual, English, for Master DP-AS-20	**HBE-DP-AS-20**	**KL3134**
DP/AS-Interface IP65	**DP-AS-65**	**KL3135**
Manual, German, for Master DP-AS-65	**HBD-DP-AS-65**	**KL3136**
Manual, English, for Master DP-AS-65	**HBE-DP-AS-65**	**KL3137**

interact

Power Supply Unit

Series: NT

The ASI Power Supply Unit is essential equipment for the ASI bus system with Interact.

Application:
The ASI Power Supply Unit is essential to the function of the ASI bus system. It supplies an operating voltage complying with the ASI specification.

This Data Sheet covers the simplest versions supplied by HOERBIGER-ORIGA.

For further information please contact our Technical Department.

The Manual contains examples of programming as well as Type and GSD files.

Certifications are available for:
AS-Interface
UL
CSA
Shipbuilding

HOERBIGER ORIGA

Technical Data

Parameter	Symbol	Unit	Comments		
ASI Power Supply Units for 2.4A – 4A – 7A					
Version			Single Output IP 20		
Weight		g	800 (2.4A)	1000 (4A)	1800 (7A)
Input voltage		V	115 / 230 AC		
Mains frequency		Hz	47 – 63		
Output current		A	2.4	4.0	7.0
Power loss		W	10	18	37
Current limiter		W	>2.8	>4.5	>7.4
Output			Regulated potential-free direct voltage to AS-Interface specification		
Nominal voltage		V	30 DC		
Overvoltage protection			To EN 61 000-4-1 for 2.4A and 4A To VDE 0160 (W2) for 7A		
Mains failure bridging		ms	20		
Integral mains fuse			T2 in 2.4A, not accessible in Versions 4A and 7A		
Function indicator			Green LED		
Short circuit protection			Standard		
Protection system		IP	20		
ASI Power Supply Unit for 2.4 A (IP 65 protection)					
Version			Single Output IP 65		
Weight		g	Ca. 1000		
Input voltage		V	20.4 – 28.8 DC		
Output current		A	2.4		
Power loss		W	17		
Current limiter		W	>2.9		
Output			Regulated potential-free direct voltage to AS-Interface specification		
Nominal voltage		V	30 DC		
Overvoltage protection		V	35/500ms		
Mains failure bridging		ms	10		
Integral mains fuse			T6.3 not accessible		
Function indicator			Green LED		
Short circuit protection			Standard		
Protection system		IP	65		

Dimensions (mm)			
Unit Type	Width	Height	Depth
Power Supply Unit 2.4 A, IP20	46	110	136
Power Supply Unit 4.0 A, IP20	75	135	107
Power Supply Unit 7.0 A, IP20	200	125	135
Power Supply Unit 2.4 A, IP65	221	80	57

Order Instructions		
Description	Order Data	
	Type	Order No.
Power Supply Unit 2.4 A, IP20	**NT-AS-240**	**KL3114**
Power Supply Unit 4.0 A, IP20	**NT-AS-400**	**KL3115**
Power Supply Unit 7.0 A, IP20	**NT-AS-700**	**KL3132**
Power Supply Unit 2.4 A, IP65	**NT-AS-240-65**	**KL3133**

interact

ASI Accessories

ASI Connection Cable
ASI Connection Module
ASI Addressing Unit
ASI Addressing Cable
Y-Cable

Application:

ASI Flat Cable:
The black ribbon cable supplies power to the individual units. The yellow flat cable carries signals between the ASI master and the slaves.

Addressing Unit:
The battery-powered Addressing Unit with its special cable is used to assign addresses to the ASI system components.

ASI M12 Connection Module:
The ASI M12 Connection Module enables ASI flat cable to be connected to normal M12 plug-type connections (5-pin), e.g. to Valve Island IM20-AS-....

Y-Cable:
The Y-Cable is used to connect 2 sensors to one M12 connector (e.g. Valve Island IM20-AS).

Technical Data

Parameter	Symbol	Unit	Comments		
General					
Description			Connection Cable, Connection Modules, Addressing Units, Y-Cable for sensor connections		
Product family			Interact Accessories		
Installation			In any position		
Ambient temperature range		°C	-10 to +80		
Protection system		IP	65		
Material			Housings: plastic (transparent)		
ASI Connection Cable (2x1.5mm)					
Flat cable			Black – power supply		
Flat cable, oil-resist.			Black (PU) – power supply		
Flat cable			Yellow – signal line		
Flat cable, oil-resist.			Yellow (PU) – signal line		
ASI-Connection Module Box / M12 Connection Module					
Connection for standard round cable at the Module Box			ASI cable, 4 x M12 (5-pin)		
Connection for standard round cable at the Module Box			ASI cable, 1 x M12 (5-pin)		
Protection system		IP	65		
ASI Addressing Unit with Charger and Connection Cables					
Charger voltage		V	115 or 230		
Charging time		h	Ca. 14		
Display			LCD, 13mm high digits		
Keyboard			Membrane keyboard		
Interface			ASI, reverse pole proof		
Power supply			Battery		
Battery charge life		h	8		
Protection system		IP	20		
Operating temperature		°C	0 to +50		
ASI Addressing Cable					
Connection to special socket			M12 – Klinkenstecker		
Connection from M12 connector to ASI cable			2 x M12 connector		
Y-Cable for M12 Sensor Connection					
Sensor connection			M12 / 2x M8		
Contact assignment			Contact	Y-Cable	M8 sockets
			1	(+)	(+)
			2	(S2)	
			3	(–)	(–)
			4	(S1)	(S)
Cable Adaptor for M12 – M8 (Single)					
Sensor connection			M12 / M8		
Cable Adaptor for M12 with Valve Connector					
Output connection			M12		
Valve Connector			Plug socket to DIN 43650 Form B		
ASI Cable Connector with Pg 11 Connection *					
Coupling Module			with 4 recessed nuts 2 cable fittings Pg 11 and 3 screw plugs		
Wire section		mm^2	1 to 2.5		
Protection system		IP	67		
Mounting			Wall or top hat rail mounting		

* Note:
Please order lid and seal for flat cable separately.

HOERBIGER ORIGA

Notes:

ASI Flat Cable

With its so-called penetration technology, ASI flat cable is designed to be connected at any desired point by means of its special connectors (e.g. M12 Connection Modules and I/O Modules). When the connector is removed, the self-sealing cable insulation ensures that protection system IP67 is maintained. The asymmetrical cable section makes it almost impossible to reverse the poles by mistake.

ASI Cable Connector

A simple connector for ASI flat cable can be mounted with the base plate for the I/O Module K45 and its lid.

M12 Connector Sockets, M8 Connectors

For customers' own wiring arrangements, straight or right-angled M12 connector sockets and M8 connectors from the IM20 Valve Island Accessories range can be used.

ASI Connection Module

Pg-Type Adaptor

Addressing Unit

ASI T-Connector

ASI Flat Cable

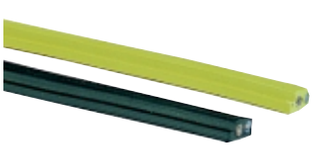

Order Instructions

Description	Item	Order Data Type	Order No.
Addressing Unit – set – comprising items 2 to 5	1		**PD45838**
Addressing Unit	2	**AD-AS**	**KL3130**
ASI special cable	3	**AD-AS-L**	**KL3131**
Adapt.cable 2 x M12 connectors	4	**AD-AS-M12**	**KL3141**
ASI Connection Module M12	5	**AM-AS-M12**	**KL3129**
Pg-E Coupling Module – set – comprising items 7 to 9	6		**PD45839**
Pg-E Coupling Module	7	**AM-AS-PG11**	**KL3138**
ASI Lid for Coupling Module or Base Plate	8	**AM-AS-D**	**KL3139**
ASI seal (pack) for Pg 11 connection	9	**AM-D-V**	**KL7111**
ASI cable set, yellow, oil-resist., – comprising items 11 to 14	10		**PD45847**
100m ASI flat cable, yellow, oil-resistant polyurethane	11	**K-AS-G-PU**	**KL9091**
5 cables for sensor connection, M12 / M8	12	**KS-M12-8**	**KL9094**
5 Y-cables for sensor connection, M12 / M8	13	**KS-Y-M12-8-8**	**KL9092**
2 adaptor cables, M12 socket to DIN 43650 Form B	14	**K-GSD-M12**	**KL9095**
ASI seal set IP 67 – set – comprising items 16 to 18	15		**PD45848**
10 ASI cover caps	16	**AB-V-M12**	**KL3121**
5 straight and 5 profiled ASI seals for flat cable	17	**AB-D-V**	**KL7110**
1 pack of ASI Pg11 flat seals	18	**AM-D-V**	**KL7111**
Connecting Units, Set 1 – comprising items 20 to 27	19		**PD45850**
5 ASI Connection Modules M12	20	**AM-AS-M12**	**KL3129**
2 Pg-E Coupling Modules	21	**AM-AS-PG11**	**KL3138**
3 ASI Lids	22	**AM-AS-D**	**KL3139**
2 Coupling Modules FK	23	**AM-AS-FK**	**KL3126**
1 ASI Connection Module	24	**AZ-AS-M12**	**KL3142**
10 ASI Cover Caps M12	25	**AB-V-M12**	**KL3121**
5 straight and 5 profiled ASI seals for flat cable	26	**AB-D-V**	**KL7110**
1 pack of ASI Pg11 seals	27	**AM-D-V**	**KL7111**
Connecting Units, Set 2 – comprising items 29 to 33	28		**PD45851**
2 ASI Connection Modules	29	**AZ-AS-M12**	**KL3142**
3 Coupling Modules FK	30	**AM-AS-FK**	**KL3126**
2 ASI Lids	31	**AM-AS-D**	**KL3139**
10 ASI Cover Caps M12	32	**AB-V-M12**	**KL3121**
5 straight and 5 profiled ASI seals for flat cable	33	**AB-D-V**	**KL7110**
Accessories (Individual Parts)			
Y-Cable for sensor connections, M12 / 2x M8		**KS-Y-M12-8-8**	**KL9092**
Adaptor Cable, socket to DIN 43650 Form B / M12 connector		**KS-GSD-M12**	**KL9095**
Adaptor Cable, M12 / M8 (single)		**KS-M12-8**	**KL9094**
ASI Adaptor Cable, M12 / flat cable		**AD-AS-M12-K**	**KL3143**
ASI flat cable, black		**K-AS-S**	**KL9088**
ASI flat cable, black, oil-resistant polyurethane		**K-AS-S-PU**	**KL9089**
ASI flat cable, yellow		**K-AS-G**	**KL9090**
ASI flat cable, yellow, oil-resistant polyurethane		**K-AS-G-PU**	**KL9091**

ORIGA SYSTEM PLUS

Modular Pneumatic Linear Drive Systems

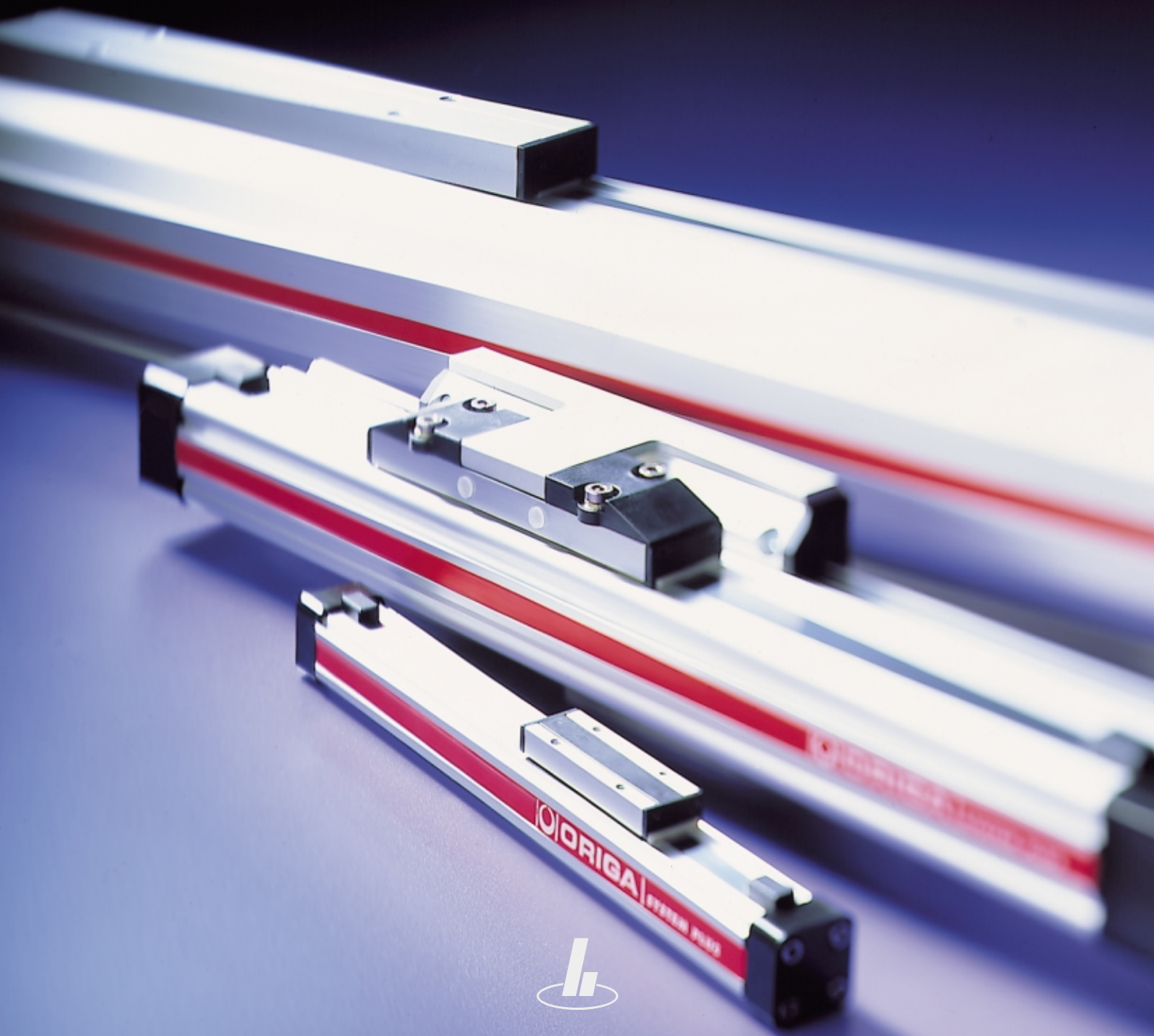

HOERBIGER
ORIGA

Contents
Linear Drives

OSP
ORIGA
SYSTEM
PLUS

	Data Sheet	Page
Introduction – OSP Concept	1.01.001E	1-3
Modular Components Overview	1.01.002E	4-5
Control Examples for OSP-P	1.01.002E	6
OSP-P Application examples	1.01.002E	7
Rodless Pneumatic Cylinders		
Series OSP-P ø10 to 80 mm	1.10.001E	9-22
Integrated Valves VOE	1.10.002E	20-21
Linear Guides		
Overview	1.40.001E	23-24
Plain Bearing Guide SLIDELINE	1.40.002E	25-26
Plain Bearing Guide SLIDELINE with ACTIVE-Brake	1.40.002E	25-26
Roller Guide POWERSLIDE	1.40.003E	27-30
Ball Bushing Guide GUIDELINE	1.40.004E	31-34
Aluminium-Roller Guide PROLINE	1.40.005E	35-36
Aluminium-Roller Guide PROLINE with ACTIVE-Brake	1.40.005E	35-36
Brakes		
Overview	1.42.001E	37-38
ACTIVE-Brakes		
ACTIVE-Brake for Standard Cylinder	1.42.002E	39-42
Plain Bearing Guide SLIDELINE with ACTIVE-Brake	1.40.002E	25-26
Aluminium-Roller Guide PROLINE with ACTIVE-Brake	1.40.005E	35-36
PASSIVE-Brakes		
Multi-Brake: PASSIVE-Brake with Plain Bearing Guide SLIDELINE	1.42.003E	43-46
Multi-Brake: PASSIVE-Brake with Aluminium-Roller Guide PROLINE	1.42.004E	47-49

	Data Sheet	Page
OSP – Accessories		
Overview	1.45.001E	51-52
Clevis Mounting	1.45.002E	53-54
End Cap Mounting	1.45.003E	55
Mid-Section Support	1.45.004E	56
Mountings for Linear Drives fitted with OSP-Guides	1.45.005E	57-59
Inversion Mounting	1.45.006E	61
Adaptor Profile	1.45.007E	62
T-Nut Profile	1.45.008E	63
Adaptor Profile	1.45.009E	64
Proximity Sensors	1.45.100E	65-67
Displacement Measuring Systems ORIGA SENSOFLEX		
Overview	1.50.001E	69-70
– Series SFI	1.50.002E	71-74
– Series SFA	1.50.003E	75-76
Servopneumatic Positioning System ORIGA SERVOTEC		
Overview	1.55.001E	77-78
Series SERVOTEC	1.55.002E	79-80

HOERBIGER-ORIGA GMBH · Südliche Römerstraße 15 · D-86972 Altenstadt · Tel. +49 +8861 221-0 · Fax +49 +8861 221-1305 · E-mail pneu@hoerbiger.de
HOERBIGER-ORIGA GMBH · Industriestr. 8 · D-70794 Filderstadt · Tel. +49 +7158 1703-0 · Fax +49 +7158 64870 · E-mail dmarket@hoerbiger-origa.com
HOERBIGER-ORIGA LTD. · Tewkesbury Industrial Estate · Tewkesbury GL 20 8 ND GB · Tel. +44 1684 85 00 00 · Fax +44 1684 85 05 55
E-mail sales@hoerbiger-origa.com
HOERBIGER-ORIGA Pneumatik GmbH · Dr. Alexander-Schärf-Straße 12 · A-2700 Wiener Neustadt · Tel. +43 +2622 26071-0 · Fax +43 +2622 26071-5
E-mail amarket@hoerbiger-origa.com
HOERBIGER-ORIGA AB · Kungsgatan 10, Box 67 · SE-73622 Kungsör · Tel. +46 227 411 00 · Fax +46 227 411 29 · E-mail semarket@hoerbiger-origa.com
Internet http://www.hoerbiger-origa.com

HOERBIGER ORIGA

ONE CONCEPT
– THREE DRIVE OPTIONS

Based on the ORIGA rodless cylinder, proven in world wide markets, HOERBIGER-ORIGA now offers the complete solution for linear drive systems. Designed for absolute reliability, high performance, ease of use and optimised engineering the ORIGA SYSTEM PLUS satisfies even the most demanding applications.

ORIGA SYSTEM PLUS

is a totally modular concept which offers the choice of pneumatic or electric actuation, with guidance and control modules to suit the exact needs of individual installations.

The actuators at the core of the system all have a common aluminium extruded profile, with double dovetail mounting rails on three sides, these are the principle building blocks of the system to which all modular options are directly attached.

SYSTEM MODULARITY

- **Pneumatic Drive**
  – For all round versatility and convenience, combining ease of control and broad performance capability. Ideally suited for point-to point operations, reciprocating movements and simple traverse / transfer applications.

- **Electric Screw Drive**
  – For high force capability and accurate path and position control.

For additional informations on electrical linear drives, please refer to catalogue A4 P017E.

- **Electric Belt Drive**
  – For high speed applications, accurate path and position control and longer strokes.

For additional informations on electrical linear drives, please refer to catalogue A4 P017E.

- 18 additional Guidance options provide the necessary level of precision, performance and duty.

- Compact solutions, which are simple to install and can be easily retrofitted.

- Valves and control options can be directly mounted to the actuator system.

- Diverse mounting options to provide total installation flexibility.

ONE CONCEPT – THREE DRIVE OPTIONS

*** Information on electrical linear drives, please refer to catalogue A4 P017E**

Basic Linear Drive – Standard Version ● Series OSP-P ● Series OSP-E Belt * ● Series OSP-E Screw *	
Air Connection on the End-face ● Series OSP-P	
Both Air Connection at One End ● Series OSP-P	
Clevis Mounting ● Series OSP-P ● Series OSP-E Belt * ● Series OSP-E Screw *	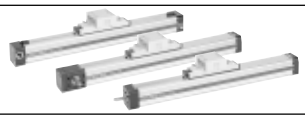
End Cap Mounting ● Series OSP-P ● Series OSP-E Belt * ● Series OSP-E Screw *	
Mid-Section Support ● Series OSP-P ● Series OSP-E Belt * ● Series OSP-E Screw *	
Inversion Mounting ● Series OSP-P ● Series OSP-E Belt * ● Series OSP-E Screw *	
Linear Guides – SLIDELINE ● Series OSP-P ● Series OSP-E Screw *	
Linear Guides – POWERSLIDE ● Series OSP-P ● Series OSP-E Belt * ● Series OSP-E Screw *	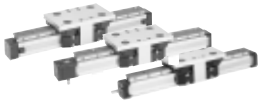
Linear Guides – GUIDELINE ● Series OSP-P ● Series OSP-E Belt * ● Series OSP-E Screw *	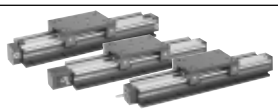
Linear Guides – PROLINE ● Series OSP-P ● Series OSP-E Belt * ● Series OSP-E Screw *	
Brakes ● Active-Brakes ● Passive-Brakes	
Proximity Sensors ● Series OSP-P ● Series OSP-E Belt * ● Series OSP-E Screw *	
SENSOFLEX – Measuring Systems ● Series SFI ● Series SFA	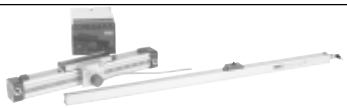
SERVOTEC Servo -Pneumatic Positioning System ● Series OSP-P	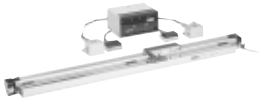

Modular Components - Overview

Modular Components - Overview

OSP — ORIGA SYSTEM PLUS

Linear Drives	OSP-P10 (1	OSP-P16 (1	OSP-P25 (1	OSP-P32 (1	OSP-P40 (1		OSP-P50 (1	OSP-P63 (1	OSP-P80 (1	OSP-E25-B (2	OSP-E32-B (2	OSP-E50-B (2	OSP-E25-S (3	OSP-E32-S (3	OSP-E50-S (3
Theoretical force / Effective force at 6bar [N]	47 / 32	120 / 78	295 / 250	483 / 420	754 / 640		1178 / 1000	1870 / 1550	3010 / 2600	50	100 - 150	300 - 425	250	600	1500
Velocity v [m/s]	> 0,005	> 0,005	> 0,005	> 0,005	> 0,005		> 0,005	> 0,005	> 0,005	0,05 - 2,0	0,05 - 3,0	0,05 - 5,0	0,01 - 0,25	0,01 - 0,5	0,01 - 1,25
Magnetic piston (three sides)	×	❑	❑	❑	❑		❑	❑	❑	❑	❑	❑	❑	❑	❑
Lubrication - Prelubricated	❑	❑	❑	❑	❑		❑	❑	❑	❑	❑	❑	❑	❑	❑
Multiple air ports (4 x 90°)	×	❑	❑	❑	❑		❑	❑	❑	×	×	×	×	×	×
Both Air Connections at End-face	×	❍	❍	❍	❍		❍	❍	❍	×	×	×	×	×	×
Air Connection on the End-face	×	❍	❍	❍	❍		❍	❍	❍	×	×	×	×	×	×
Cushioning	❑	❑	❑	❑	❑		❑	❑	❑	×	×	×	×	×	×
Cushion length [mm]	2,50	11	17	20	27		30	32	39	×	×	×	×	×	×
Stroke length [mm]	1 - 6000	1 - 6000	1 - 6000	1 - 6000	1 - 6000		1 - 6000	1 - 6000	1 - 6000	100 - 3000	100 - 5000	100 - 5000	100 - 1300	100 - 3200	100 - 3200
Pressure range [bar]	0,0 - 8,0	0,0 - 8,0	0,0 - 8,0	0,0 - 8,0	0,0 - 8,0		0,0 - 8,0	0,0 - 8,0	0,0 - 8,0	×	×	×	×	×	×
Temperature range [°C] ❊	-10 – + 80 °	-10 – + 80	-10 – + 80	-10 – + 80	-10 – + 80		-10 – + 80	-10 – + 80	-10 – + 80	- 30 – + 80	- 30 – + 80	- 30 – + 80	- 20 – + 80	- 20 – + 80	- 20 – + 80
Viton / chemical resistance	❍	❍	❍	❍	❍		❍	❍	❍	×	×	×	×	×	×
Stainless steel parts	❍	❍	❍	❍	❍		❍	❍	❍	×	×	×	×	×	×
Clevis mounting	❍	❍	❍	❍	❍		❍	❍	❍	❍	❍	❍	❍	❍	❍
Slow speed lubrication	❍	❍	❍	❍	❍		❍	❍	❍	×	×	×	×	×	×
Duplex Connection / Multiplex Connection	×	on request	❍	❍	❍		❍	on request	on request	×	×	×	×	×	×
Tandem piston	❍	❍	❍	❍	❍		❍	❍	❍	❍	❍	❍	❍	❍	❍
Self Guidance															
L [N]	20	120	300	450	750		1200	1650	2400	160	300	850	500	1200	3000
M [Nm]	1	4	15	30	60		115	200	360	12	25	80	12	25	80
Ms [Nm]	0,2	0,45	1,5	3	6		10	12	24	2	8	16	2	8	16
Mv [Nm]	0,3	0,5	3	5	8		15	24	48	8	16	32	8	16	3
Slideline															
L [N]	×	325	675	925	1500		2000	2500	on request	×	×	×	675	925	2000
M [Nm)]	×	11	34	60	110		180	260	on request	×	×	×	34	60	180
Ms [Nm]	×	6	14	29	50		77	120	on request	×	×	×	14	29	77
Mv [Nm]	×	11	34	60	110		180	260	on request	×	×	×	34	60	180
Proline															
L [N]	×	720	1210	1460	2600		3890	×	×	1210	1460	3890	1210	1460	3890
M [Nm)]	×	18	55	91	198		313	×	×	55	91	313	55	91	313
Ms [Nm]	×	11	23	36	72		139	×	×	23	36	139	23	36	139
Mv [Nm]	×	18	55	91	198		313	×	×	55	91	313	55	91	313
Powerslide															
L [N]	×	1400	1400 - 3000	1400 - 3000	3000		3000 - 4000	×	×	1400 - 3000	1400 - 3000	3000 - 4000	1400 - 3000	1400 - 3000	3000 - 4000
M [Nm]	×	45	63 - 175	70 - 175	175 - 250		250 - 350	×	×	63 - 175	70 - 175	250 - 350	63 - 175	70 - 175	250 - 350
Ms [Nm]	×	14	14 - 65	20 - 65	65 - 90		90 - 140	×	×	14 - 65	20 - 65	90 - 140	14 - 65	20 - 65	90 - 140
Mv [Nm]	×	45	63 - 175	70 - 175	175 - 250		250 - 350	×	×	63 - 175	70 - 175	250 - 350	63 - 175	70 - 175	250 - 350
Guideline															
L [N]	×	×	1650 - 2500	1650 - 2500	4400 - 8000		4400 - 8000	×	×	1650 - 2500	1650 - 2500	4400 - 8000	1650 - 2500	1650 - 2500	4400 - 8000
M [Nm]	×	×	115	145	440		500	×	×	115	145	500	115	145	500
Ms [Nm]	×	×	75	90	330		375	×	×	75	90	375	75	90	375
Mv [Nm]	×	×	90	115	310		355	×	×	90	115	355	90	115	355
Guideline with shock absorber for cushioning	×	×	❍	❍	❍		❍	×	×	❍	❍	❍	❍	❍	❍
Active-Brake															
Braking force at 6 bar (Brake surface dry) [N]	×	×	350	590	900		1400	2170	4000	×	×	×	×	×	×
Slideline SL / Proline PL with Brakes															
Aktive-Brake			**SL/PL**	**SL/PL**	**SL/PL**		**SL/PL**								
Braking force at 6 bar (Brake surface dry) [N]	×	×	325/on request	545/on request	835/on request		1200/on request	×	×	×	×	×	×	×	×
Passive-Brake Multibrake			**SL/PL**	**SL/PL**	**SL/PL**		**SL/PL**	**SL**	**SL**						
Brake force (no pressure, Brake surface dry) [N]	×	×	470/315	790/490	1200/715		1870/1100	2900	2900	×	×	×	×	×	×
Accessories															
Proximity Sensors															
RS (closer, opener) ; ES (PNP, NPN)	❍	❍	❍	❍	❍		❍	❍	❍	❍	❍	❍	❍	❍	❍
Displacement measuring systems															
SFI - incremental	×	×	❍	❍	❍		❍	❍	❍	×	×	×	×	×	×
SFA - absolute	×	×	❍	❍	×		×	×	×	×	×	×	×	×	×
Integrated valves 3/2 WV NO VOE	×	×	❍	❍	❍		❍	on request	on request	×	×	×	×	×	×
Motor package (stepper/servo)	×	×	×	×	×		×	×	×	❍	❍	❍	❍	❍	❍
Postioning system Servotec	×	×	❍	❍	×		×	×	×	×	×	×	×	×	×
Mountings															
End Cap Mounting / Mid-Section support	❍	❍	❍	❍	❍		❍	❍	❍	❍	❍	❍	❍	❍	❍
Inversion mounting	×	❍	❍	❍	❍		❍	❍	❍	❍	❍	❍	❍	❍	❍
Shock absorber for intermediate position	×	×	on request	on request	on request		on request	×	×	×	×	×	×	×	×
Adaptor Profile / T-Nut Profile	×	❍	❍	❍	❍		❍	❍	❍	❍	❍	❍	❍	❍	❍
Special cylinders															
Cleanroom - class 10 / Dust-excluding cylinder	×	on request	on request	on request	×		×	×	×	×	×	×	×	×	×
High-speed up to 30 m/s	×	on request	on request	on request	×		×	×	×	×	×	×	×	×	×

❑ = Standard version
❍ = Option
× = not applicable
❊ = other Temperature ranges on request

(1 = Rodless Pneumatic Cylinder
(2 = Linear Actuator with toothed belt
For additional information on electrical linear drives, please refer to catalogue A4 P017E
(3 = Linear Actuator with ball screw
For additional information on electrical linear drives, please refer to catalogue A4 P017E

CONTROL EXAMPLES FOR OSP-P

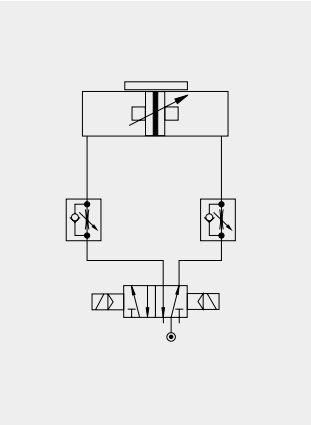

Control for an end-of-stroke application a 5/2-way valve controls the cylinder. The speed can be controlled separately for both directions.

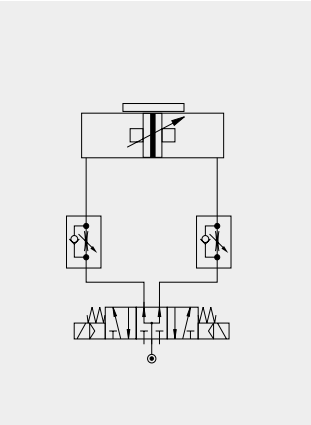

If a 5/3-way valve (with pressurised middle position) is used to control the cylinder, it is possible to stop at intermediate positions.

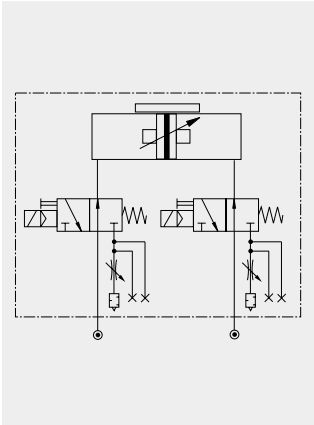

The optional integrated VOE Valves offer optimal control, and allow accurate positioning of intermediate positions and the lowest possible speeds.

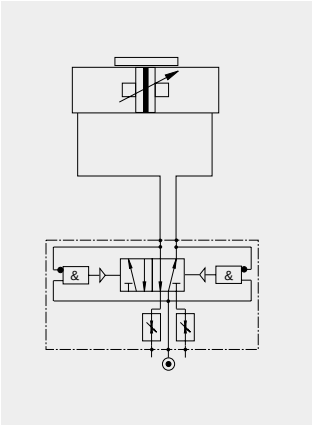

HOERBIGER-ORIGA‘s pneumatic oscillating valve allows automatic reciprocating motion, with full control of the oscillating motion‘s speed in both directions. This solution does not require any sensors or other pneumatic accessories.

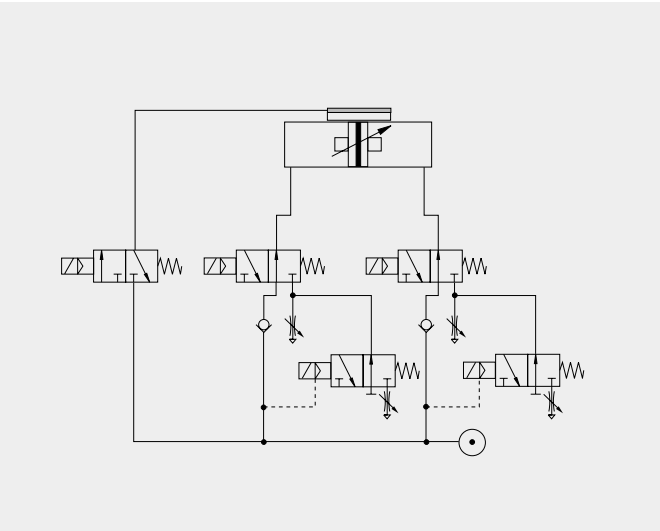

Fast/Slow speed cycle control with pneumatic brake for accurate positioning at high velocities.
Additional 3/2-way valves with adjustable throttle valves at the exhaust of the standard directional control valves for two displacement speeds in each direction of the piston‘s travel.
The valve controlling the brake is activated after the slow speed cycle is activated

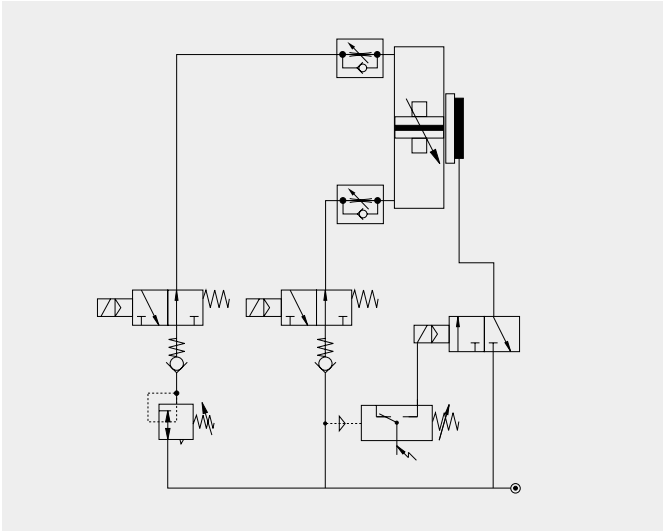

The combination of an OSP cylinder with the passive MULTIBRAKE as shown here, allows accurate positioning and safety in case of loss of pneumatic air pressure.

OSP-P APPLICATION EXAMPLES

ORIGA SYSTEM PLUS – rodless linear drives offer maximum flexibility for any application.

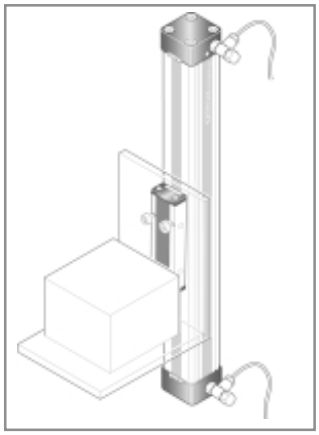

The high load capacity of the piston can cope with high bending moments without additional guides.

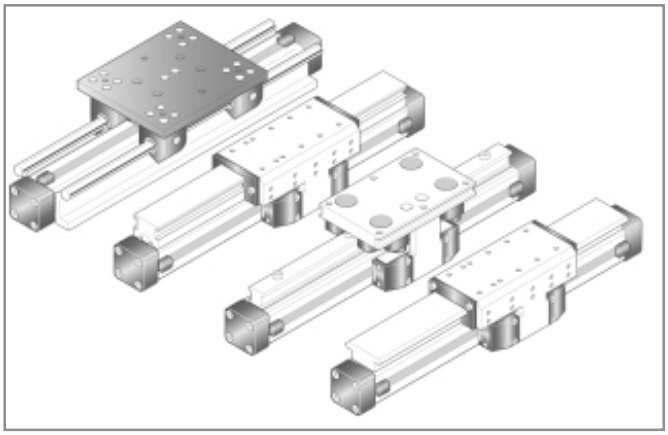

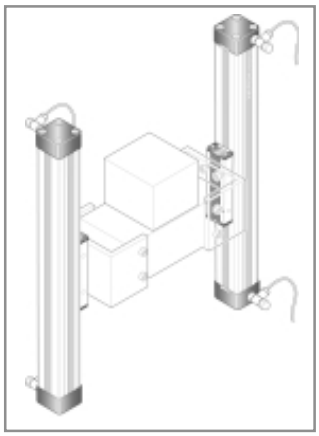

The mechanical design of the OSP-P allows synchronised movement of two cylinders.

Integrated guides offer optimal guidance for applications requiring high performance, easy assembly and maintenance free operation.

Optimal system performance by combining multi-axis cylinder combinations.

When using external guides, the clevis mounting is used to compensate for deviations in parallelism.

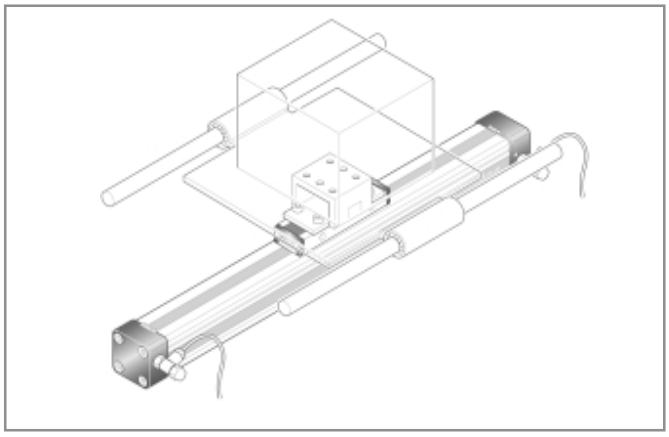

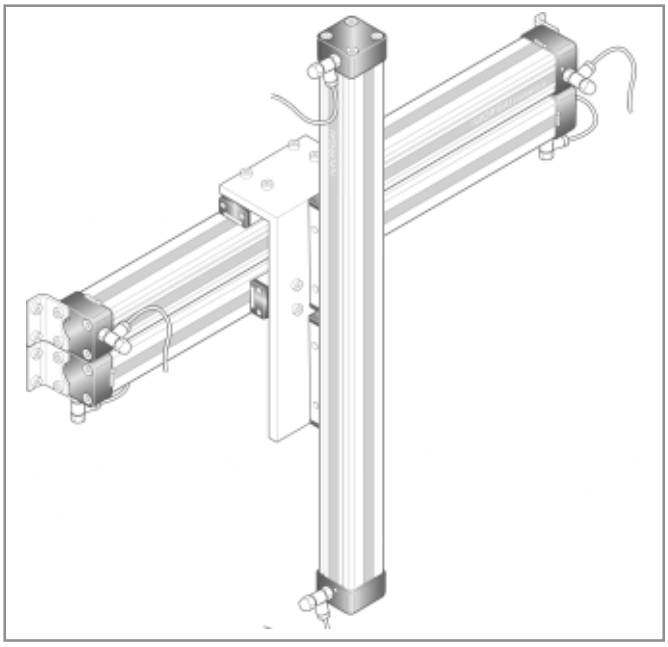

For further information and assembly instructions, please contact your local HOERBIGER-ORIGA dealer.

Rodless Pneumatic Cylinders
Series OSP-P

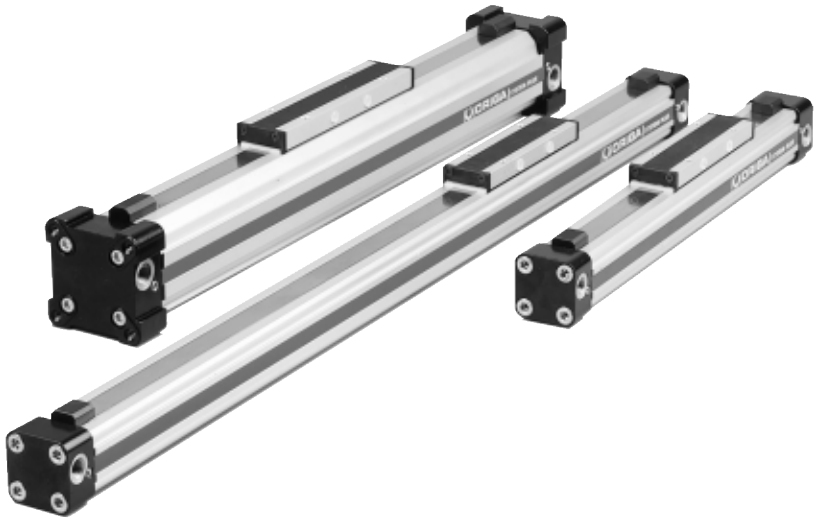

Contents

Description	Data Sheet No.	Page
Overview	1.10.001E	10-12
Technical Data	1.10.002E-1 to 3	13-15
Dimensions	1.10.002E-4 to 9	16-21
Order Instructions	1.10.002E-10	22

HOERBIGER-ORIGA GMBH · Südliche Römerstraße 15 · D-86972 Altenstadt · Tel. +49 +8861 221-0 · Fax +49 +8861 221-1305 · E-mail preu@hoerbiger.de
HOERBIGER-ORIGA GMBH · Industriestr. 8 · D-70794 Filderstadt · Tel. +49 +7158 1703-0 · Fax +49 +7158 64870 · E-mail dmarket@hoerbiger-origa.com
HOERBIGER-ORIGA LTD. · Tewkesbury Industrial Estate · Tewkesbury GL 20 8 ND GB · Tel. +44 1684 85 00 00 · Fax +44 1684 85 05 55
E-mail sales@hoerbiger-origa.com
HOERBIGER-ORIGA Pneumatik GmbH · Dr. Alexander-Schärf-Straße 12 · A-2700 Wiener Neustadt · Tel. +43 +2622 26071-0 · Fax +43 +2622 26071-5
E-mail amarket@hoerbiger-origa.com
HOERBIGER-ORIGA AB · Kungsgatan 10, Box 67 · SE-73622 Kungsör · Tel. +46 227 411 00 · Fax +46 227 411 29 · E-mail semarket@hoerbiger-origa.com
Internet http://www.hoerbiger-origa.com

The
System Concept

ORIGA SYSTEM PLUS – INNOVATION FROM A PROVEN DESIGN

A completely new generation of linear drives which can be simply and neatly integrated into any machine layout.

A NEW MODULAR LINEAR DRIVE SYSTEM

With this second generation linear drive HOERBIGER-ORIGA offers design engineers complete flexibility. The well known ORIGA cylinder has been further developed into a combined linear actuator, guidance and control package. It forms the basis for the new, versatile ORIGA SYSTEM PLUS linear drive system.

All additional functions are designed into modular system components which replace the previous series of cylinders.

MOUNTING RAILS ON 3 SIDES

Mounting rails on 3 sides of the cylinder enable modular components such as linear guides, brakes, valves, sensors etc. to be fitted to the cylinder itself. This solves many installation problems, especially where space is limited.
The modular system concept forms an ideal basis for additional customer-specific functions.

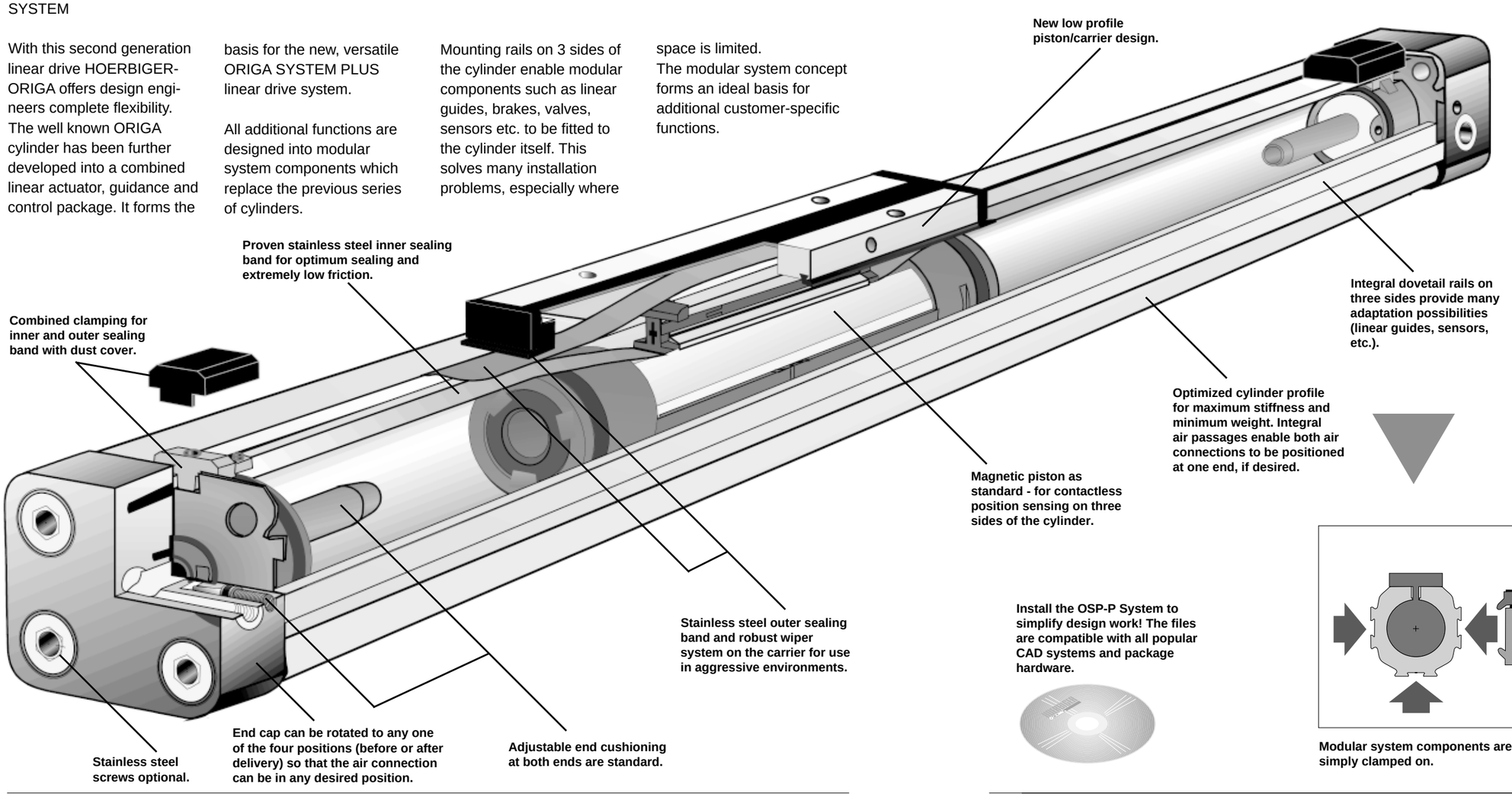

The Components

PNEUMATIC LINEAR ACTUATOR WITH NEW MODULAR SYSTEM

PROLINE
The compact aluminium roller guide for high loads and velocities.

INTEGRATED VOE VALVES
The complete compact solution for optimal cylinder control.

SLIDELINE
Combination with linear guides provides for heavier loads.

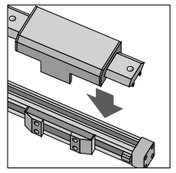

POWERSLIDE
Roller bearing precision guidance for smooth travel and high dynamic or static loads.

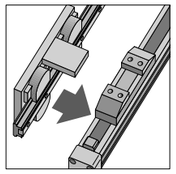

GUIDELINE
linear guides for heavy duty applications.

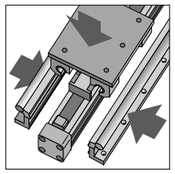

SENSOFLEX SFI
incremental measuring system with 1mm resolution.

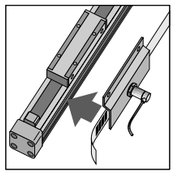

SENSOFLEX SFA
analogue measuring system. Simple and robust for high accuracy applications.

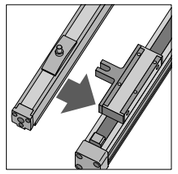

SERVOTEC
electro/pneumatic positioning system.

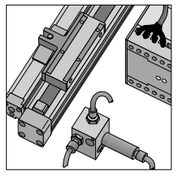

Active pneumatic brake for secure, positive stopping at any position.

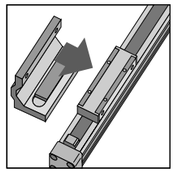

Passive pneumatic brake reacts automatically to pressure failure.

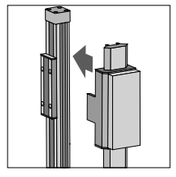

Shock absorbers for smooth absorption of high energy at end of stroke or as adjustable stops.

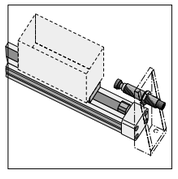

Install the OSP-P System to simplify design work! The files are compatible with all popular CAD systems and package hardware.

Modular system components are simply clamped on.

OPTIONS AND ACCESSORIES FOR SYSTEM VERSATILITY

SERIES OSP-P

STANDARD VERSIONS OSP-P10 to P80

Data Sheet 1.10.002E-1, -2, -3

Standard carrier with integral guidance. End cap can be rotated 4x90° to position air connection on any side.
Magnetic piston as standard.
Dovetail profile for mounting of accessories and the cylinder itself.

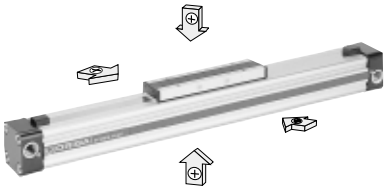

BASIC CYLINDER OPTIONS

STAINLESS VERSION

For use in constantly damp or wet environments. All screws are A2 quality stainless steel (material no. 1.4301 / 1.4303).

SLOW SPEED OPTIONS

Specially formulated grease lubrication facilitates slow, smooth and uniform piston travel in the speed range from 0.005 to 0.2 m/s. Minimum achievable speeds are dependent on several factors. Please consult our technical department. Slow speed lubrication in combination with Viton® on demand. Oil free operation preferred.

VITON® VERSION

For use in an environment with high temperatures or in chemically aggressive areas. All seals are made of Viton®. Sealing bands: Stailess steel

END-FACE AIR CONNECTION

Data Sheet 1.10.002E-6

To solve special installation problems.

BOTH AIR CONNECTIONS AT ONE END

Data Sheet 1.10.002E-7

For simplified tubing connections and space saving.

INTEGRATED VOE VALVES

Data Sheet1.10.002E-8

The complete compact solution for optimal cylinder control.

ACCESSORIES

PROXIMITY SENSORS TYPE RS AND ES

Data Sheet 1.45.100E

For electrical sensing of end and intermediate piston positions.

MOUNTINGS FOR OSP-P10 to P80

CLEVIS MOUNTING

Data Sheet 1.45.002E

Carrier with tolerance and parallelism compensation for driving loads supported by external linear guides.

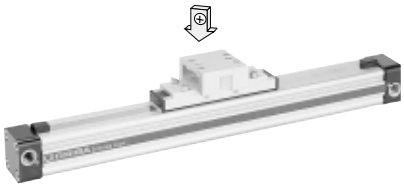

END CAP MOUNTING

Data Sheet 1.45.003E

For end-mounting of the cylinder.

MID-SECTION SUPPORT

Data Sheet 1.45.004E

For supporting long cylinders or mounting the cylinder by its dovetail rails.

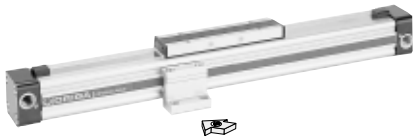

INVERSION MOUNTING

Data Sheet 1.45.006E

The inversion mounting, transfers the driving force to the opposite side, e. g. for dirty environments.

A3P101E00KAA00X

The right to introduce technical modifications is reserved

Rodless Pneumatic Cylinder

ø 10-80 mm

OSP
ORIGA SYSTEM PLUS

Standard Versions:
- Double-acting with adjustable end cushioning
- With magnetic piston for position sensing

Special Versions:
- Stainless steel screws
- Slow speed lubrication
- Viton seals
- Both air connections on one end
- Air connection on the end-face
- Integrated Valves

Series OSP-P..

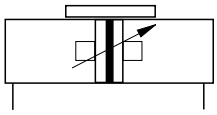

- End cap can be rotated 4 x 90° to position air connection as desired
- Free choice of stroke length up to 6000 mm (longer strokes on request)

Characteristics according to VDI 3292 Pressures quoted as gauge pressure

Characteristics		Symbol	Unit	Description	
General Features					
Type				Rodless cylinder	
Series				OSP-P	
System				Double-acting, with cushioning, position sensing capability	
Mounting				See drawings	
Air Connection				Threaded	
Ambient temperature range		ϑ_{min} ϑ_{max}	°C °C	-10 +80	Other temperature ranges on request
Weight (mass)			kg	See table below	
Installation				In any position	
Medium				Filtered, unlubricated compressed air (other media on request)	
Lubrication				Permanent grease lubrication (additional oil mist lubrication not required) Option: special slow speed grease	
Material	Cylinder Profile			Anodized aluminium	
	Carrier (piston)			Anodized aluminium	
	End caps			Aluminium, lacquered	
	Sealing bands			Stainless steel	
	Seals			NBR (Option: Viton®)	
	Screws			Galvanized steel Option: stainless steel	
	Dust covers, wipers			Plastic	
Max. operating pressure		p_{max}	bar	8	

Weight (mass) kg

Cylinder series (Basic cylinder)	Weight (Mass) kg At 0 mm stroke	per 100 mm stroke
OSP-P10	0.087	0.052
OSP-P16	0.22	0.1
OSP-P25	0.65	0.197
OSP-P32	1.44	0.354
OSP-P40	1.95	0.415
OSP-P50	3.53	0.566
OSP-P63	6.41	0.925
OSP-P80	12.46	1.262

Size Comparison

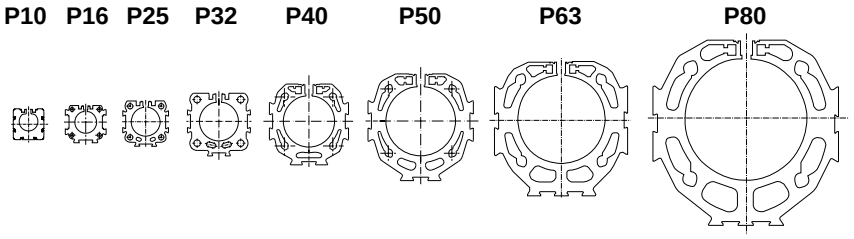

For **linear guides** see 1.40.001E to 005E
For **proximity sensors** see 1.45.100E,
For **mountings** and **accessories** see 1.45.001E to 009E

HOERBIGER ORIGA

A1P537E00KAA00X

The right to introduce technical modifications is reserved

Loads, Forces and Moments

Choice of cylinder is decided by:

- Permissible loads, forces and moments
- Performance of the pneumatic end cushions. The main factors here are the mass to be cushioned and the piston speed at start of cushioning
  (unless external cushioning is used, e. g. hydraulic shock absorbers).

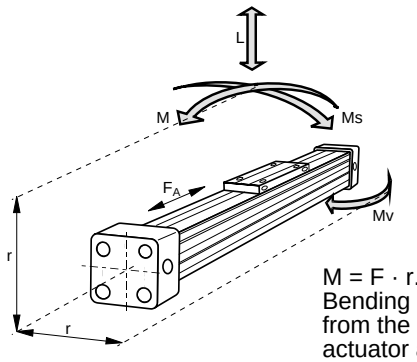

M = F · r.
Bending moments are calculated from the centre of the linear actuator and F indicates actual force.

The adjacent table shows the maximum values for light, shock-free operation, which must not be exceeded even in dynamic operation. **Load and moment data are based on speeds v ≤ 0.5 m/s.**

Cylinder-Series [mm Ø]	Theoretical Action Force at 6 bar [N]	effektive Action Force F_A at 6 bar [N]	max. Moments M [Nm]	Ms [Nm]	Mv [Nm]	max. Load L [N]	Cushion Length [mm]
OSP-P10	47	32	1	0.2	0.3	20	2.5 *
OSP-P16	120	78	4	0.45	0.5	120	11
OSP-P25	295	250	15	1.5	3	300	17
OSP-P32	483	420	30	3	5	450	20
OSP-P40	754	640	60	6	8	750	27
OSP-P50	1178	1000	115	10	15	1200	30
OSP-P63	1870	1550	200	12	24	1650	32
OSP-P80	3016	2600	360	24	48	2400	39

* A rubber element (non-adjustable) is used for end cushioning.
To deform the rubber element enough to reach the absolute end position would require a Δp of 4 bar!

Cushioning Diagram

Work out your expected moving mass and read off the maximum permissible speed at start of cushioning.
Alternatively, take your desired speed and expected mass and find the cylinder size required.
Please note that piston speed at start of cushioning is typically ca. 50 % higher than the average speed, and that it is this higher speed which determines the choice of cylinder. If these maximum permissible values are exceeded, additional shock absorbers must be used.

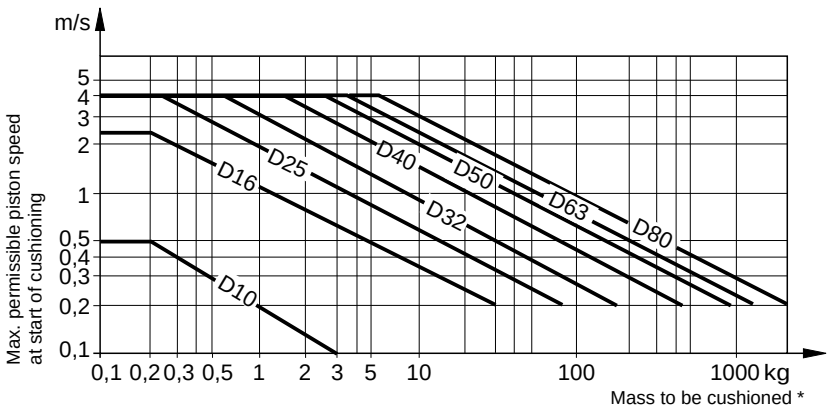

* For cylinders with linear guides or brakes, please be sure to take the mass of the carriage or the brake housing into account.

If the permitted limit values are exceeded, either additional shock absorbers should be fitted in the area of the centre of gravity or you can consult us about our special cushioning system – we shall be happy to advise you on your specific application.

Mid-Section Supports

To avoid excessive bending and oscillation of the cylinder, mid-section supports are required dependent on specified stroke lengths and applied loads.The diagrams show the maximum possible support spacings depending on the load.
Bending up to max. 0.5 mm is permissible between supports. The mid-section supports are clamped onto the dovetail profile of the cylinder tube. They are also able to take the axial forces.
For types and dimensions see 1.45.004E.

Permissible Support Spacings: OSP - P10 - P32

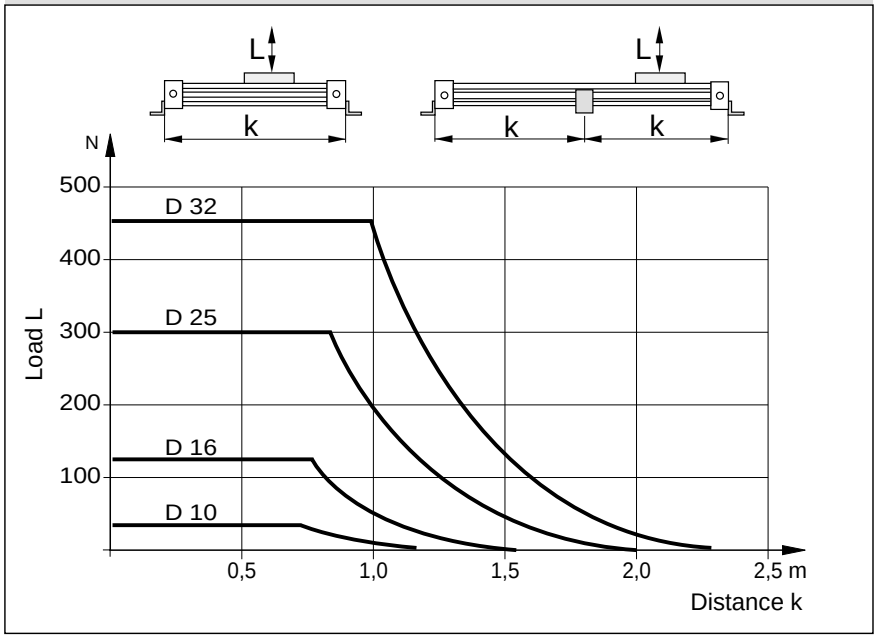

Permissible Support Spacings: OSP - P40 - P80

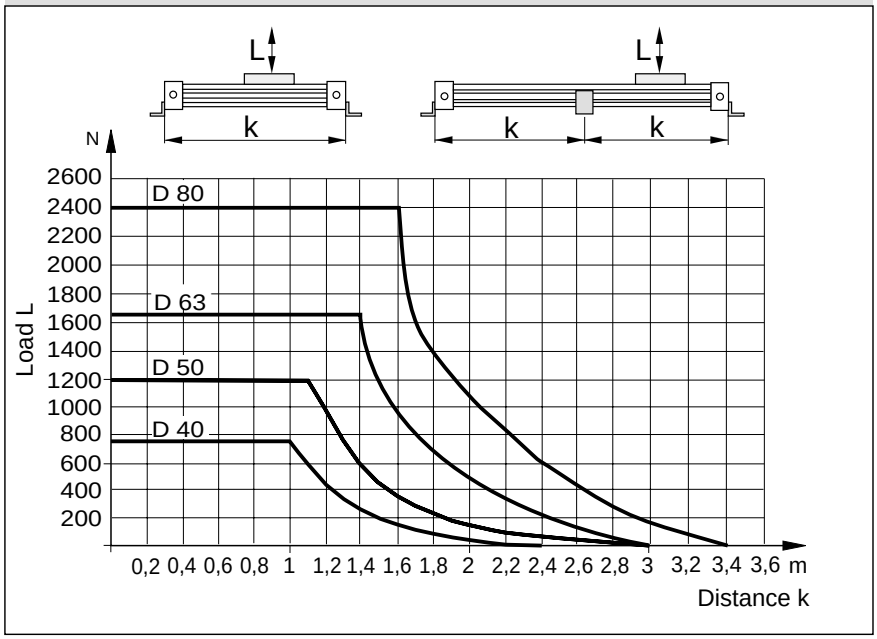

Cylinder
Stroke and Dead Length A

- Free choice of stroke length up to 6000 mm in 1 mm steps.
- Longer strokes on request.

Dimensions of Basic Cylinder OSP-P10

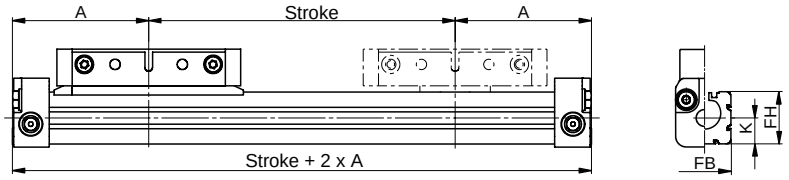

Tandem Cylinder

Two pistons are fitted: dimension "Z" is optional. (Please note minimum distance "Zmin").

- Free choice of stroke length up to 6000 mm in 1 mm steps.
- Longer strokes on request.
- **Stroke length to order is stroke + dimension "Z"**

Please note:

To avoid multiple actuation of sensors, the second piston is not equipped with magnets.

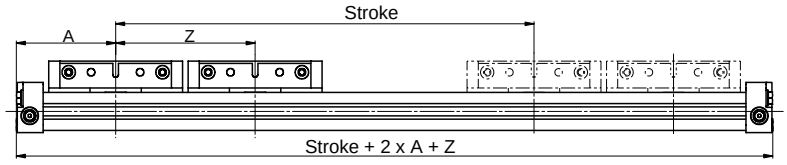

End Cap/Air Connection Series OSP -P10

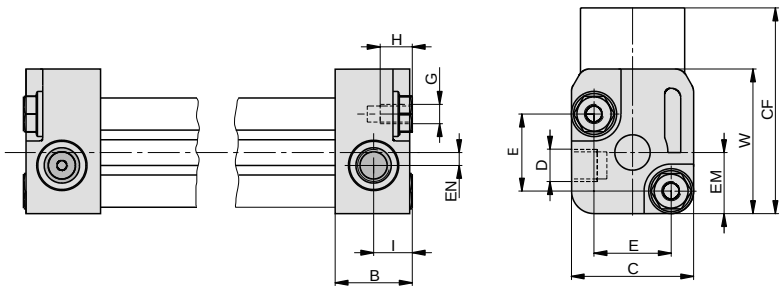

Carrier Series OSP-P10

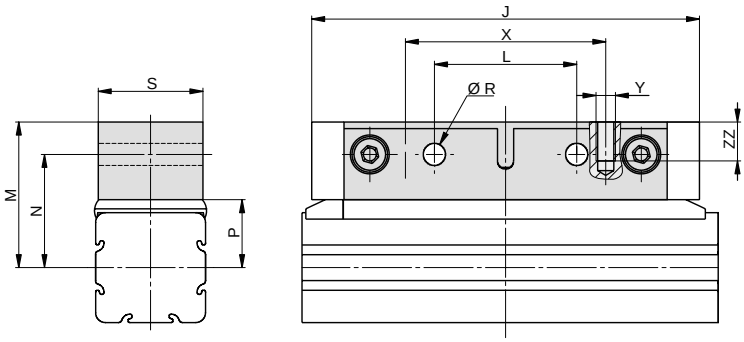

Dimension Table (mm)

Cylinder Series	A	B	C	D	E	G	H	I	J	K	L	M	N	P	R	S	W	X	Y	Z min	CF	EM	EN	FB	FH	ZZ
OSP-P10	44,5	12	19	M5	12	M3	5	6	60	8.5	22	22.5	17.5	21.5	3.4	16	21.5	31	M3	64	32	9.5	2	17	17	6

Dimensions of Basic Cylinder OSP - P16-P80

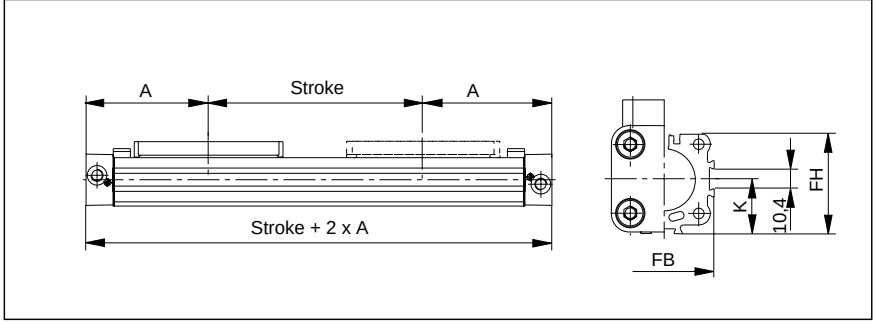

Cylinder
Stroke and Dead Length A

- Free choice of stroke length up to 6000 mm in 1 mm steps.
- Longer strokes on request.

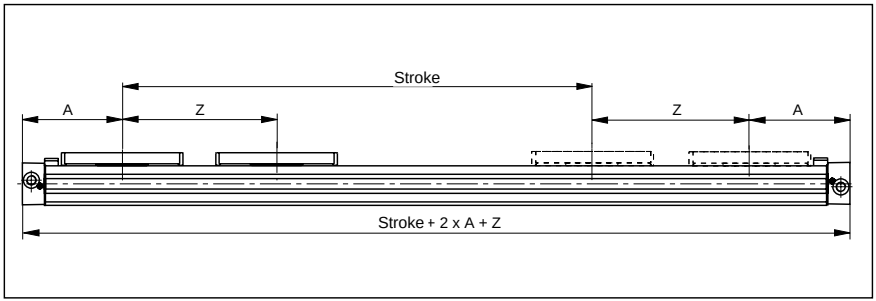

Tandem Cylinder

Two pistons are fitted: dimension "Z" is optional. (Please note minimum distance "Zmin").

- Free choice of stroke length up to 6000 mm in 1 mm steps.
- Longer strokes on request.
- **Stroke length to order is stroke + dimension "Z"**

End Cap/Air Connection can be rotated 4 x 90°
Series OSP-P16 to P32

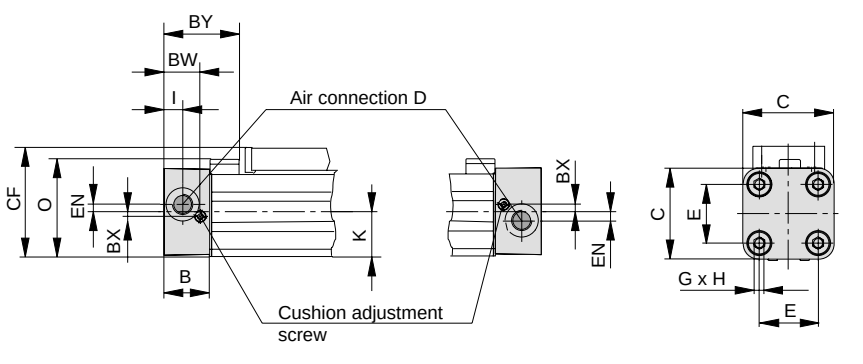

Please note:

To avoid multiple actuation of sensors, the second piston is not equipped with magnets.

End Cap/Air Connection can be rotated 4 x 90°
Series OSP-P40 to P80

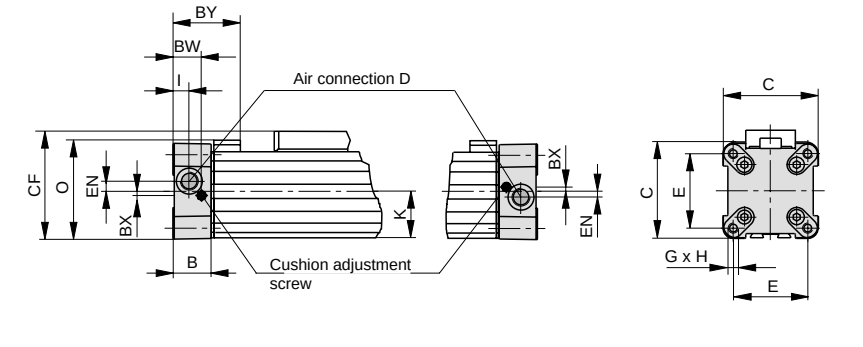

Carrier
Series OSP-P16 to P80

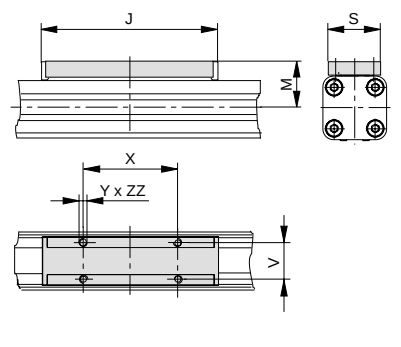

Dimension Table (mm)

Cylinder Series	A	B	C	D	E	G	H	I	J	K	M	O	S	V	X	Y	Z min	BW	BX	BY	CF	EN	FB	FH	ZZ
OSP-P16	65	14	30	M5	18	M3	9	5.5	69	15	23	33.2	22	16.5	36	M4	81	10.8	1.8	28.4	38	3	30	27.2	7
OSP-P25	100	22	41	G1/8	27	M5	15	9	117	21.5	31	47	33	25	65	M5	128	17.5	2.2	40	52.5	3.6	40	39.5	8
OSP-P32	125	25.5	52	G1/4	36	M6	15	11.5	152	28.5	38	59	36	27	90	M6	170	20.5	2.5	44	66.5	5.5	52	51.7	10
OSP-P40	150	28	69	G1/4	54	M6	15	12	152	34	44	72	36	27	90	M6	212	21	3	54	78.5	7.5	62	63	10
OSP-P50	175	33	87	G1/4	70	M6	15	14.5	200	43	49	86	36	27	110	M6	251	27	–	59	92.5	11	76	77	10
OSP-P63	215	38	106	G3/8	78	M8	21	14.5	256	54	63	107	50	34	140	M8	313	30	–	64	117	12	96	96	16
OSP-P80	260	47	132	G1/2	96	M10	25	22	348	67	80	133	52	36	190	M10	384	37.5	–	73	147	16.5	122	122	20

Air Connection on the End-face

In some situations it is necessary or desirable to fit a special end cap with the air connection on the end-face instead of the standard end cap with the air connection on the side. The special end cap can also be rotated 4 x 90° to locate the cushion adjustment screw as desired. Supplied in pairs.

Series OSP-P16 to P32

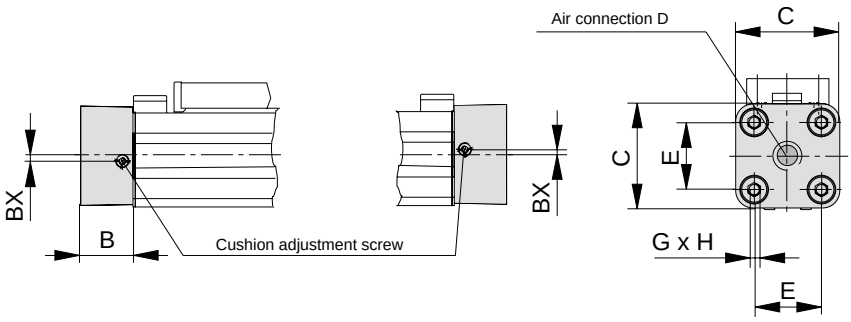

Series OSP-P40 to P80

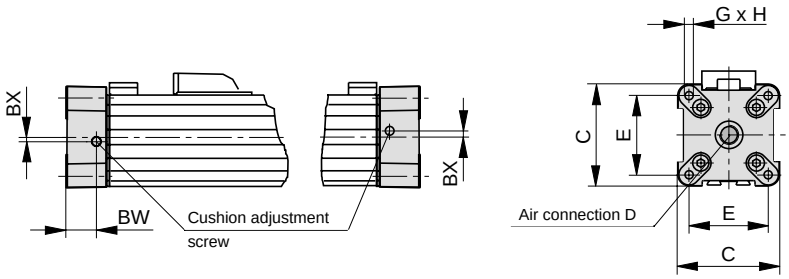

Dimension Table (mm)

Cylinder Series	B	C	D	E	G	H	BX	BW
OSP-P16	14	30	M5	18	M3	9	1.8	10.8
OSP-P25	22	41	G1/8	27	M5	15	2.2	17.5
OSP-P32	25.5	52	G1/4	36	M6	15	2.5	20.5
OSP-P40	28	69	G1/4	54	M6	15	3	21
OSP-P50	33	87	G1/4	70	M6	15	–	27
OSP-P63	38	106	G3/8	78	M8	21	–	30
OSP-P80	47	132	G1/2	96	M10	25	–	37.s5

Series OSP-P16

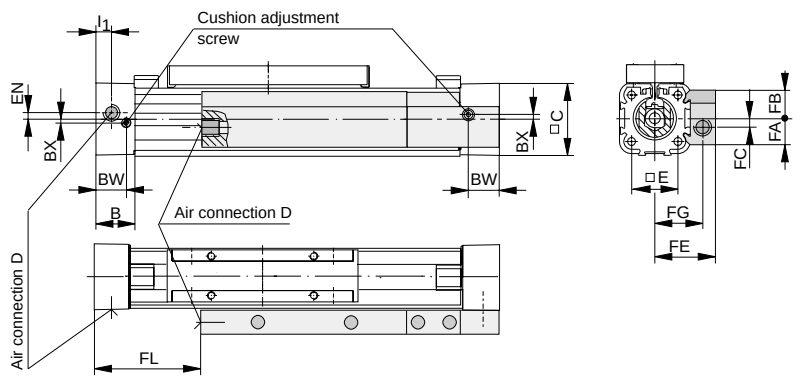

Both Air Connections at One End

A special end cap with both air connections on one side is available for situations where shortage of space, simplicity of installation or the nature of the process make it desirable.
Air supply to the other end is via internal air passages (OSP-P25 to P80) or via a hollow aluminium profile fitted externally (OSP-P16).
In this case the end caps cannot be rotated.

Series OSP-P25

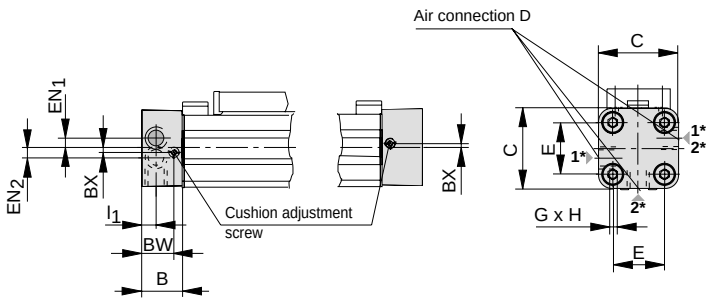

* Versions of Air Connection Positions : 1→1 oder 2→2

Please note:

When combining the OSP-P16 single end porting with inversion mountings, RS switches can only be mounted directly opposite to the external air-supply profile.

Series OSP-P32 to P80

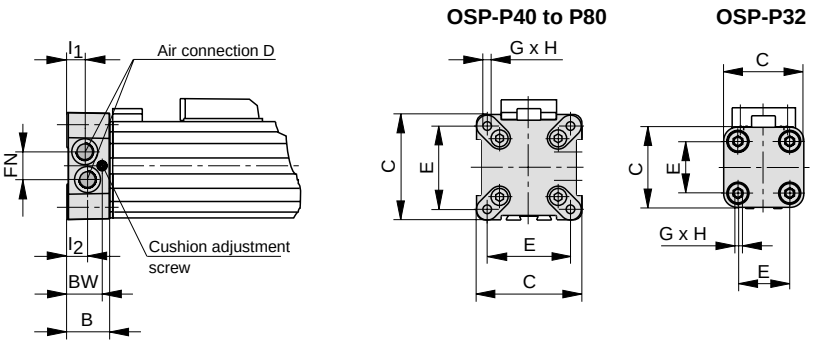

Dimension Table (mm)

Cylinder Series		B	C	D	E	G	H	l_1	l_2	BX	BW	EN	EN_1	EN_2	FA	FB	FC	FE	FG	FL	FN
OSP-P16		14	30	M5	18	M3	9	5.5	–	1.8	10.8	3	–	–	12.6	12.6	4	27	21	36	–
OSP-P25		22	41	G1/8	27	M5	15	9	–	2.2	17.5	–	3.6	3.9	–	–	–	–	–	–	–
OSP-P32		25.5	52	G1/8	36	M6	15	12.2	10.5	–	20.5	–	–	–	–	–	–	–	–	–	15.2
OSP-P40		28	69	G1/8	54	M6	15	12	12	–	21	–	–	–	–	–	–	–	–	–	17
OSP-P50		33	87	G1/4	70	M6	15	14.5	14.5	–	27	–	–	–	–	–	–	–	–	–	22
OSP-P63		38	106	G3/8	78	M8	21	16.5	13.5	–	30	–	–	–	–	–	–	–	–	–	25
OSP-P80		47	132	G1/2	96	M10	25	22	17	–	37.5	–	–	–	–	–	–	–	–	–	34.5

Integrated 3/2 Way Valves VOE

For optimal control of the OSP-P cylinder, 3/2 way valves integrated into the cylinder's end caps can be used as a compact and complete solution.
They allow for easy positioning of the cylinder, smooth operation at the lowest speeds and fast response, making them ideally suited for the direct control of production and automation processes.

Integrated 3/2 Way Valves VOE Series OSP-P25, P32, P40 and P50

Characteristics:

- Complete compact solution
- Various connection possibilities: Free choice of air connection with rotating end caps with VOE valves, Air connection can be rotated 4x90°, Solenoid can be rotated 4x90°, Pilot valve can be rotated 180°
- High piston velocities can be achieved with max. 3 exhaust ports
- Minimal installation requirements
- Requires just one air connection per valve
- Optimal control of the OSP-P cylinder
- Excellent positioning characteristics
- Integrated operation indicator.
- Integrated exhaust throttle valve
- Manual override - indexed
- Adjustable end cushioning
- Easily retrofitted – please note the increase in the overall length of the cylinder!

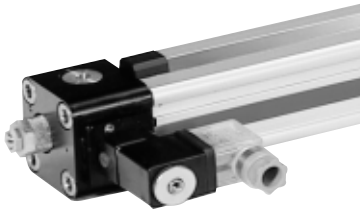

Characteristics 3/2 Way Valves VOE

Characteristics	3/2 Way Valves with spring return			
Pneumatic diagram	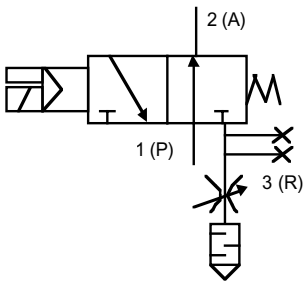		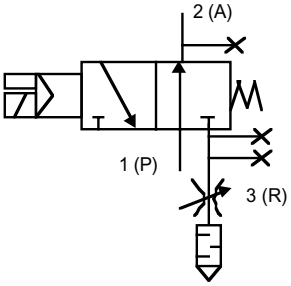	
Type	VOE-25	VOE-32	VOE-40	VOE-50
Actuation	electrical			
Basic position	P → A open, R closed			
Type	Poppet valve, non overlapping			
Mounting	integrated in end cap			
Installation	in any position			
Port size	G 1/8	G 1/4	G 3/8	G 3/8
Temperature	-10°C to +50°C *			
Operating pressure	2-8 bar			
Nominal voltage	24 V DC / 230 V AC, 50 Hz			
Power consumption	2,5 W / 6 VA			
Duty cycle	100%			
Electrical Protection	IP 65 DIN 40050			

* other temperature ranges on request

Dimensions VOE Valves OSP-P25 and P32

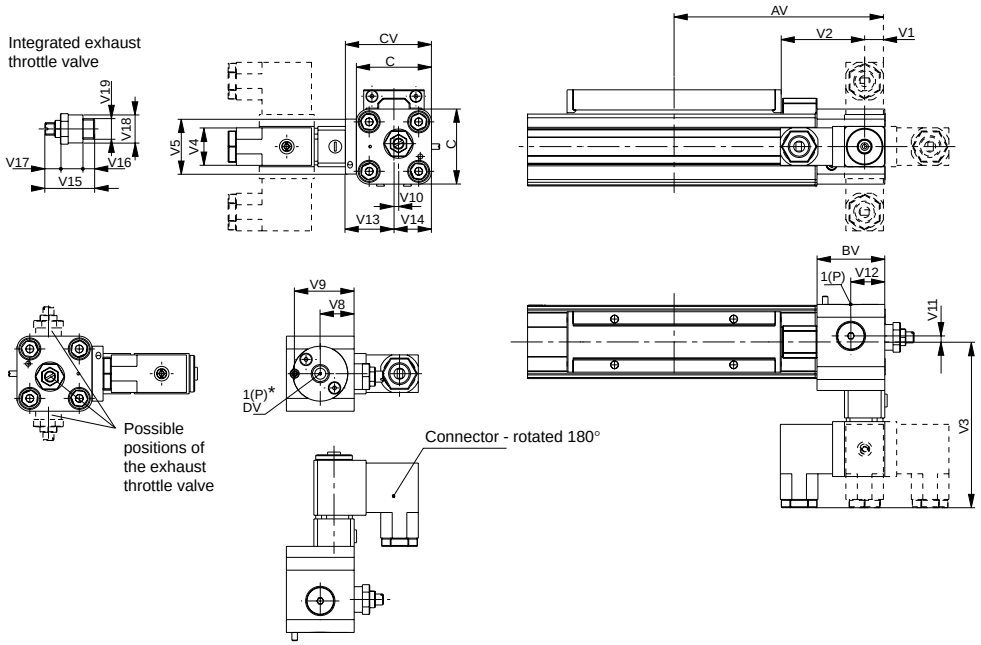

* End cap can be rotated 4x90°

Dimension Table (mm)

Cylinder Series	AV	BV	C	CV	DV	V1	V2	V3	V4	V5	V8	V9	V10	V11	V12	V13	V14	V15	V16	V17	V18	V19
OSP-P25	115	37	41	47	G1/8	11	46	90.5	22	30	18.5	32.5	2.5	3.3	18.5	26.5	20.5	24	5	4	14	G1/8
OSP-P32	139	39.5	52	58	G1/4	20.5	46	96	22	32	20.5	34.7	6	5	20.5	32	26	32	7.5	6	18	G1/4

Dimensions VOE Valves OSP-P40 and P50

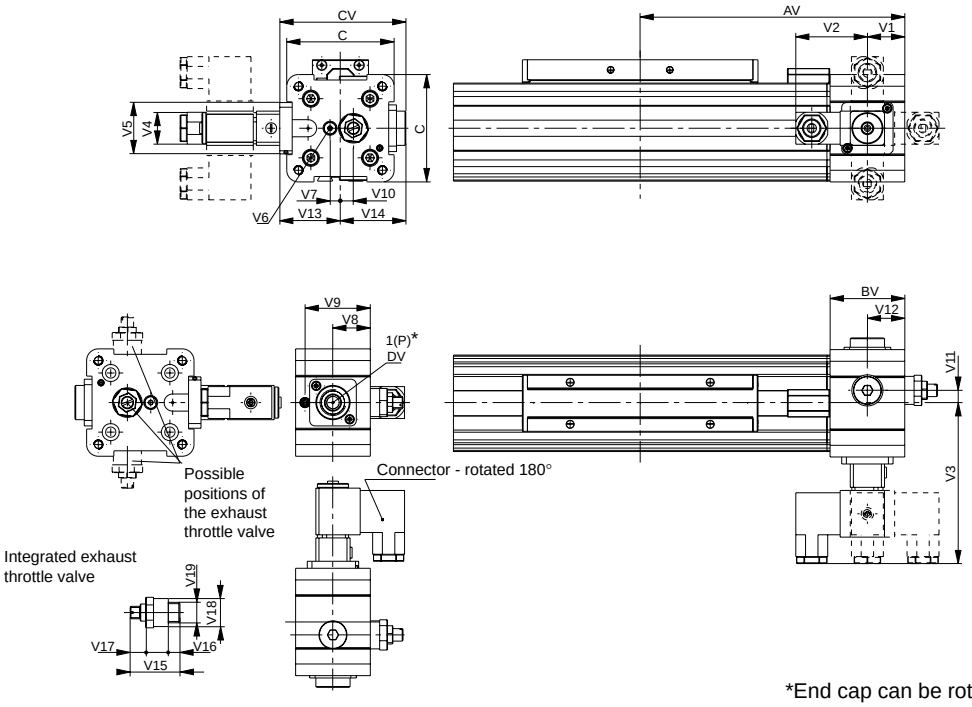

*End cap can be rotated 4x90°

Dimension Table (mm)

Cylinder Series	AV	BV	C	CV	DV	V1	V2	V3	V4	V5	V6	V7	V8	V9	V10	V11	V12	V13	V14	V15	V16	V17	V18	V19
OSP-P40	170	48	69	81	G3/8	24	46	103	22	33	M5	6.7	24	42	8.3	8.3	24	39	42	32	7.5	6	18	G1/4
OSP-P50	190	48	87	82	G3/8	24	46	102	22	33	M5	4.5	24	42	12.2	12.2	24	38	44	32	7.5	6	18	G1/4

Order Instructions – Basic Cylinder

Basic Cylinder

OSP-P	25 –	0	0	0	0	0 –	01000

Piston Diameter

10 = 10 mm	40 = 40 mm
16 = 16 mm	50 = 50 mm
25 = 25 mm	63 = 63 mm
32 = 32 mm	80 = 80 mm

Piston Mounting

0 = Standard
1 = Tandem

Air Connections

0 = Standard	A = VOE 24 V =
1 = On the end-face	B = VOE 230 V ~/ 110 =
2 = Both at one end	C = VOE 48 V =
	E = VOE 110 V ~

Seals

0 = Standard (NBR)
1 = Viton ®

Stroke Length

In mm (5 digits)

Screws

0 = Standard (galvanized steel)
1 = Stainless steel

Grease Lubrication

0 = Standard
1 = Slow [1)]

[1)] Slow speed lubrication in combination with Viton® seals on demand.

Accessories - please order separately

Description	Further information see Data Sheet No.
Clevis Mounting	**1.45.002E**
End Cap Mountings	**1.45.003E**
Mid-Section Support	**1.45.004E**
Inversion Mounting	**1.45.006E**
Adaptor Profile	**1.45.007E**
T-Nut Profile	**1.45.008E**
Adaptor Profile	**1.45.009E**
Proximity Sensors	**1.45.100E**

Linear Guides
Series OSP-P

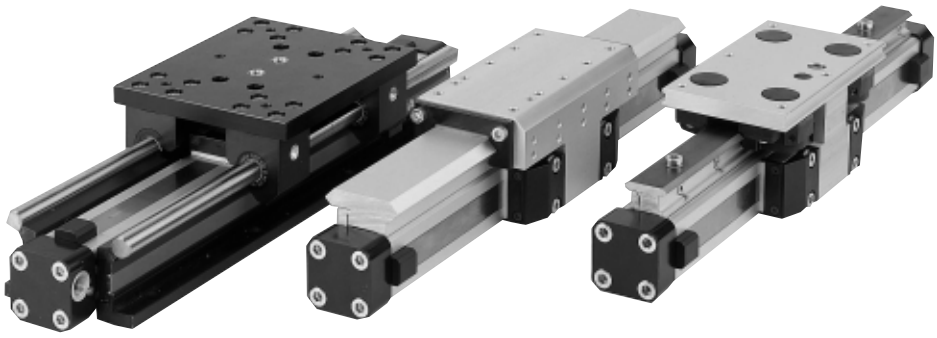

Contents

Description	Data Sheet No.	Page
Overview	1.40.001E	23-24
Plain bearing guide SLIDELINE	1.40.002E	25-26
Roller guide POWERSLIDE	1.40.003E	27-30
Ball bushing guide GUIDELINE	1.40.004E	31-34
Aluminium roller guide PROLINE	1.40.005E	35-36

HOERBIGER-ORIGA GMBH · Südliche Römerstraße 15 · D-86972 Altenstadt · Tel. +49 +8861 221-0 · Fax +49 +8861 221-1305 · E-mail preu@hoerbiger.de
HOERBIGER-ORIGA GMBH · Industriestr. 8 · D-70794 Filderstadt · Tel. +49 +7158 1703-0 · Fax +49 +7158 64870 · E-mail dmarket@hoerbiger-origa.com
HOERBIGER-ORIGA LTD. · Tewkesbury Industrial Estate · Tewkesbury GL 20 8 ND GB · Tel. +44 1684 85 00 00 · Fax +44 1684 85 05 55
E-mail sales@hoerbiger-origa.com
HOERBIGER-ORIGA Pneumatik GmbH · Dr. Alexander-Schärf-Straße 12 · A-2700 Wiener Neustadt · Tel. +43 +2622 26071-0 · Fax +43 +2622 26071-5
E-mail amarket@hoerbiger-origa.com
HOERBIGER-ORIGA AB · Kungsgatan 10, Box 67 · SE-73622 Kungsör · Tel. +46 227 411 00 · Fax +46 227 411 29 · E-mail semarket@hoerbiger-origa.com
Internet http://www.hoerbiger-origa.com

OSP

ORIGA
SYSTEM
PLUS

Linear Guides

Pneumatic Linear Drive
– Series OSP - P

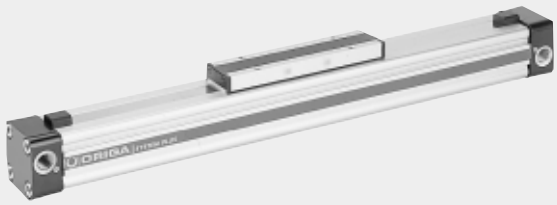

Adaptive modular system

The Origa system plus – OSP – provides a comprehensive range of linear guides for the pneumatic and electric linear drives.

Versions:

Pneumatic linear drive
Series OSP - P

- Piston diameters:
  16 - 25 - 32 - 40 - 50 - 63 mm

Advantages:

- Takes high loads and forces
- High precision
- Smooth operation
- Can be retrofitted
- Can be installed in any position

SLIDELINE
The cost-effective plain bearing guide for medium loads.
Brake optional.

POWERSLIDE
The roller guide for heavy loads.

GUIDELINE
The ball bushing guide for the heaviest loads and greatest accuracy.

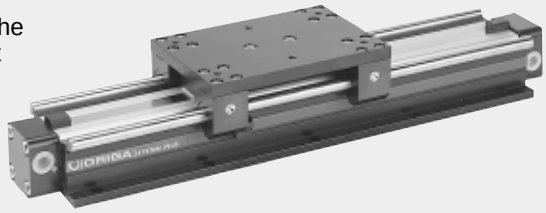

PROLINE
The compact aluminium roller guide for high loads and velocities.
Optional with brake.

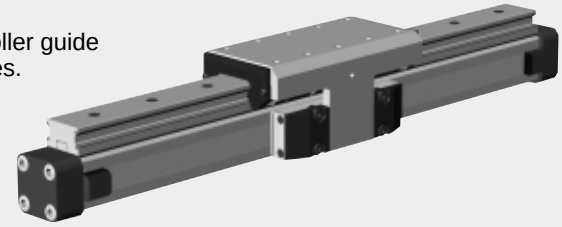

Plain Bearing Guide SLIDELINE

OSP
ORIGA SYSTEM PLUS

Versions

Standard versions
– for pneumatic linear drive: Series OSP-P

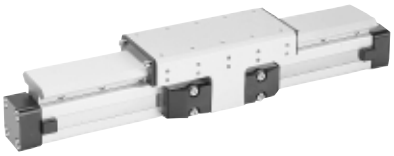

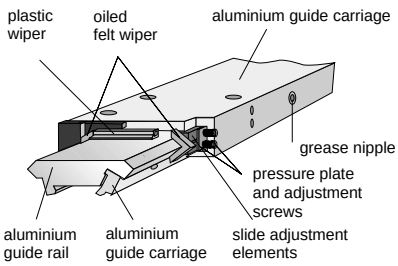

Series SL 16 to 80
for Linear-drive
• Series OSP-P

Features:

- Anodised aluminium guide rail with prism-shaped slideway arrangement
- Adjustable plastic slide elements – optional with integral brake
- Composite sealing system with plastic and felt wiper elements to remove dirt and lubricate the slideways.
- Corrosion resistant version available on request.
- Any length of stroke up to 5500 mm (longer strokes on request)

Option – Integrated Brake

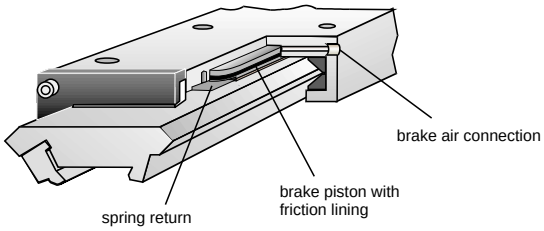

Loads, Forces and Moments

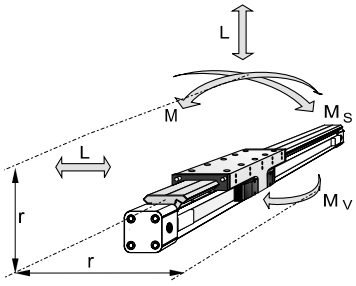

Technical Data

The table shows the maximum permissable values for smooth operation, which should not be exceeded even under dynamic conditions.

The load and moment figures apply to speeds v < 0.2 m/s.

*** Please note:**
In the cushioning diagram, add the mass of the guide carriage to the mass to be cushioned.

Integrated Brake (optional)
for series OSP-P25 to OSP-P50:
- Actuated by pressure
- Released by exhausting and spring return

For further technical data see also linear drives OSP-P (1.10.002E)

Series	For linear drive	Max. moments [Nm]			Max. loads [N]	Maximum braking force at 6 bar [N] [1]	Mass of linear drive with guide [kg]		Mass * of guide carriage [kg]	Order No. SLIDELINE [2] for	
		M	Ms	Mv	L		with 0 mm stroke OSP-P	increase per 100 mm stroke OSP-P		OSP-P without brake	OSP-P with brake
SL16	OSP-P16	11	6	11	325	–	0.57	0.22	0.23	**20341**	**–**
SL 25	OSP-P25	34	14	34	675	325	1.55	0.39	0.61	**20342**	**20409**
SL 32	OSP-P32	60	29	60	925	545	2.98	0.65	0.95	**20196**	**20410**
SL 40	OSP-P40	110	50	110	1500	835	4.05	0.78	1.22	**20343**	**20411**
SL50	OSP-P50	180	77	180	2000	1200	6.72	0.97	2.06	**20195**	**20412**
SL63	OSP-P63	260	120	260	2500	–	11.66	1.47	3.32	**20853**	**–**
SL80	OSP-P80	260	120	260	2500	–	15.71	1.81	3.32	**21000**	**–**

[1] Only with integrated brake: Braking force on dry oil-free surface
Values are decreased for lubricated slideways
[2] Corrosion resistant fixtures available on request

For **linear drives** see 1.10.002E
For **mountings** see 1.45.005E

HOERBIGER ORIGA

A1P539E00KAA00X
The right to introduce technical modifications is reserved

Dimensions

Series OSP-P

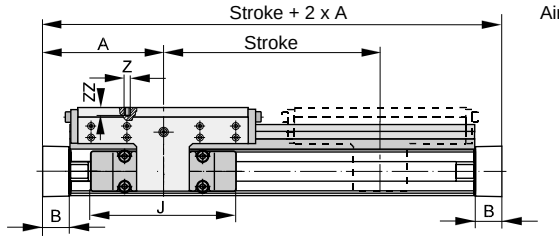

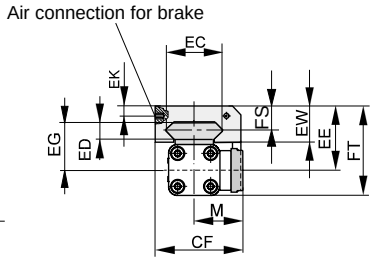

For further mounting elements and options see accessories.

For further information and technical data see data sheets for linear drives OSP-P (1.10.002E)

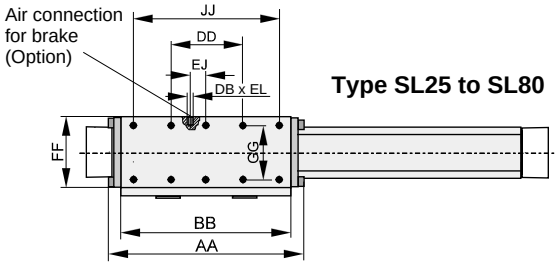

Type SL25 to SL80

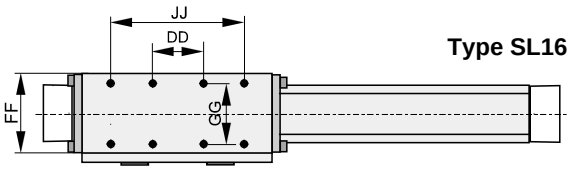

Type SL16

Dimension Table (mm)

Series	A	B	J	M	Z	AA	BB	DB	DD	CF	EC	ED	EE	EG	EJ	EK	EL	EW	FF	FT	FS	GG	JJ	ZZ
SL 16	65	14	69	31	M4	106	88	–	30	55	36	8	40	30	–	–	–	22	48	55	14	36	70	8
SL 25	100	22	117	40.5	M6	162	142	M5	60	72.5	47	12	53	39	22	6	6	30	64	73.5	20	50	120	12
SL 32	125	25.5	152	49	M6	205	185	M5	80	91	67	14	62	48	32	6	6	33	84	88	21	64	160	12
SL 40	150	28	152	55	M6	240	220	M5	100	102	77	14	64	50	58	6	6	34	94	98.5	21.5	78	200	12
SL 50	175	33	200	62	M6	284	264	M5	120	117	94	14	75	56	81	6	6	39	110	118.5	26	90	240	16
SL 63	215	38	256	79	M8	312	292	–	130	152	116	18	86	66	–	–	–	46	152	139	29	120	260	14
SL 80	260	47	348	96	M8	312	292	–	130	169	116	18	99	79	–	–	–	46	152	165	29	120	260	14

Mid-Section Support

(for versions see 1.45.005E)

Mid-section supports are required from a certain stroke length to prevent excessive deflection and vibration of the linear drive. The diagrams show the maximum permissable unsupported length in relation to loading.
A distinction must be drawn between loading 1 and loading 2.
Deflection of 0.5 mm max. between supports is permissable.

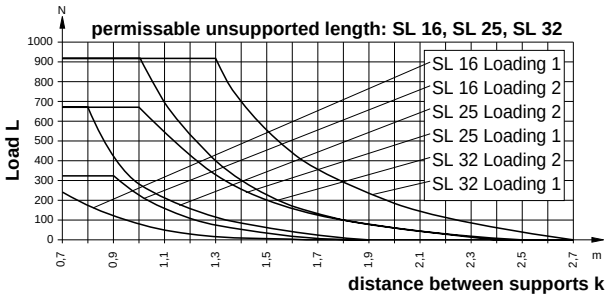

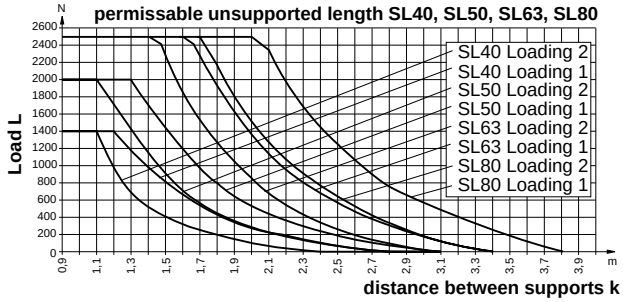

Note:
For speeds v > 0.5 m/s the distance between supports should not exceed 1 m.

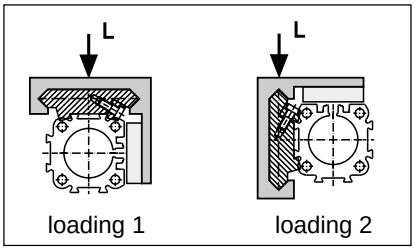

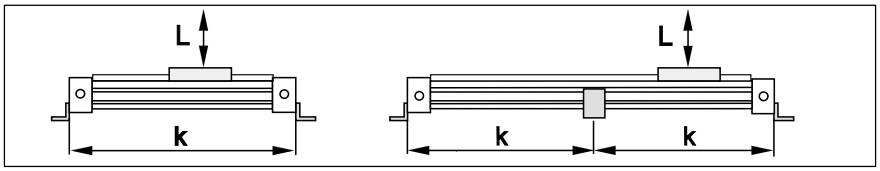

Roller Guide POWERSLIDE

OSP
ORIGA SYSTEM PLUS

Series PS 16 to 50
for Linear-drive
• Series OSP-P

Versions

– for pneumatic linear drive: Series OSP-P

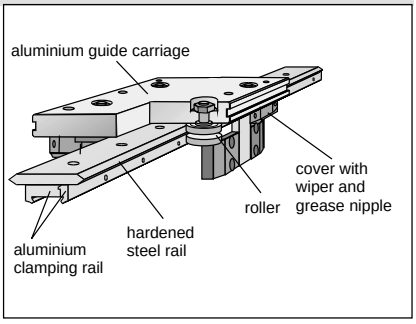

Loads, Forces and Moments

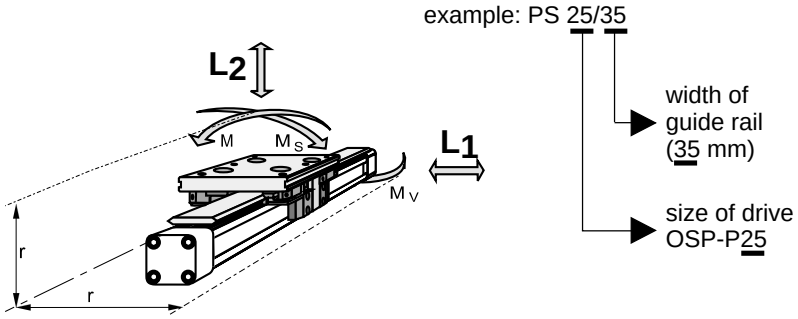

Features:

- Anodised aluminium guide carriage with vee rollers having 2 rows of ball bearings
- Hardened steel guide rail
- Several guide sizes can be used on the same drive
- Corrosion resistance version available on request
- Max. speed v = 3 m/s,
- Tough roller cover with wiper and grease nipple
- Any length of stroke up to 3500 mm, (longer strokes on request)

Technical Data

The Table shows the maximum permissable values for smooth operation, which should not be exceeded even under dynamic conditions.
For further information and technical data see data sheets for linear drives OSP-P (1.10.002E)

*** Please note:**
In the cushioning diagram, add the mass of the guide carriage to the mass to be cushioned.

Series	For linear drive	Max. moments [Nm]			Max. load [N]	Mass of linear drive with guide [kg]		Mass * of guide carriage [kg]	Order-No. Powerslide for OSP-P[1)]
		M	Ms	Mv	L_1, L_2	with 0 mm stroke	increase per 100 mm stroke		
PS 16/25	OSP-P16	45	14	45	1400	0.93	0.24	0.7	**20285**
PS 25/25	OSP-P25	63	14	63	1400	1.5	0.4	0.7	**20015**
PS 25/35	OSP-P25	70	20	70	1400	1.7	0.4	0.8	**20016**
PS 25/44	OSP-P25	175	65	175	3000	2.6	0.5	1.5	**20017**
PS 32/35	OSP-P32	70	20	70	1400	2.6	0.6	0.8	**20286**
PS 32/44	OSP-P32	175	65	175	3000	3.4	0.7	1.5	**20287**
PS 40/44	OSP-P40	175	65	175	3000	4.6	1.1	1.5	**20033**
PS 40/60	OSP-P40	250	90	250	3000	6	1.3	2.2	**20034**
PS 50/60	OSP-P50	250	90	250	3000	7.6	1.4	2.3	**20288**
PS 50/76	OSP-P50	350	140	350	4000	11.5	1.8	4.9	**20289**

[1)] corrosion resistance version available on request (max. loads and moments are 25% lower)

A1P540E00KAA00X

The right to introduce technical modifications is reserved

For **linear drives** see 1.10.002E
For **mountings** see 1.45.005E

HOERBIGER ORIGA

Dimensions

Series OSP-P

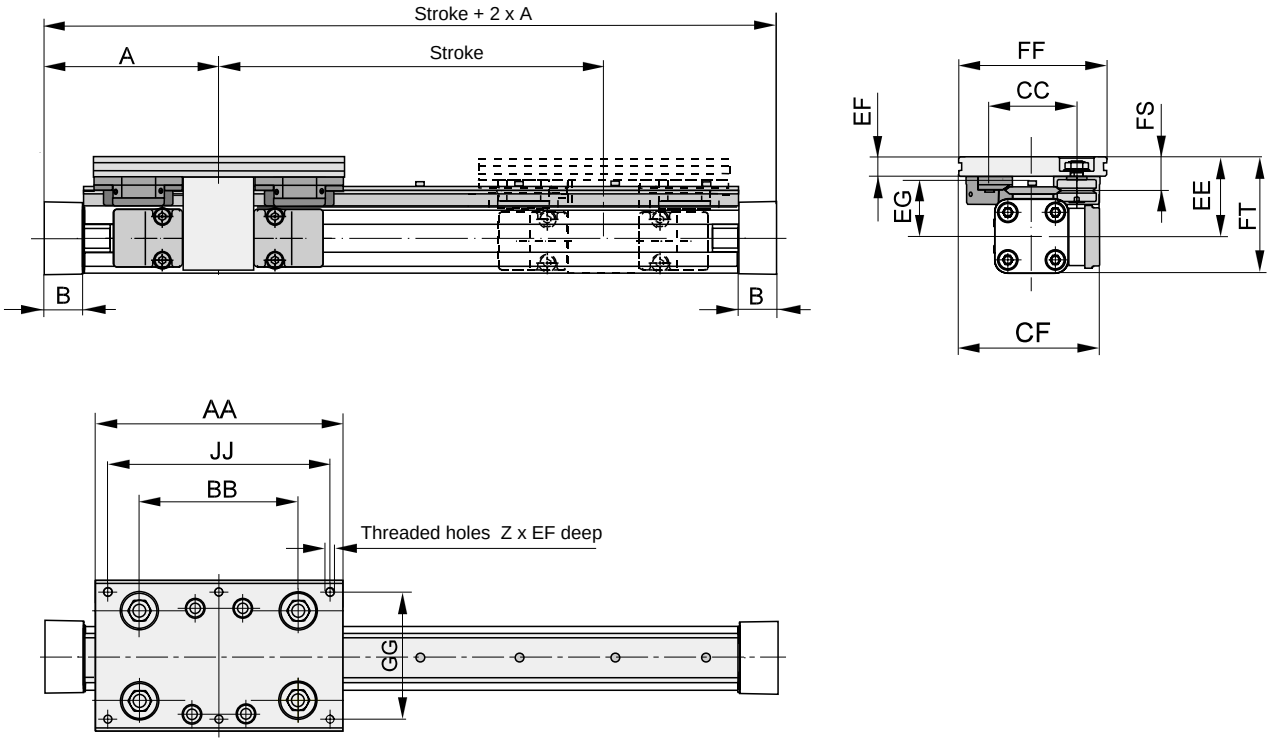

Dimension Table (mm)

Series	A	B	Z	AA	AZ	BB	CC	CF	EE	EF	EG	FF	FS	FT	GG	JJ	KG
PS16/25	65	14	4xM6	120	–	65	47	80	49	12	35	80	21	64	64	100	–
PS 25/25	100	22	6xM6	145	5	90	47	79.5	53	11	39	80	20	73.5	64	125	57
PS 25/35	100	22	6xM6	156	10	100	57	89.5	52.5	12.5	37.5	95	21.5	73	80	140	57
PS 25/44	100	22	6xM8	190	27	118	73	100	58	15	39	116	26	78.5	96	164	57
PS 32/35	125	25.5	6xM6	156	–	100	57	95.5	58.5	12.5	43.5	95	21.5	84.5	80	140	61
PS 32/44	125	25.5	6xM8	190	6	118	73	107	64	15	45	116	26	90	96	164	61
PS 40/44	150	28	6xM8	190	–	118	73	112.5	75	15	56	116	26	109.5	96	164	–
PS 40/60	150	28	6xM8	240	–	167	89	122.5	74	17	54	135	28.5	108.5	115	216	–
PS 50/60	175	33	6xM8	240	5	167	89	130.5	81	17	61	135	28.5	123.5	115	216	85
PS 50/76	175	33	6xM10	280	25	178	119	155.5	93	20	64	185	39	135.5	160	250	85

Mid-Section Support

(for versions, see accessories)

Mid section supports are required from a certain stroke length to prevent excessive deflection and vibration of the linear drive. The diagrams show the maximum permissable unsupported length in relation to loading.
A distinction must be drawn between loading 1 and loading 2.
Deflection of 0.5 mm max. between supports is permissable.

Note
For speeds v > 0.5 m/s the distance between supports should not exceed 1m.

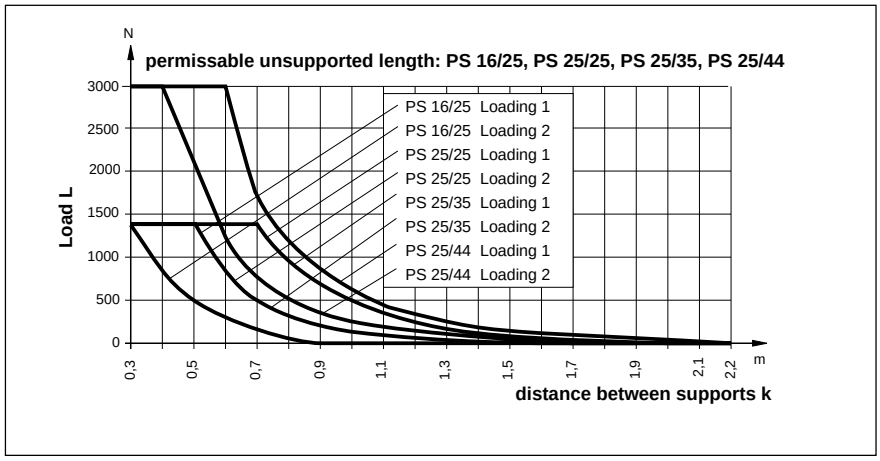

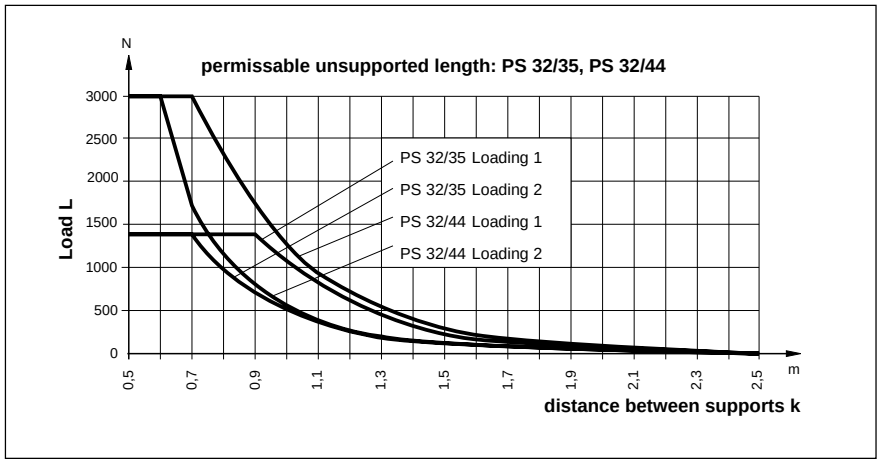

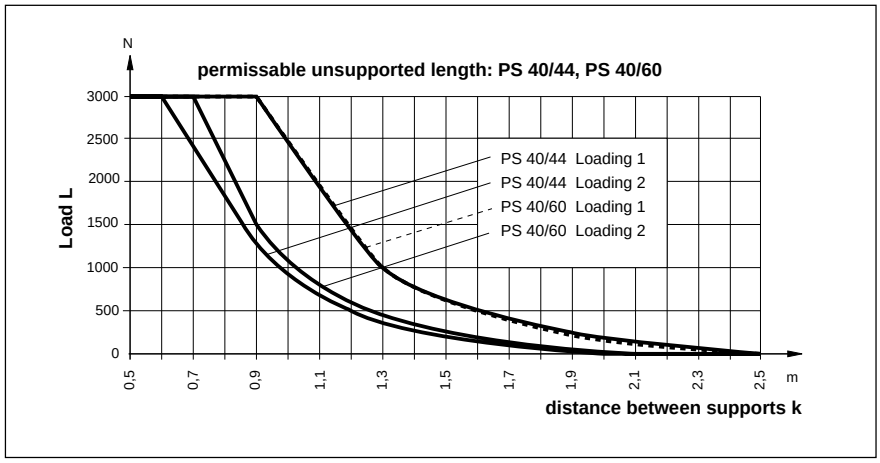

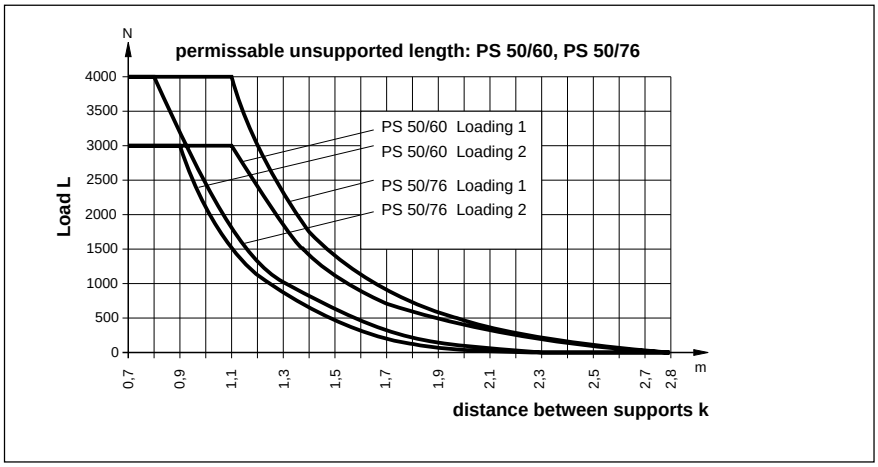

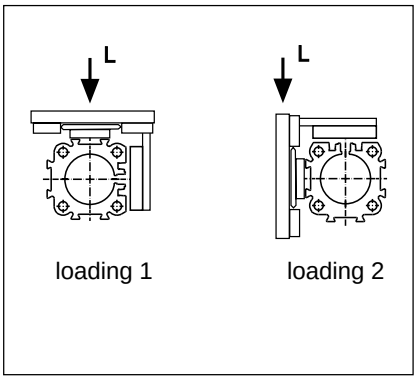

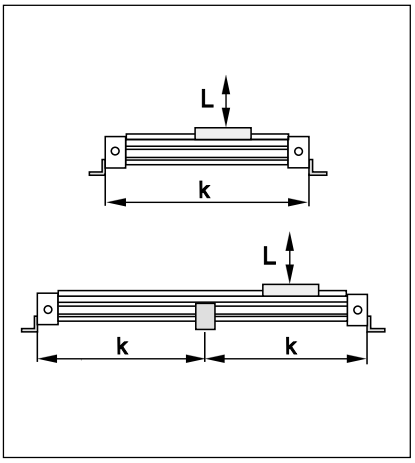

For further mounting elements and options see 1.45.001E.

Service life

Calculation of service life is achieved in two stages:

- Determination of load factor L_F from the loads to be carried
- Calculation of service life in km

1. Calculation of load factor L_F

$$L_F = \frac{M}{M_{max}} + \frac{M_S}{M_{S\,max}} + \frac{M_V}{M_{V\,max}} + \frac{L_1}{L_{1max}} + \frac{L_2}{L_{2max}}$$

with combined loads, L_F should not exceed the value 1.

Lubrication

For maximum system life, lubrication of the rollers must be maintained at all times.

Only high quality Lithium based greases should be used.

Lubrication intervals are dependant on environmental conditions (temperature, running speed, grease quality etc.) therefore the installation should be regularly inspected.

2. Calculation of service life

- **For PS 16/25, PS 25/25, PS 25/35, and PS 32/35** — **Service life [km] =** $\frac{106}{(L_F + 0.02)^3}$
- **For PS 25/44, PS 32/44, PS 40/44, PS 40/60 and PS 50/60:** — **Service life [km] =** $\frac{314}{(L_F + 0.015)^3}$
- **For PS 50/76:** — **Service life [km] =** $\frac{680}{(L_F + 0.015)^3}$

Ball bushing guide GUIDELINE

OSP
ORIGA SYSTEM PLUS

Series GDL 25 to 50
for Linear-drive
• Series OSP-P

Versions

– Versions for linear drive Series OSP-P

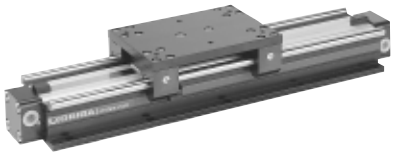

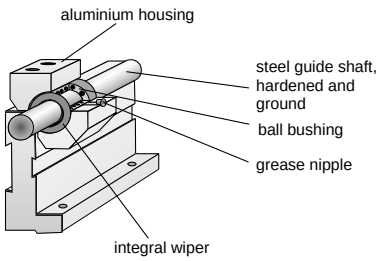

Loads, Forces and Moments

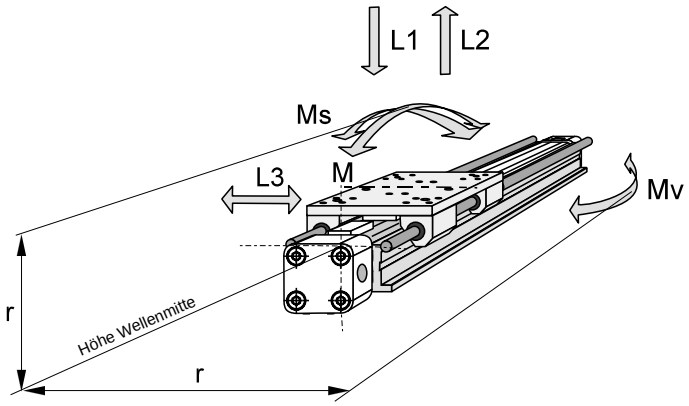

Technical Data

The Table shows the maximum permissable values for smooth operation, which should not be exceeded even under dynamic conditions.

For further information and technical data see data sheets for linear drives OSP-P (1.10.002E)

*** Please note:**
In the cushioning diagram, add the mass of the guide carriage to the mass to be cushioned.

Features

- Anodised aluminium guide rail with four ball bushings
- Hardened and ground steel guide shafts
- Stainless steel guide shafts available on request
- Max. speed v = 3 m/s
- OSP-P: smooth slow speed operation $v_{min} \geq 0.02$ m/s.
- Any length of stroke up to 6000 mm (longer strokes on request)

Series	For linear drive	Max. moments [Nm]			Max. load [N]			Mass of linear drive with guide [kg]		Mass * of guide carriage [kg]	Order No. GUIDELINE for OSP-P[1)]
		M	Ms	Mv	L_1	L_2	L_3	with 0 mm stroke	increase p. 100 mm stroke		
GDL 25	OSP-P25	115	75	90	2500	2100	1650	2.5	0.7	1.1	**20175**
GDL 32	OSP-P32	145	90	115	2500	2100	1650	3.6	0.9	1.2	**20180**
GDL 40	OSP-P40	440	330	310	8000	6250	4400	6.3	1.4	2.0	**20177**
GDL 50	OSP-P50	500	375	355	8000	6250	4400	8.6	1.6	2.2	**20183**

[1)] corrosion resistance version available on request (max. loads and moments are 30% lower)

For **linear drives** see 1.10.002E

A1P541E00KAA00X
The right to introduce technical modifications is reserved

HOERBIGER ORIGA

Dimensions

Series OSP-P

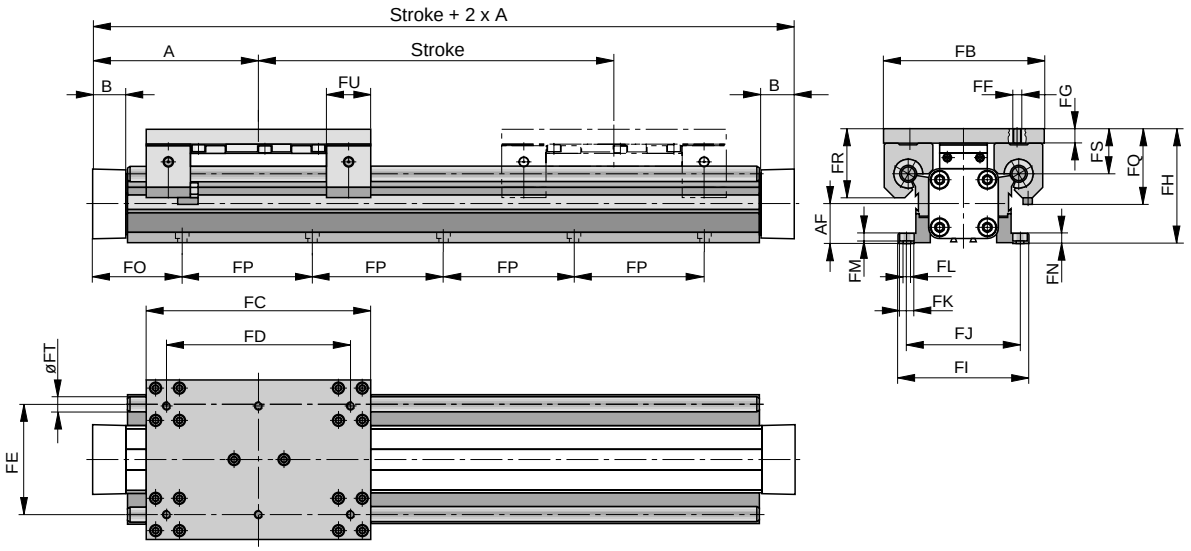

For further options see 1.45.001E.

Note:

The guideline linear guide must be mounted on a flat surface along its entire length.

Arrangement of proximity sensors:

Proximity sensors can be fitted anywhere on either side.
The magnet can be screwed on to one of the four ball bushing housings from underneath.

Proximity sensors
– see accessories 1.45.100E
Linear Drives
OSP-P see data sheet 1.10.002E

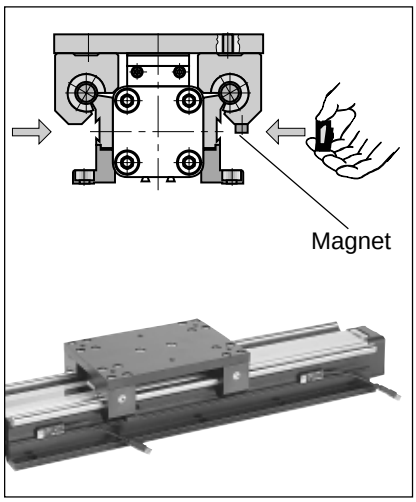

Dimension Table (mm)																						
Series	A	B	AF	FB	FC	FD	FE	FF	FG	FH	FI	FJ	øFK	øFL	FM	FN	FP	FQ	FR	FS	øFT	FU
GDL 25	100	22	22	120	145	110	70	M6	11	78	86	73	10.5	6.0	5.7	8	100	56.5	51.5	33.5	12	32
GDL 32	125	25.5	30	120	170	140	80	M6	11	86	98	85	10.5	6.0	5.7	8	100	56.5	51.5	33.5	12	32
GDL 40	150	28	38	160	180	140	110	M8	14	108	120	104	12	7.5	6.8	10	100	73	61	38	16	36
GDL 50	175	33	48	180	200	160	120	M8	14	118	134	118	12	7.5	6.8	10	100	73	61	38	16	36

FO				
OSP-P				
x	P25	P32	P40	P50
00	50.0	75.0	50.0	75.0
01	50.5	75.5	50.5	75.5
02	51.0	76.0	51.0	76.0
03	51.5	76.5	51.5	76.5
04	52.0	77.0	52.0	77.0
05	52.5	77.5	52.5	77.5
06	53.0	78.0	53.0	78.0
07	53.5	78.5	53.5	78.5
08	54.0	79.0	54.0	79.0
09	54.5	79.5	54.5	79.5
10	55.0	80.0	55.0	80.0
11	55.5	80.5	55.5	80.5
12	56.0	81.0	56.0	81.0
13	56.5	81.5	56.5	81.5
14	57.0	82.0	57.0	82.0
15	57.5	82.5	57.5	82.5
16	58.0	83.0	58.0	83.0
17	58.5	83.5	58.5	83.5
18	59.0	84.0	59.0	84.0
19	59.5	84.5	59.5	84.5
20	60.0	85.0	60.0	85.0
21	60.5	85.5	60.5	85.5
22	61.0	36.0	61.0	86.0
23	61.5	36.5	61.5	86.5
24	62.0	37.0	62.0	87.0
25	62.5	37.5	62.5	87.5
26	63.0	38.0	63.0	88.0
27	63.5	38.5	63.5	88.5
28	64.0	39.0	64.0	89.0
29	64.5	39.5	64.5	89.5
30	65.0	40.0	65.0	90.0
31	65.5	40.5	65.5	90.5
32	66.0	41.0	66.0	91.0
33	66.5	41.5	66.5	91.5
34	67.0	42.0	67.0	92.0
35	67.5	42.5	67.5	92.5
36	68.0	43.0	68.0	93.0
37	68.5	43.5	68.5	43.5
38	69.0	44.0	69.0	44.0
39	69.5	44.5	69.5	44.5
40	70.0	45.0	70.0	45.0
41	70.5	45.5	70.5	45.5
42	71.0	46.0	71.0	46.0
43	71.5	46.5	71.5	46.5
44	72.0	47.0	72.0	47.0
45	72.5	47.5	72.5	47.5
46	73.0	48.0	73.0	48.0
47	73.5	48.5	73.5	48.5
48	74.0	49.0	74.0	49.0
49	74.5	49.5	74.5	49.,5

FO				
OSP-P				
x	P25	P32	P40	P50
50	75.0	50.0	75.0	50.0
51	75.5	50.5	75.5	50.5
52	76.0	51.0	76.0	51.0
53	76.5	51.5	76.5	51.5
54	77.0	52.0	77.0	52.0
55	77.5	52.5	77.5	52.5
56	78.0	53.0	78.0	53.0
57	78.5	53.5	78.5	53.5
58	79.0	54.0	79.0	54.0
59	79.5	54.5	79.5	54.5
60	80.0	55.0	80.5	55.0
61	80.5	55.5	80.5	55.5
62	81.0	56.0	81,0	56.0
63	81.5	56.5	81.5	56.5
64	82.0	57.0	82.0	57.0
65	32.5	57.5	82.5	57.5
66	33.0	58.0	83.0	58.0
67	33.5	58.5	83.5	58.5
68	34.0	59.0	84.0	59.0
69	34.5	59.5	84.5	59.5
70	35.0	60.0	85.0	60.0
71	35.5	60.5	85.5	60.5
72	36.0	61.0	86.0	61.0
73	36.5	61.5	86.5	61.5
74	37.0	62.0	87.0	62.0
75	37.5	62.5	87.5	62.5
76	38.0	63.0	88.0	63.0
77	38.5	63.5	38.5	63.5
78	39.0	64.0	39.0	64.0
79	39.5	64.5	39.5	64.5
80	40.0	65.0	40.0	65.0
81	40.5	65.5	40.5	65.5
82	41.0	66.0	41.0	66.0
83	41.5	66.5	41.5	66.5
84	42.0	67.0	42.0	67.0
85	42.5	67.5	42.5	67.5
86	43.0	68.0	43.0	68.0
87	43.5	68.5	43.5	68.5
88	44.0	69.0	44.0	69.0
89	44.5	69.5	44.5	69.5
90	45.0	70.0	45.0	70.0
91	45.5	70.5	45.5	70.5
92	46.0	71.0	46.0	71.0
93	46.5	71.5	46.5	71.5
94	47.0	72.0	47.0	72.0
95	47.5	72.5	47.5	72.5
96	48.0	73.0	48.0	73.0
97	48.5	73.5	48.5	73.5
98	49.0	74.0	49.0	74.0
99	49.5	74.5	49.5	74.5

Note:

The dimension FO is derived from the last two digits of the stroke:

Example:

Stroke 15 ***25*** mm

X

For a cylinder OSP-P25 the adjacent table indicates that for x=25mm:
FO = 62.5 mm

System Life

The calculation for expected service life is achieved in three steps:

- Determination of the load factor L_F, inserting actual values into the adjacent equation
- Determination of guidance constant K_F
- Calculation of the service life in km

Lubrication

For maximum system life, lubrication of the ball bushings must be maintained at all times.

Only high quality Lithium based greases should be used.

Lubrication intervals are dependant on environmental conditions (temperature, running speed, grease quality etc.) therefore the installation should be regularly inspected.

1. Calculation of load factor L_F

$$L_F = \frac{M}{M_{max}} + \frac{M_S}{M_{S\,max}} + \frac{M_V}{M_{V\,max}} + \frac{L_1}{L_{1max}} + \frac{L_2}{L_{2max}} + \frac{L_3}{L_{3max}}$$

with combined loads, L_F should not exceed the value 1.

2. Guidance constant K_F

Installation	guidance constant K_F	
	GDL 25, GDL 32	GDL 40, GDL 50
Horizontal	200	210
Sideways	250	320
Vertical	90	120

3. Service life calculation

Approximate service life is calculated using the following equation:

$$\text{Service life [km]} = \frac{K_F}{L_F^{\,3}}$$

Aluminium Roller Guide PROLINE

OSP
ORIGA SYSTEM PLUS

Series PL 16 to 50
for Linear-drive
• Series OSP-P

Versions

Standard versions

– for pneumatic linear drive: Series OSP-P

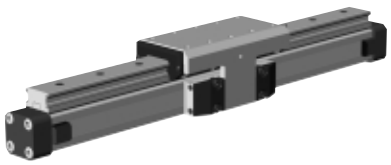

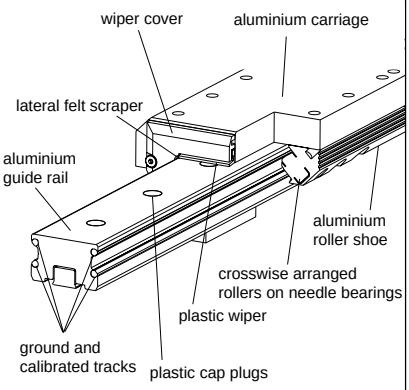

Option – Integrated Brake

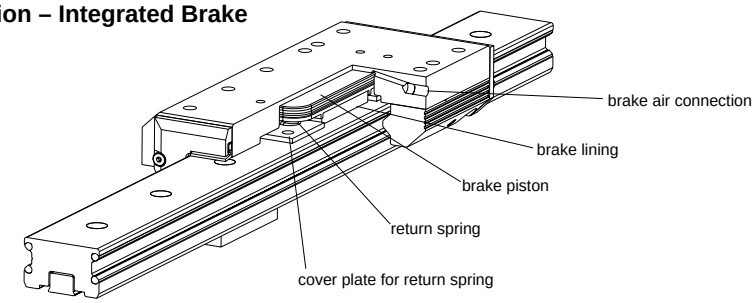

Features:

- High precision
- High velocities (10 m/s)
- Smooth operation - low noise
- Integated wiper system
- Long life lubrication
- Compact dimensions - compatible to Slideline plain bearing guide
- Stainless steel version available on request
- Any length of stroke up to 3750 mm

Integrated Brake (optional) for Series OSP-P25 to OSP-P50:

- Actuated by pressurisation
- Release by depressurisation and spring actuation

Loads, Forces and Moments

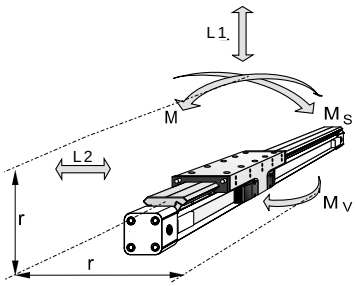

Technical Data

The table shows the maximal permissible loads. If multiple moments and forces act upon the cylinder simultaneously, the following equation applies:

$$\frac{M}{M_{max}} + \frac{M_S}{M_{S\,max}} + \frac{M_V}{M_{V\,max}} + \frac{L_1}{L_{1max}} + \frac{L_2}{L_{2max}} \leq 1$$

The sum of the loads should not exceed >1

The table shows the maximum permissible values for light, shock-free operation, which must not be exceeded even under dynamic conditions.

*** Please note:**
The mass of the carriage has to be added to the total moving mass when using the cushioning diagram.

Series	For linear drive	Max. moments [Nm]			Max. loads [N]	Maximum braking force at 6 bar [N] [1]	Mass of linear drive with guide [kg]		Mass * guide carriage [kg]	Order No. PROLINE [2] for OSP-P	
		M	Ms	Mv	L1, L2		with 0 mm stroke	increase per 100 mm stroke		without brake	with brake
PL 16	OSP-P-16	18	11	18	720	–	0.55	0.19	0.24	**20855**	**-**
PL 25	OSP-P-25	55	23	55	1210	on request	1.65	0.40	0.75	**20856**	**20860**
PL 32	OSP-P-32	91	36	91	1460	on request	3.24	0.62	1.18	**20857**	**20861**
PL 40	OSP-P-40	198	72	198	2600	on request	4.35	0.70	1.70	**20858**	**20862**
PL 50	OSP-P-50	313	139	313	3890	on request	7.03	0.95	2.50	**20859**	**20863**

[1] Only for version with brake:
Braking surface dry – oiled surface reduces the effective braking force.
[2] Stainless steel version on request

For **linear drives** see 1.10.002E
For **mountings** see 1.45.005E

A1P539E00KAA00X
The right to introduce technical modifications is reserved

Dimension Table (mm) Series OSP-P PL16, PL25, PL32, PL40, PL50

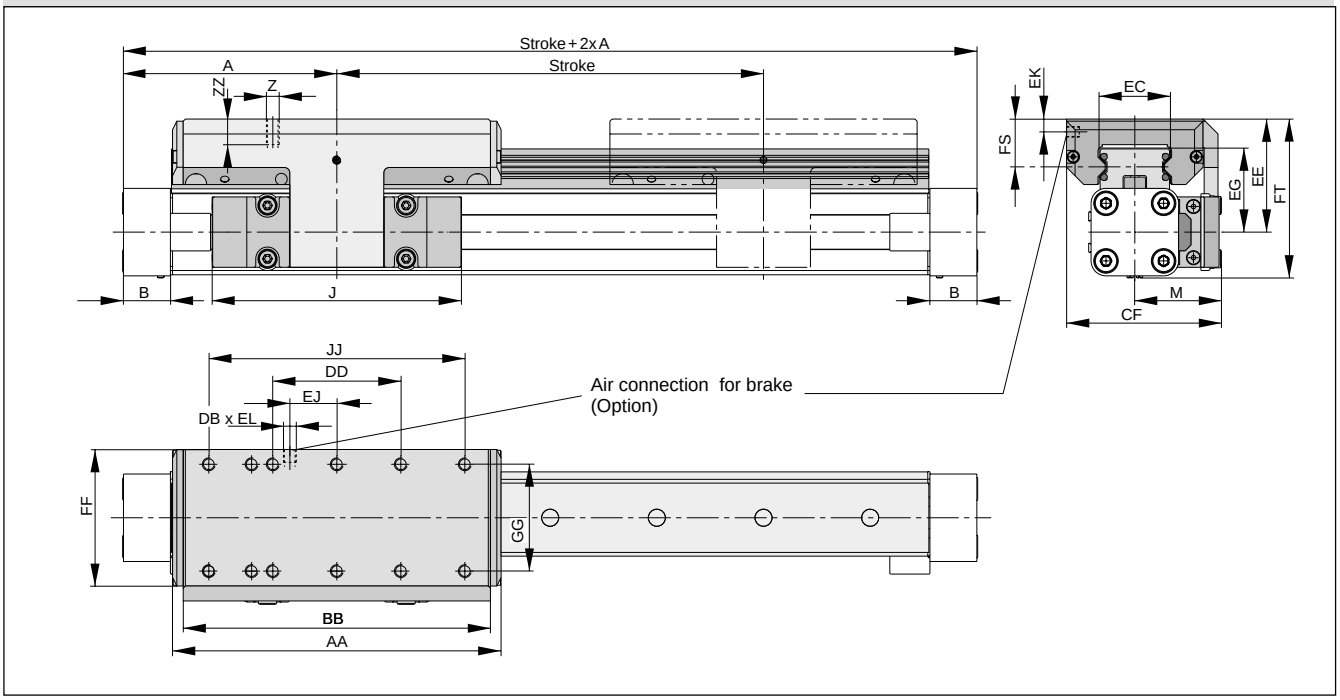

Dimension Table (mm) Series OSP-P PL16, PL25, PL32, PL40, PL50

Series	A	B	J	M	Z	AA	BB	DB	DD	CF	EC	EE	EG	EJ	EK	EL	FF	FS	FT	GG	JJ	ZZ
PL16	65	14	69	31	M4	98	88	-	30	55	23	40	30	-	-	-	48	17	55	36	70	8
PL25	100	22	117	40.5	M6	154	144	M5	60	72.5	32.5	53	39	22	6	6	64	23	73.5	50	120	12
PL32	125	25.5	152	49	M6	197	187	M5	80	91	42	62	48	32	6	6	84	25	88	64	160	12
PL40	150	28	152	55	M6	232	222	M5	100	102	47	64	50.5	58	6	6	94	23.5	98.5	78	200	12
PL50	175	33	200	62	M6	276	266	M5	120	117	63	75	57	81	6	6	110	29	118.5	90	240	16

Mid-Section Support

(For versions, see 1.45.005E)

Mid-section supports are required from a certain stroke length to prevent excessive deflection and vibration of the linear drive. The diagrams show the maximum permissible unsupported length in relation to loading. A distinction must be drawn between loading 1 and loading 2. Deflection of 0.5 mm max. between supports is permissible.

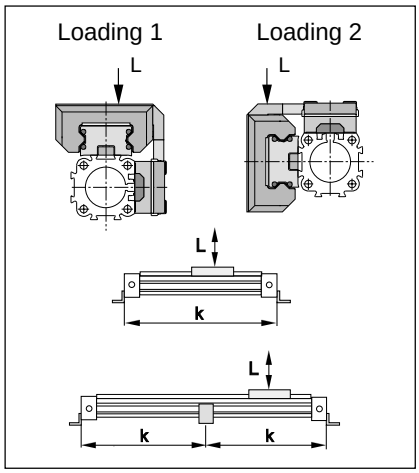

Note:

For speeds v > 0.5 m/s the distance between supports should not exceed 1 m.

Permissible Unsupported Length PL16, PL25, PL32, PL40 und PL50

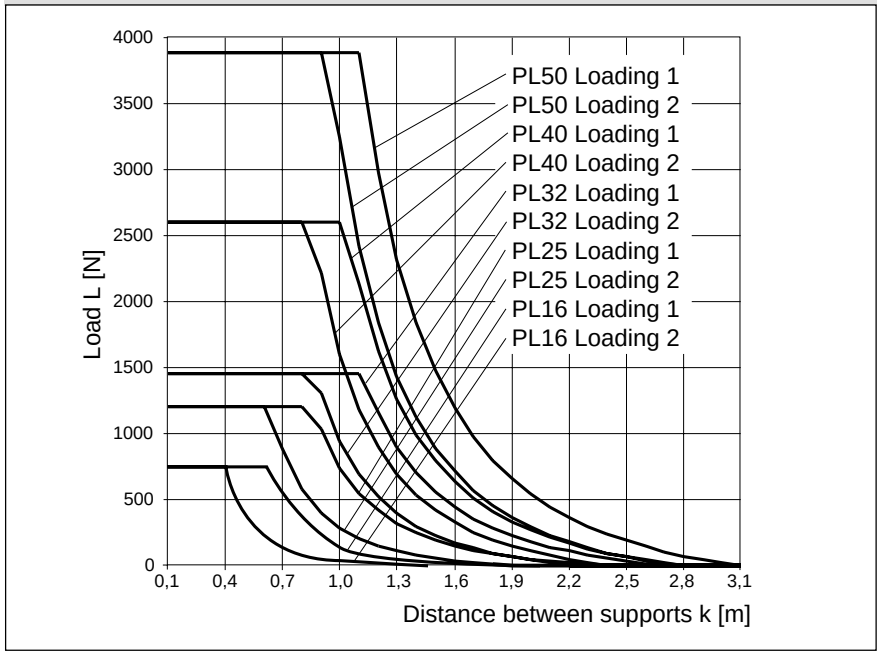

Active and Passive Brakes
Series OSP-P

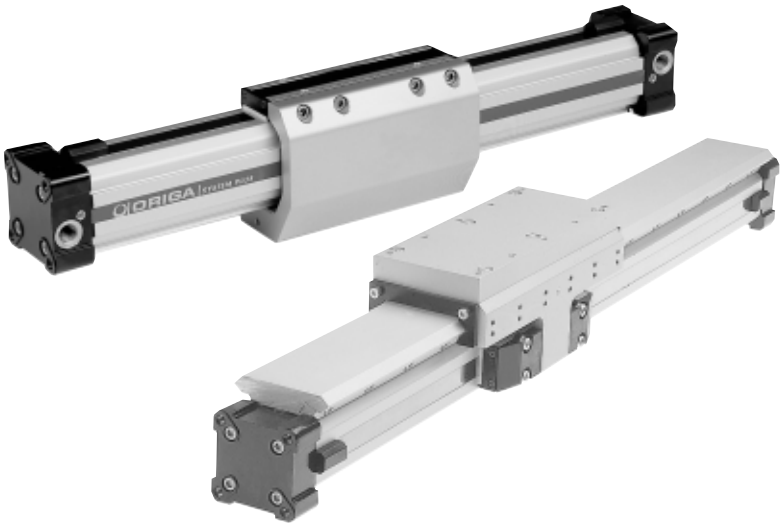

Contents

Description	Data Sheet No.	Page
Overview	1.42.001E	37-38
Plain bearing SLIDELINE with Active brake	1.40.002E	25-26
Aluminium roller guide PROLINE with Active brake	1.40.005E	35-36
Plain bearing SLIDELINE with Passive brake Multibrake	1.42.003E	43-46
Aluminium roller guide PROLINE with Passive brake Multibrake	1.42.004E	47-49

HOERBIGER-ORIGA GMBH · Südliche Römerstraße 15 · D-86972 Altenstadt · Tel. +49 +8861 221-0 · Fax +49 +8861 221-1305 · E-mail pneu@hoerbiger.de
HOERBIGER-ORIGA GMBH · Industriestr. 8 · D-70794 Filderstadt · Tel. +49 +7158 1703-0 · Fax +49 +7158 64870 · E-mail dmarket@hoerbiger-origa.com
HOERBIGER-ORIGA LTD. · Tewkesbury Industrial Estate · Tewkesbury GL 20 8 ND GB · Tel. +44 1684 85 00 00 · Fax +44 1684 85 05 55
E-mail sales@hoerbiger-origa.com
HOERBIGER-ORIGA Pneumatik GmbH · Dr. Alexander-Schärf-Straße 12 · A-2700 Wiener Neustadt · Tel. +43 +2622 26071-0 · Fax +43 +2622 26071-5
E-mail amarket@hoerbiger-origa.com
HOERBIGER-ORIGA AB · Kungsgatan 10, Box 67 · SE-73622 Kungsör · Tel. +46 227 411 00 · Fax +46 227 411 29 · E-mail semarket@hoerbiger-origa.com
Internet http://www.hoerbiger-origa.com

OSP
ORIGA
SYSTEM
PLUS

Active Brakes and Passive Brakes

Versions:

- ACTIVE Brake
- Plain bearing guide with integrated ACTIVE Brake
- Aluminium roller guide with integrated ACTIVE Brake
- Plain bearing guide with PASSIVE Brake
- Aluminium roller guide with PASSIVE Brake

Active Brake
for pneumatic linear drive
Series OSP-P
Piston diameters 25 - 80 mm.

See data sheet 1.42.002E

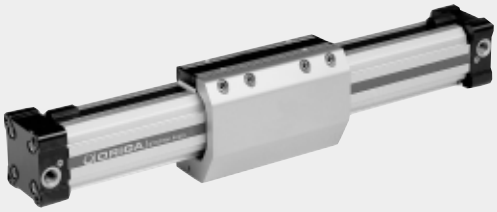

Slideline with Active Brake
Plain bearing guide SLIDELINE - SL
with integrated ACTIVE Brake
Piston diameters 25 - 50 mm.

See data sheet 1.40.002E

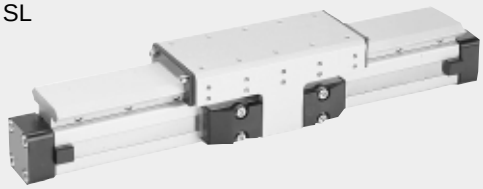

Proline with Active Brake
Aluminium roller guide
PROLINE - PL with
integrated ACTIVE Brake
Piston diameters 25 - 50 mm.

See data sheet 1.40.005E

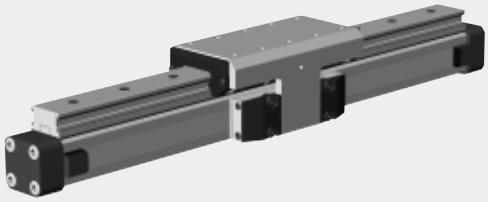

Multibrake with Slideline
MULTI BRAKE – PASSIVE Brake
with plainbearing guide
SLIDELINE - SL
Piston diameter 25 - 80 mm.

See data sheet 1.42.003E

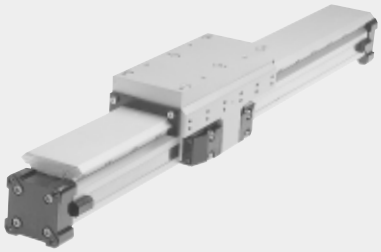

Multibrake with Proline
MULTI BRAKE – PASSIVE Brake
with aluminium roller guide
PROLINE - PL
Piston diameters 25 - 50 mm.

See data sheets 1.42.004E

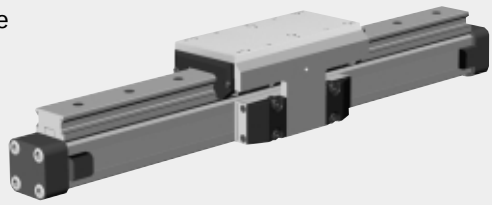

Active Brake

OSP
ORIGA
SYSTEM
PLUS

Series AB 25 to 80
for linear drive
• Series OSP-P

Features:

- Actuated by pressurisation
- Released by spring actuation
- Completely stainless version
- Holds position, even under changing load conditions

For further technical data, please refer to the data sheets for linear drivesOSP-P (1.10.002E)

Function

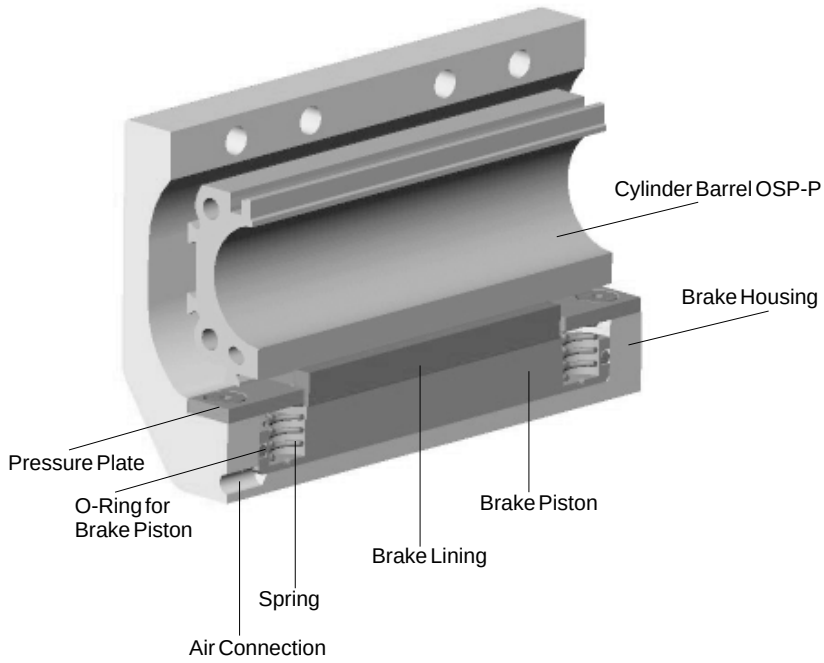

Forces and Weights

Series	For linear drive	Max. braking force [N] (1	Brake pad way [mm]	Mass [kg] Linear drive with brake 0 mm stroke	increase per 100mm stroke	brake*	Order No. Active brake
AB 25	OSP-P25	350	2.5	1.0	0.197	0.35	**20806**
AB 32	OSP-P32	590	2.5	2.02	0.354	0.58	**20807**
AB 40	OSP-P40	900	2.5	2.83	0.415	0.88	**20808**
AB 50	OSP-P50	1400	2.5	5.03	0.566	1.50	**20809**
AB 63	OSP-P63	2170	3.0	9.45	0.925	3.04	**20810**
AB 80	OSP-P80	4000	3.0	18.28	1.262	5.82	**20811**

(1 – at 6 bar
both chambers pressurised
with 6 bar
Braking surface dry
– oil on the braking surface will
reduce the braking force

*** Please Note:**
The mass of the brake has to be added to the total moving mass when using the cushioning diagram.

For additional information on loads, forces and moment, please refer to data sheet no. 1.10.002E

A1P616E00KAA00X
The right to introduce technical modifications is reserved

HOERBIGER ORIGA

Series OSP-P25 and P32 with Active Brake AB

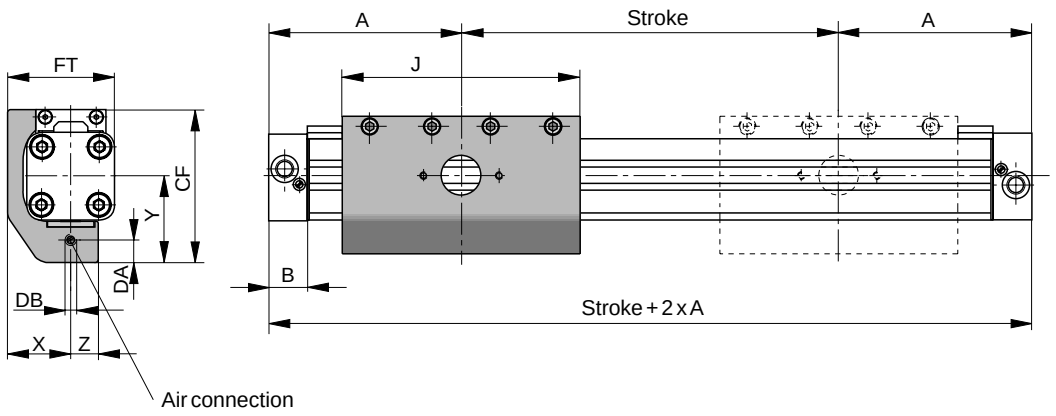

Series OSP-P40, P50, P63, P80 with Active Brake AB

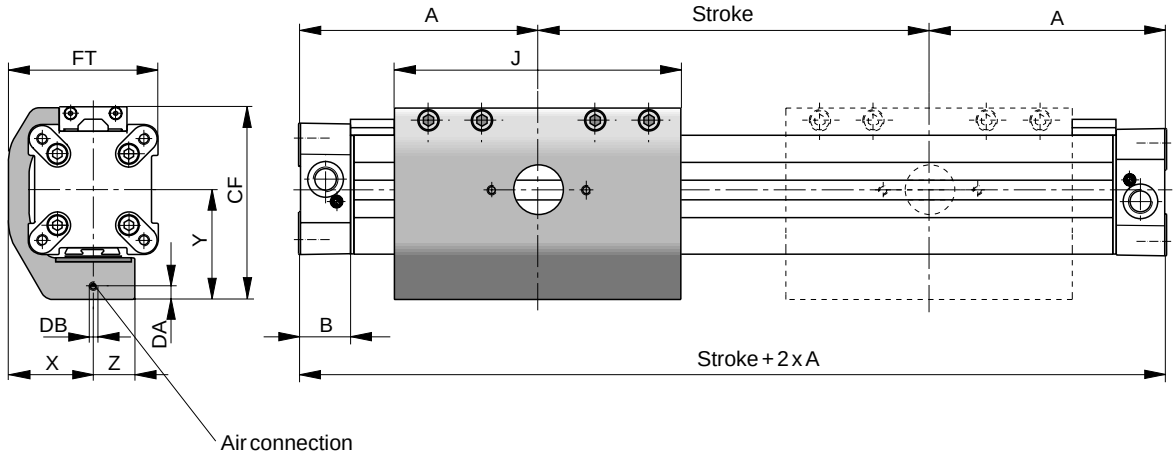

Dimension Table (mm)

Series	A	B	J	X	Y	Z	CF	DA	DB	FT
AB 25	100	22	117	29.5	43	13	74	4	M5	50
AB 32	125	25.5	151.4	36	50	15	88	4	M5	62
AB 40	150	28	151.4	45	58	22	102	7	M5	79.5
AB 50	175	33	200	54	69.5	23	118.5	7.5	M5	97.5
AB 63	215	38	256	67	88	28	151	9	G1/8	120
AB 80	260	47	348	83	105	32	185	10	G1/8	149

Series OSP – P25 and P32 with Active Brake AB: Type A3

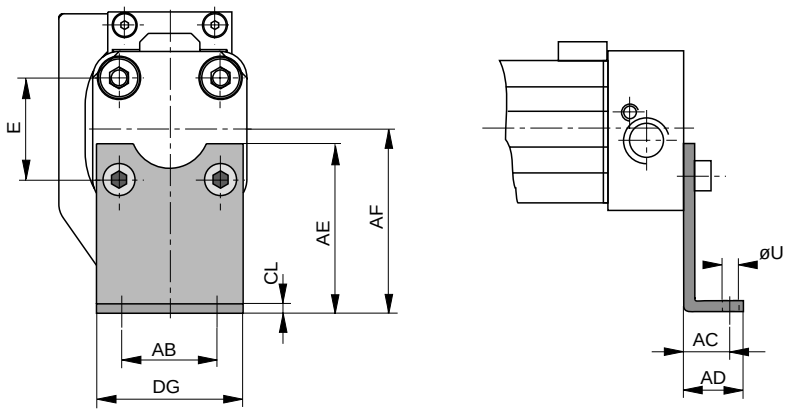

End Cap Mountings

On the end-face of each cylinder end cap there are four threaded holes for mounting the cylinder. The hole layout is square, so that the mounting can be fitted to the bottom, top or either side.

Material: Series OSP-P25, P32: Galvanised steel

The mountings are supplied in pairs.

Series OSP – P40 , P50, P63, P80 with Active Brake AB: Type C3

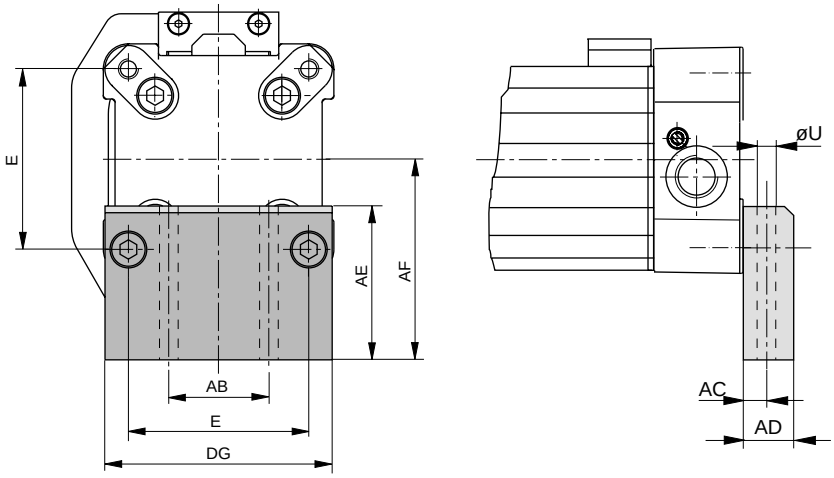

Material: Series OSP-P40,P50, P63, P80: Anodised aluminium

The mountings are supplied in pairs.

Stainless steel version on request.

Dimension Table (mm)

Series	E	øU	AB	AC	AD	AE	AF	CL	DG	Order No. Type A3	Order No. Type C3
AB 25	27	5.8	27	16	22	45	49	2.5	39	**2060**	**–**
AB 32	36	6.6	36	18	26	42	52	3	50	**3060**	**–**
AB 40	54	9	30	12.5	24	46	60	–	68	**–**	**20339**
AB 50	70	9	40	12.5	24	54	72	–	86	**–**	**20350**
AB 63	78	11	48	15	30	76	93	–	104	**–**	**20821**
AB 80	96	14	60	17.5	35	88	110	–	130	**–**	**20822**

Mid Section Support

Mid-section supports are required from a certain stroke length to prevent excessive deflection and vibration of the linear drive.

The diagrams show the maximum permissible unsupported length in relation to loading. Deflection of 0.5mm max. between supports is permissible.
The mid section supports are attached to the dovetail rails, and can take axial loads.

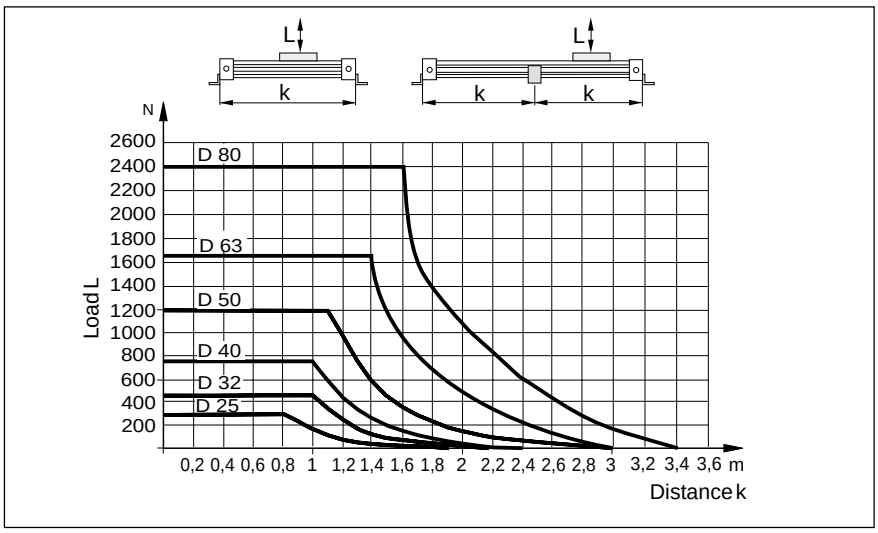

Mid Section Supports

Note to Type E3:

Mid section supports can only be mounted opposite of the brake housing.

Stainless steel version available on request.

Series OSP-P25 to P80 with Active Brake AB: Type E3
(Mounting from above / below with through-bolt)

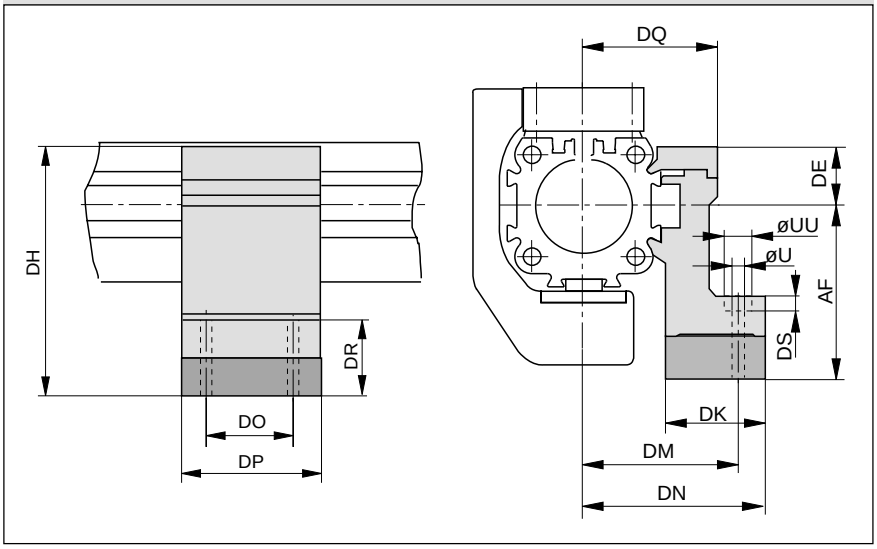

Dimension Table (mm)

Series	U	UU	AF	DE	DH	DK	DM	DN	DO	DP	DQ	DR	DS	Order No. Type E3
AB 25	5.5	10	49	16	65	26	40	47.5	36	50	34.5	35	5.7	**20353**
AB 32	5.5	10	52	16	68	27	46	54.5	36	50	40.5	32	5.7	**20356**
AB 40	7	–	60	23	83	34	53	60	45	60	45	32	–	**20359**
AB 50	7	–	72	23	95	34	59	67	45	60	52	31	–	**20362**
AB 63	9	–	93	34	127	44	73	83	45	65	63	48	–	**20453**
AB 80	11	–	110	39.5	149.5	63	97	112	55	80	81	53	–	**20819**

Accessories for linear drives with Active Brakes – please order separately

Description	For details information, see data sheet no.
Clevis mounting	**1.45.002E**
Adaptor profile	**1.45.007E**
T-Nut profile	**1.45.008E**
Adaptor profile	**1.45.009E**
Sensors (can **only** be mounted opposite of the brake housing)	**1.45.100E**
Displacement measuring system SFI	**1.50.002E**

Multi-Brake Passive Brake

with plain bearing guide Slideline SL

OSP
ORIGA SYSTEM PLUS

Series MB-SL 25 to 80
for Linear-drive
• Series OSP-P

Versions

for pneumatic linear drive:
Series OSP-P

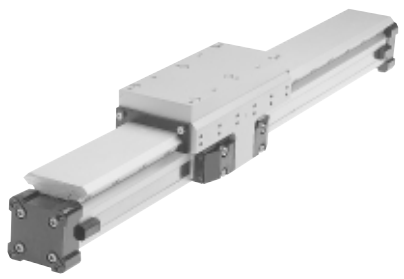

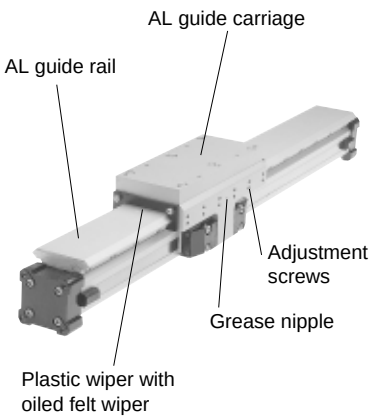

Function

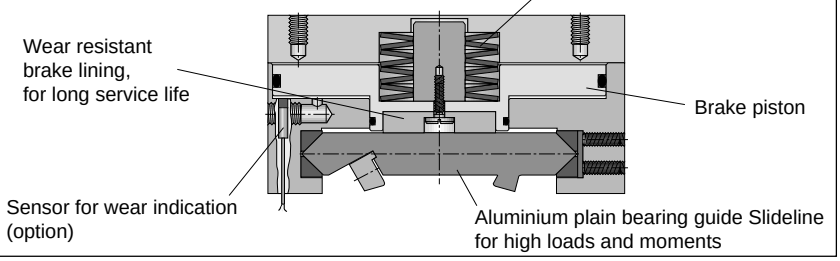

Loads, Forces and Moments

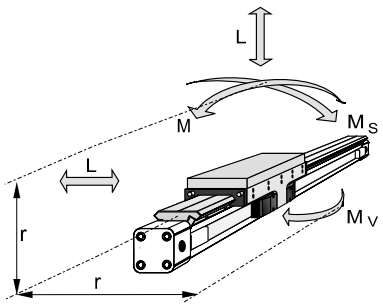

Technical Data:

The table shows the maximum values for light, shock-free operation, which must not be exceeded even in dynamic operation.

Load and moment data are based on speeds v < 0.2 m/s.

Operating pressure 4,5 - 8 bar
A pressure of 4,5 bar is required to release the brake.

For further technical information, please refer to the data sheets for linear drives OSP-P (1.10.002E)

Features:

- Brake operated by spring actuation
- Brake release by pressurisation
- Corrosion resistant as standard
- Optional sensor to indicate brake lining wear
- Anodised aluminium rail, with prism shaped slide elements
- Adjustable plastic slide elements
- Composite sealing system with plastic and felt wiper elements to remove dirt and lubricate the slideway
- Replenishable guide lubrication by integrated grease nipples
- Blocking function in case of pressure loss
- Intermediate stops possible

Function:

The Multi-Brake is a passive device. When the air pressure is removed the brake is actuated and movement of the cylinder is blocked. The brake is released by pressurisation.
The high friction, wear resistant brake linings allow the Multi-Brake to be used as a dynamic brake to stop cylinder movement in the shortest possible time. The powerful springs also allow the Multi-Brake to be used effectively in positioning applications.

Series	For linear drive	Max. moments [Nm] M	Ms	Mv	Max. loads [N] L	Max. brake force [N] 1)	Mass of linear drive with guide [kg] with 0 mm stroke	increase per 100 mm str.	Mass* guide carriage [kg]	Order No. – MB-SL no sensor	with sensor for wear indication
MB-SL 25	OSP-P25	34	14	34	675	470	2.04	0.39	1.10	**20796**	**20801**
MB-SL 32	OSP-P32	60	29	60	925	790	3.82	0.65	1.79	**20797**	**20802**
MB-SL 40	OSP-P40	110	50	110	1500	1200	5.16	0.78	2.34	**20798**	**20803**
MB-SL 50	OSP-P50	180	77	180	2000	1870	8.29	0.97	3.63	**20799**	**20804**
MB-SL 63	OSP-P63	260	120	260	2500	2900	13.31	1.47	4.97	**20800**	**20805**
MB-SL 80	OSP-P80	260	120	260	2500	2900	17.36	1.81	4.97	**20846**	**20847**

1) Braking surface dry – oil on the braking surface will reduce the braking force
* **Please note:**
in the cushioning diagram, the mass of the guide carriage has to be added to the total moving mass.

For **linear drives** see 1.10.002E
For **mountings** see 1.45.005E

HOERBIGER ORIGA

A1P616E00KAA00X
The right to introduce technical modifications is reserved

Series OSP-P with Passive Brake MB

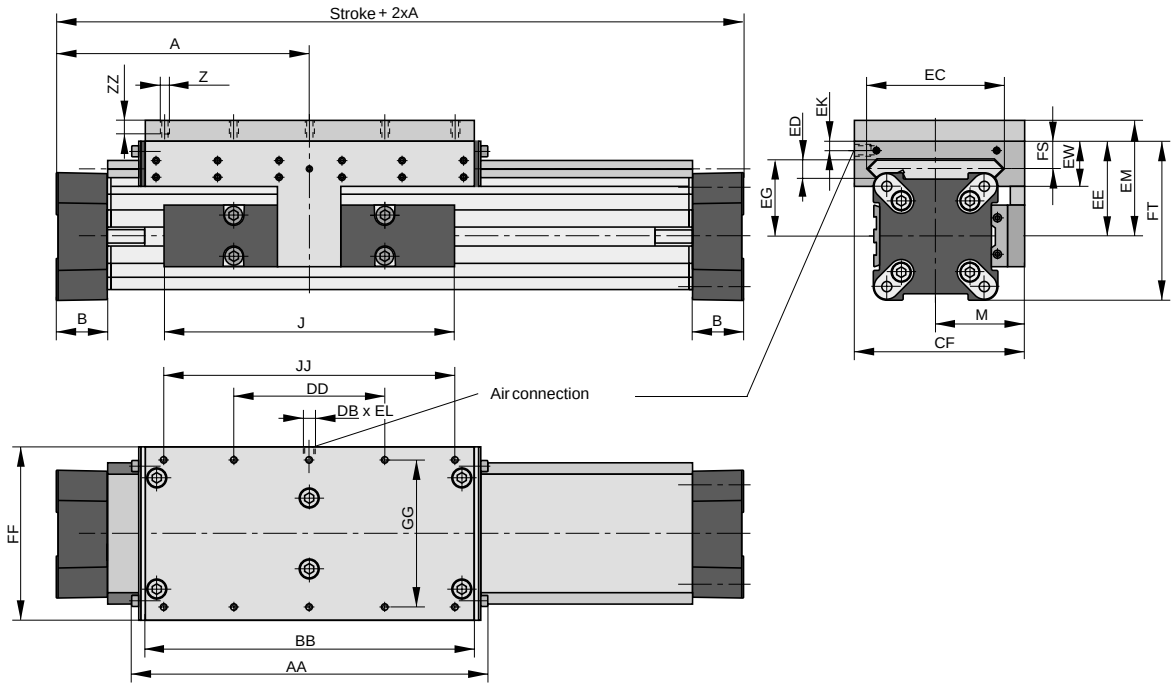

Dimension Table (mm)

Series	A	B	J	M	Z	AA	BB	DB	DD	CF	EC	ED	EE	EG	EK	EL	EM	EW	FF	FT	FS	GG	JJ	ZZ
MB-SL 25	100	22	117	40,5	M6	162	142	M5	60	72.5	47	12	53	39	9	5	73	30	64	73.5	20	50	120	12
MB-SL 32	125	25.5	152	49	M6	205	185	G1/8	80	91	67	14	62	48	7	10	82	33	84	88	21	64	160	12
MB-SL 40	150	28	152	55	M6	240	220	G1/8	100	102	77	14	64	50	6.5	10	84	34	94	98.5	21.5	78	200	12
MB-SL 50	175	33	200	62	M6	284	264	G1/8	120	117	94	14	75	56	10	12	95	39	110	118.5	26	90	240	12
MB-SL 63	215	38	256	79	M8	312	292	G1/8	130	152	116	18	86	66	11	12	106	46	152	139	29	120	260	13
MB-SL 80	260	47	348	96	M8	312	292	G1/8	130	169	116	18	99	79	11	12	119	46	152	165	29	120	260	13

Loading

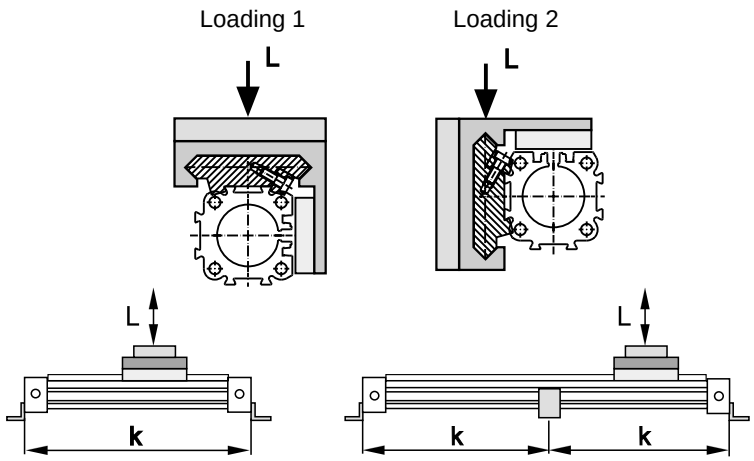

Mid Section Support

(for versions see 1.45.005E)

Mid section supports are required from a certain stroke length to prevent excessive deflection and vibration of the linear drive. The diagrams show the maximum permissable unsupported length in relation to loading. A distinction must be drawn between loading 1 and loading 2. Deflection of 0.5 mm max. between supports is permissable.

Note:

For speeds v > 0.5 m/s the distance between supports should not exceed 1 m.

Permissible Unsupported Length MB-SL25, MB-SL32

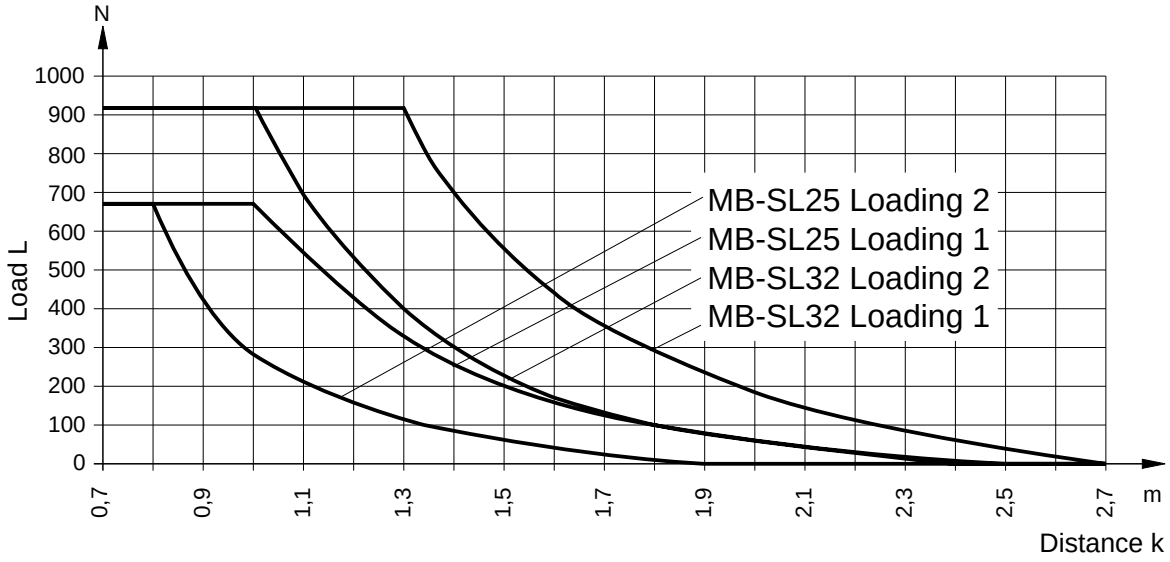

Permissible Unsupported Length MB-SL40, MB-SL50, MB-SL63 and MB-SL80

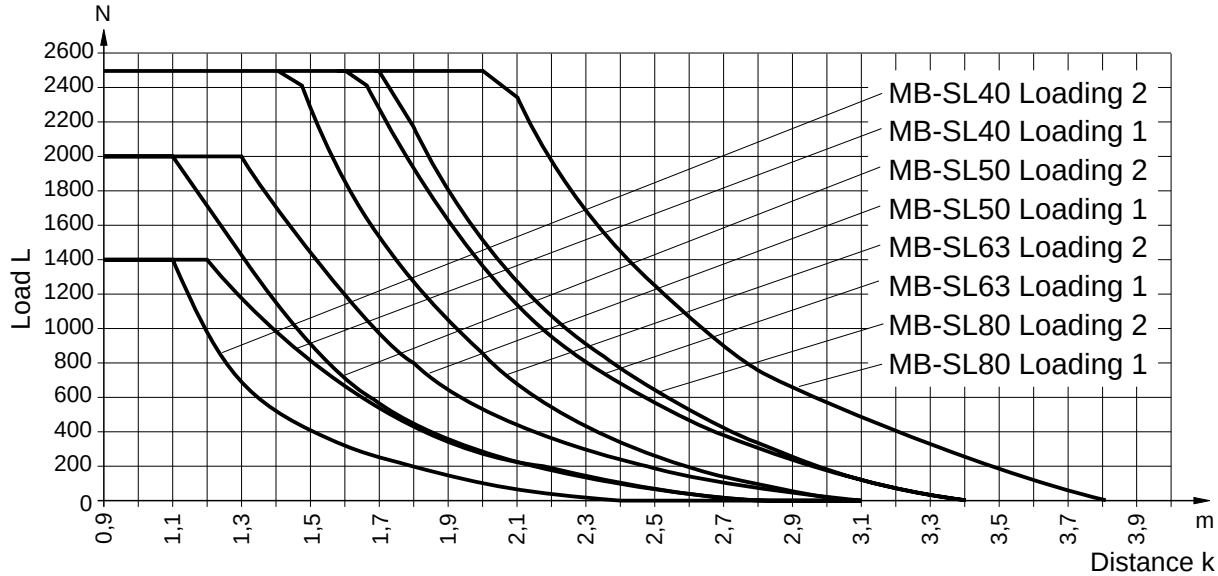

Application Example - Vertical Application

Control of a cylinder with
3/2 way valves. Basic position – **exhausted**

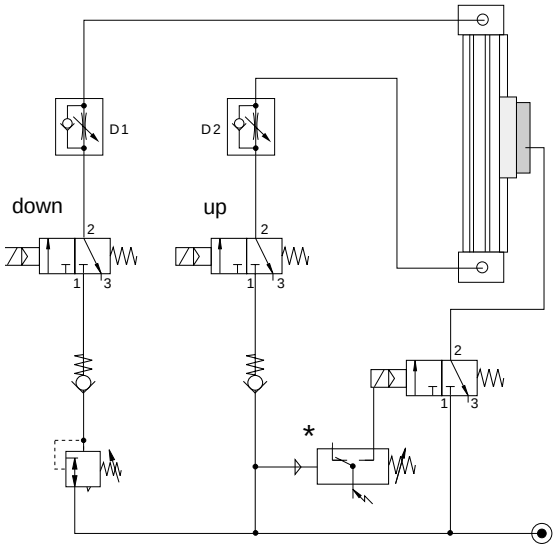

Control of a cylinder with
3/2 way valves. Basic position – **pressurised**

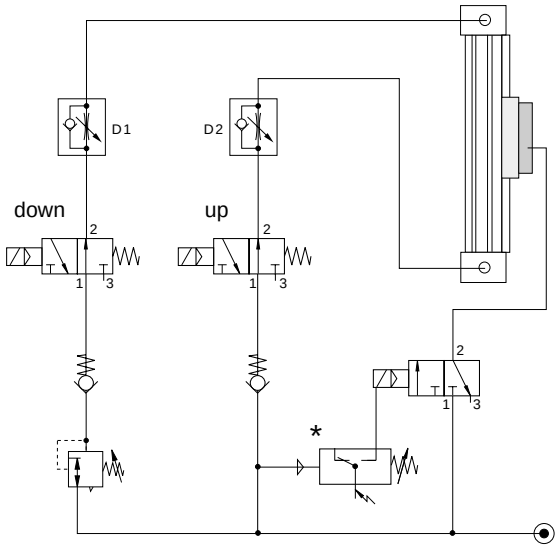

Control Examples

Under normal operating circumstances the pressure switch is closed and the air flows through the 3/2 way solenoid valves from port 1 to 2, thus lifting the brake from the rail (operating condition).
The brake is pressu-rised by means of a 3/2 way valve in combination with a pressure switch. When there is a pressure loss, the brake is actuated by the pressure switch.
When the air pressure is restored to both cylinder chambers, the brake is lifted and the linear drive can be moved again.

The speed regulating valves D1 and D2 control the speed of the linear drive, and have no influence on the brake. The two non-return valves give the system a higher stability.

The pressure regulating valve is used to compensate for the downward force in this vertical application.

Please note:
Before the brake is lifted, make sure that both air chambers of the linear drive are pressurised. Small diameter tubing, fittings and valves with a nominal diameter, and tubing that is too long all change the reaction time of the brake!

***Tip:**
The pressure switch actuates the brake when the pressure drops below the set value.

For accessories, such as tubing and fittings, please refer to our separate catalogue.

Required Components

Way Valves	
Port size	Data Sheet
M5	3.10.002E
G1/8	3.42.005E
G1/4	3.52.006E
G1/2	3.53.005E
Pressure Regulating Valve	
G1/8 - G3/8	5.12.006E
P/E-Converter see prospect A3 P142E in pneumatic catalogue chapter 6	
Non-Return Valves	
G1/8, G1/4	4.10.001E
G3/8	4.11.001E
Screw-in Speed Regulating Valves	
M5 - G1/4	4.45.002E

Multi-Brake Passive Brake

with Aluminium Roller Guide Proline PL

OSP
ORIGA SYSTEM PLUS

Series MB-PL 25 to 50
for Linear-drive
· Series OSP-P

Versions

for pneumatic linear drive:
Series OSP-P

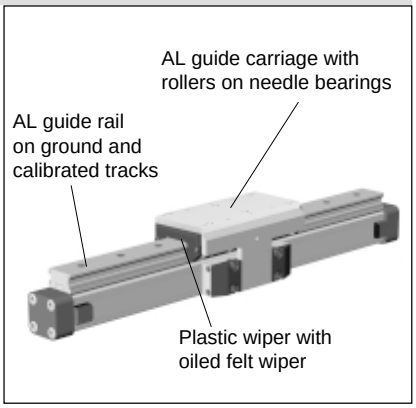

Function

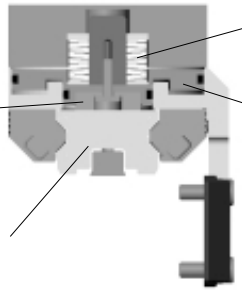

Loads, Forces and Moments

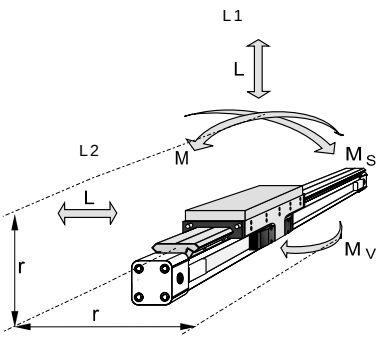

Technical Data

The table shows the maximal permissible loads. If multiple moments and forces act upon the cylinder simultaneously, the following equasion applies:

$$\frac{M}{M_{max}} + \frac{M_S}{M_{S\,max}} + \frac{M_V}{M_{V\,max}} + \frac{L_1}{L_{1max}} + \frac{L_2}{L_{2max}} \leq 1$$

The sum of the loads should not exceed >1

The table shows the maximum permissible values for light, shock-free operation, which must not be exceeded even under dynamic conditions.

Operating Pressure 4.5 - 8 bar.
A pressure of min. 4.5 bar release the brake.

Features:

- Brake operated by spring actuation
- Brake release by pressurisation
- Corrosion resistant as standard
- Optional sensor to indicate brake lining wear
- Composite sealing system with plastic and felt wiper elements to remove dirt and lubricate the slideway
- Blocking function in case of pressure loss
- Intermediate stops possible

Function:

The Multi-Brake is a passive device. When the air pressure is removed the brake is actuated and movement of the cylinder is blocked. The brake is released by pressurisation.
The high friction, wear resistant brake linings allow the Multi-Brake to be used as a dynamic brake to stop cylinder movement in the shortest possible time. The powerful springs also allow the Multi-Brake to be used effectively in positioning applications.

Series	For linear drive	Max. moments [Nm] M	Ms	Mv	Max. loads [N] L1, L2	Max. brake force [N] 1)	Mass of linear drive with guide [kg] with 0 mm stroke	increase per 100 mm stroke	Mass* guide carriage [kg]	Order No.. – MB-PL without sensor	with sensor for wear indication
MB-PL 25	OSP-P25	55	23	55	1210	315	2.14	0.40	1.24	**20864**	**20868**
MB-PL 32	OSP-P32	91	36	91	1460	490	4.08	0.62	2.02	**20865**	**20869**
MB-PL 40	OSP-P40	198	72	198	2600	715	5.46	0.70	2.82	**20866**	**20870**
MB-PL 50	OSP-P50	313	139	313	3890	1100	8.60	0.95	4.07	**20867**	**20871**

1) Braking surface dry – oil on the braking surface will reduce the braking force
* **Please note:**
In the cushioning diagram, the mass of the guide carriage has to be added to the total moving mass.

For **linear drives** see 1.10.002E
For **mountings** see 1.45.005E

A1P616E00KAA00X
The right to introduce technical modifications is reserved

HOERBIGER ORIGA

Series OSP-P with Passive Brake MB-PL

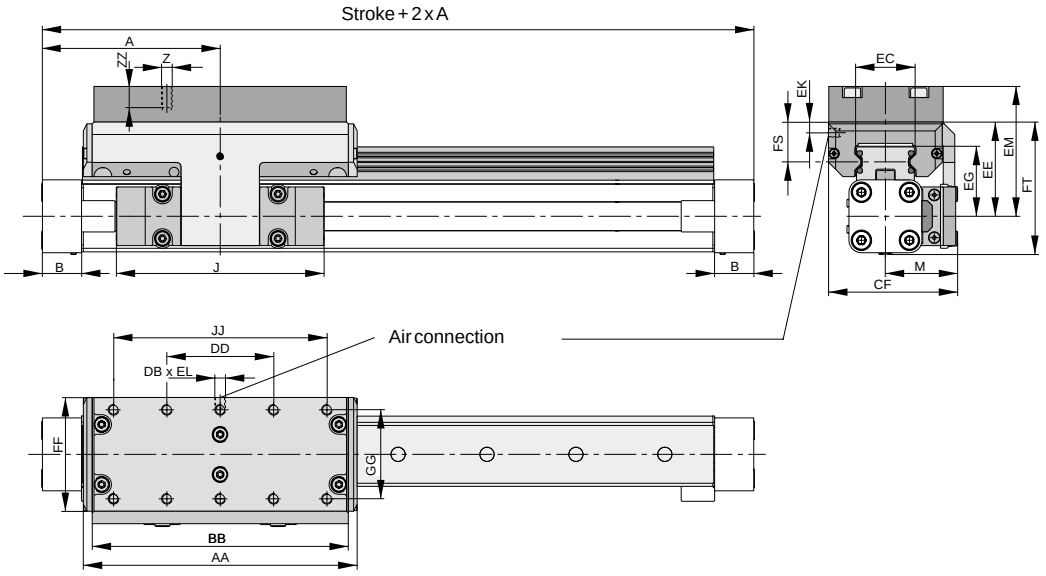

Dimension Table (mm) Series OSP-P MB-PL25, MB-PL32, MB-PL40, MB-PL50

Series	A	B	J	M	Z	AA	BB	DB	DD	CF	EC	EE	EG	EK	EL	EM	FF	FS	FT	GG	JJ	ZZ
MB-PL25	100	22	117	40.5	M6	154	144	M5	60	72.5	32.5	53	39	9	5	73	64	23	73.5	50	120	12
MB-PL32	125	25.5	152	49	M6	197	187	G1/8	80	91	42	62	48	7	10	82	84	25	88	64	160	12
MB-PL40	150	28	152	55	M6	232	222	G1/8	100	102	47	64	50.5	6.5	10	84	94	23.5	98.5	78	200	12
MB-PL50	175	33	200	62	M6	276	266	G1/8	120	117	63	75	57	10	12	95	110	29	118.5	90	240	16

Mid Section Support

(for versions see 1.45.005E)

Mid section supports are required from a certain stroke length to prevent excessive deflection and vibration of the linear drive. The diagrams show the maximum permissable unsupported length in relation to loading. A distinction must be drawn between loading 1 and loading 2. Deflection of 0.5 mm max. between supports is permissable.

Note:

For speeds v > 0.5 m/s the distance between supports should not exceed 1 m.

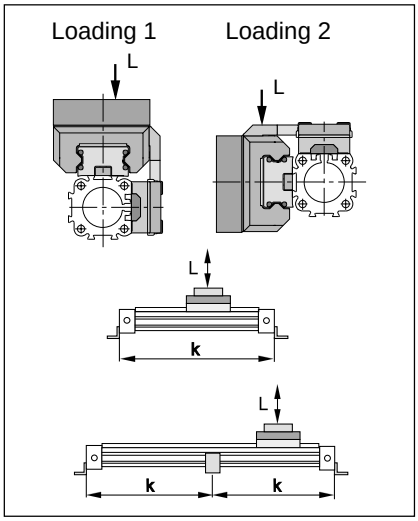

Permissible Unsupported Length OSP-P MB-PL25, MB-PL32, MB-PL40, MB-PL50

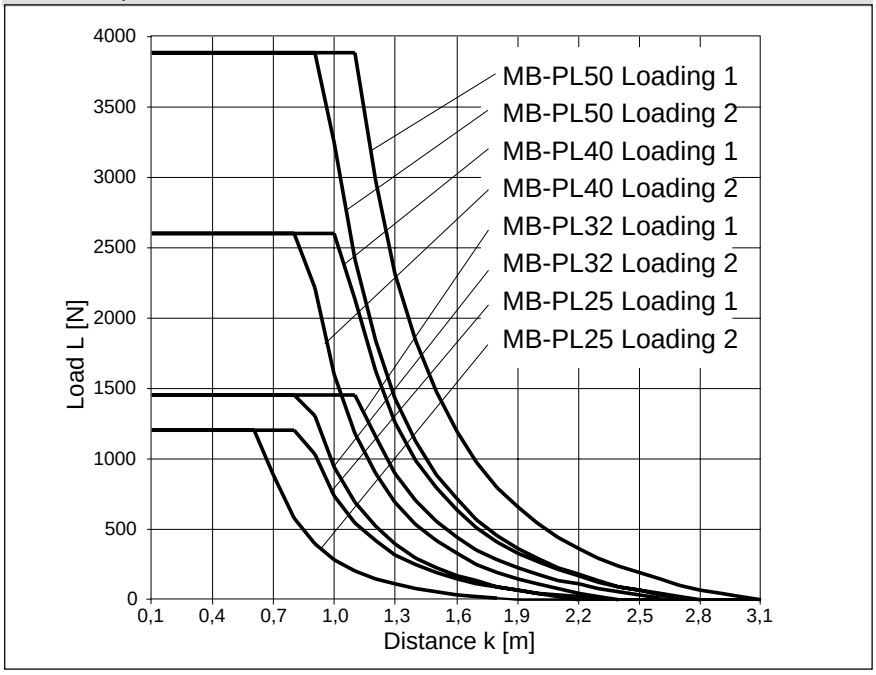

Application Example - Vertical Application

Control of a cylinder with
3/2 way valves. Basic position – **exhausted**

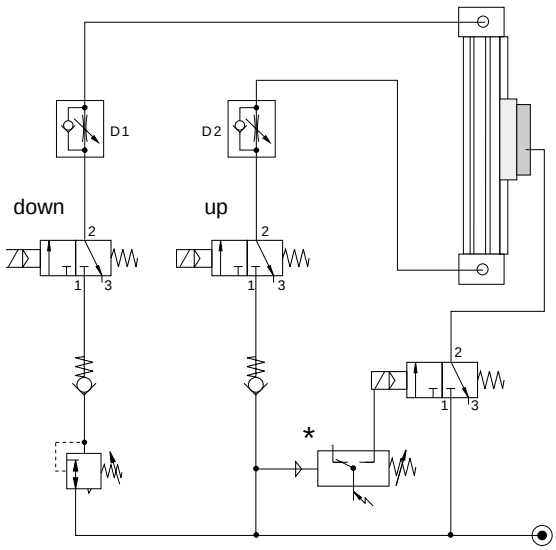

Control of a cylinder with
3/2 way valves. Basic position – **pressurised**

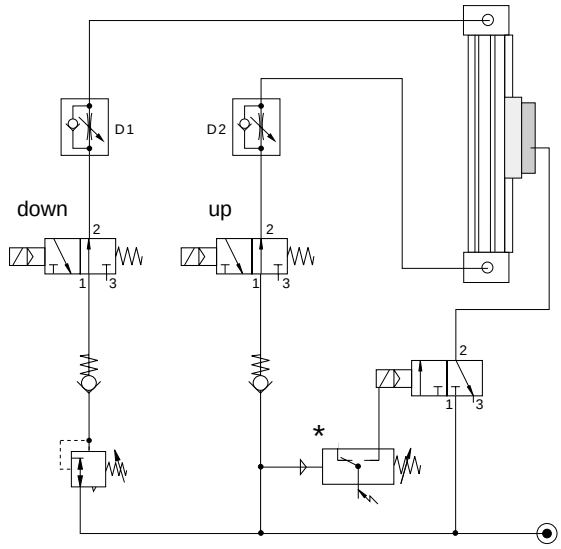

Control Examples

Under normal operating circumstances the pressure switch is closed and the air flows through the 3/2 way solenoid valves from port 1 to 2, thus lifting the brake from the rail (operating condition).
The brake is pressu-rised by means of a 3/2 way valve in combination with a pressure switch. When there is a pressure loss, the brake is actuated by the pressure switch.
When the air pressure is restored to both cylinder chambers, the brake is lifted and the linear drive can be moved again.

The speed regulating valves D1 and D2 control the speed of the linear drive, and have no influence on the brake. The two non-return valves give the system a higher stability.

The pressure regulating valve is used to compensate for the downward force in this vertical application.

Please note:
Before the brake is lifted, make sure that both air chambers of the linear drive are pressurised. Small diameter tubing, fittings and valves with a nominal diameter, and tubing that is too long all change the reaction time of the brake!

***Tip:**
The pressure switch actuates the brake when the pressure drops below the set value.

For accessories, such as tubing and fittings, please refer to our separate catalogue.

Required Components

Way Valves	
Port size	Data Sheet
M5	3.10.002E
G1/8	3.42.005E
G1/4	3.52.006E
G1/2	3.53.005E
Pressure Regulating Valve	
G1/8 - G3/8	5.12.006E
P/E-Converter see prospect A3 P142E in pneumatic catalogue chapter 6	
Non-Return Valves	
G1/8, G1/4	4.10.001E
G3/8	4.11.001E
Screw-in Speed Regulating Valves	
M5 - G1/4	4.45.002E

Linear Drive-Accessories (Mountings and Proximity Sensors) Series OSP-P

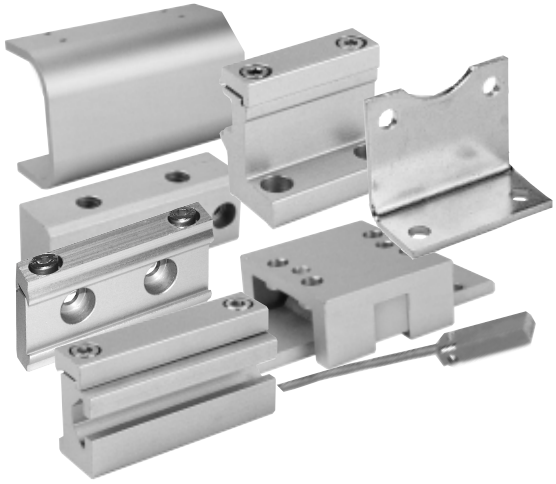

Contents

Description	Data Sheet No.	Page
Overview	1.45.001E	52
Clevis Mounting	1.45.002E	53-54
End Cap Mountings	1.45.003E	55
End Cap Mountings (for Linear Drives with guides)	1.45.005E-2	58
Mid-Section Support	1.45.004E	56
Mid-Section Support (for Linear Drives with guides)	1.45.005E-3	59
Inversion Mounting	1.45.006E	61
Adaptor Profile	1.45.007E	62
T-Nut Profile	1.45.008E	63
Adaptor Profile	1.45.009E	64
Proximity Sensors	1.45.100E	65-67

HOERBIGER-ORIGA GMBH · Südliche Römerstraße 15 · D-86972 Altenstadt · Tel. +49 +8861 221-0 · Fax +49 +8861 221-1305 · E-mail preu@hoerbiger.de
HOERBIGER-ORIGA GMBH · Industriestr. 8 · D-70794 Filderstadt · Tel. +49 +7158 1703-0 · Fax +49 +7158 64870 · E-mail dmarket@hoerbiger-origa.com
HOERBIGER-ORIGA LTD. · Tewkesbury Industrial Estate · Tewkesbury GL 20 8 ND GB · Tel. +44 1684 85 00 00 · Fax +44 1684 85 05 55
E-mail sales@hoerbiger-origa.com
HOERBIGER-ORIGA Pneumatik GmbH · Dr. Alexander-Schärf-Straße 12 · A-2700 Wiener Neustadt · Tel. +43 +2622 26071-0 · Fax +43 +2622 26071-5
E-mail amarket@hoerbiger-origa.com
HOERBIGER-ORIGA AB · Kungsgatan 10, Box 67 · SE-73622 Kungsör · Tel. +46 227 411 00 · Fax +46 227 411 29 · E-mail semarket@hoerbiger-origa.com
Internet http://www.hoerbiger-origa.com

Linear Drive Acccessories for Series OSP-P	
Description	Data Sheet No.
Clevis Mounting	1.45.002E
End Cap Mountings	1.45.003E
End Cap Mountings (for Linear Drives with guides)	1.45.005E
Mid-Section Support	1.45.004E
Mid-Section Support (for Linear Drives with guides)	1.45.005E
Inversion Mounting	1.45.006E
Adaptor Profile	1.45.007E
T-Nut Profile	1.45.008E
Adaptor Profile	1.45.009E
Proximity Sensors	1.45.100E

A3P111E00KAA00X

The right to introduce technical modifications is reserved

Series OSP-P10

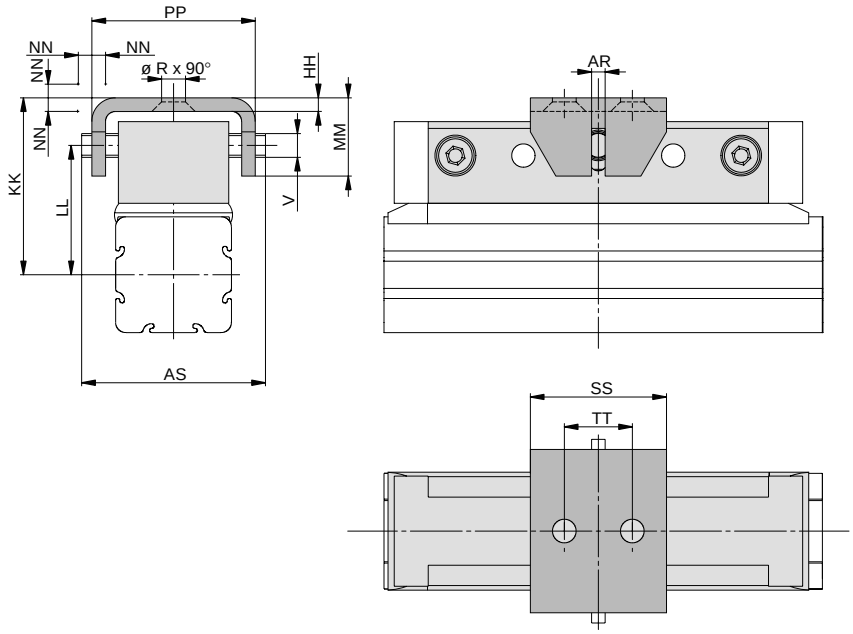

Linear Drive Accessories

ø 10 mm
Clevis Mounting

OSP
ORIGA
SYSTEM
PLUS

For Linear-drive
• Series OSP-P

When external guides are used, parallelism deviations can lead to mechanical strain on the piston. This can be avoided by the use of a clevis mounting.
In the drive direction, the mounting has very little play.
Freedom of movement is provided as follows:

- **Tilting in direction of movement**
- **Vertical compensation**
- **Tilting sideways**
- **Horizontal compensation**

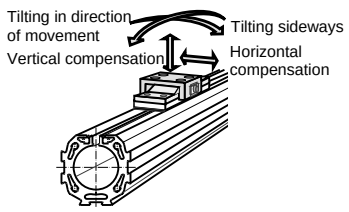

Dimension Table (mm)

Series	øR	V	AR	AS	HH	KK	LL	MM	NN*	PP	SS	TT	Order No. Standard	Order No. Stainless
OSP-P10	3.4	3.5	2	27	2	26	19	11.5	1	24	20	10	**20971**	–

* Dimension NN gives the possible plus and minus play in horizontal and vertical movement, which also makes tilting sideways possible.

For **rodless pneumatic cylinder OSP-P** see 1.10.002E

A1P578E00KAA00X

The right to introduce technical modifications is reserved

HOERBIGER ORIGA

Linear Drive Accessories

ø 16-80 mm
Clevis Mounting

OSP
ORIGA SYSTEM PLUS

For Linear-drive
• Series OSP-P

When external guides are used, parallelism deviations can lead to mechanical strain on the piston. This can be avoided by the use of a clevis mounting.
In the drive direction, the mounting has very little play.
Freedom of movement is provided as follows:

- **Tilting in direction of movement**
- **Vertical compensation**
- **Tilting sideways**
- **Horizontal compensation**

A stainless steel version is also available.

Series OSP-P16 to 32

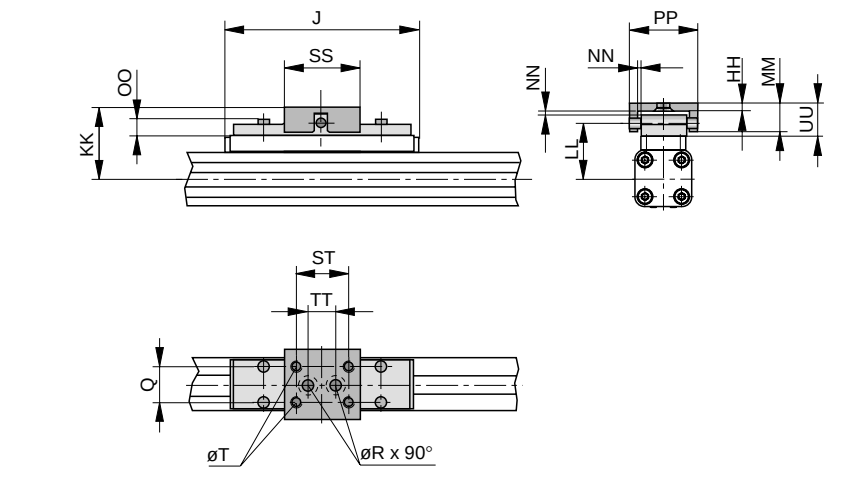

Series OSP-P40 to 80

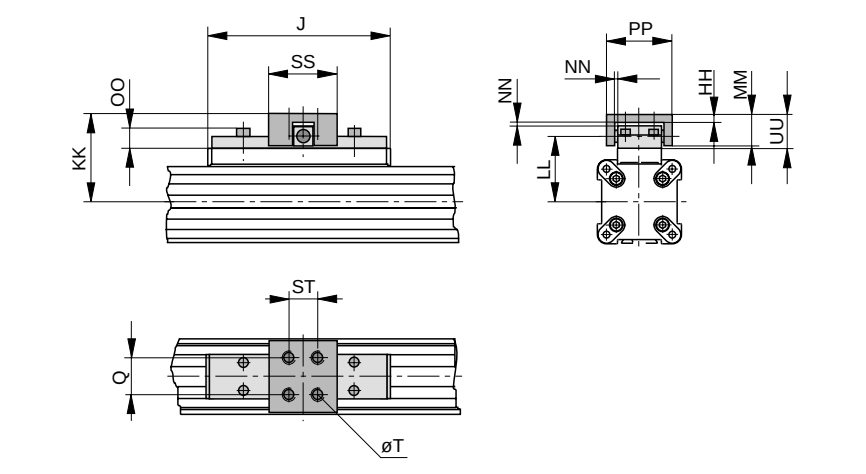

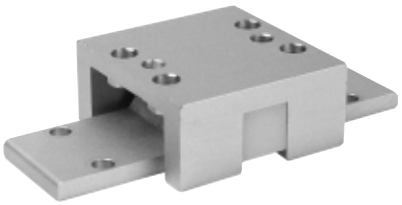

Please note:
When using additional inversion mountings, take into account the dimensions in data sheet 1.45.006E.

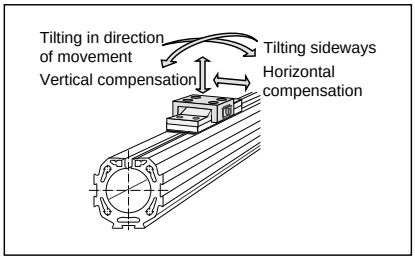

Dimension Table (mm)

Series	J	Q	T	øR	HH	KK	LL	MM	NN*	OO	PP	SS	ST	TT	UU	Order No. Standard	Order No. Stainless
OSP-P16	69	10	M4	4.5	3	34	26.6	10	1	8.5	26	28	20	10	11	**20462**	**20463**
OSP-P25	117	16	M5	5.5	3.5	52	39	19	2	9	38	40	30	16	21	**20005**	**20092**
OSP-P32	152	25	M6	6.6	6	68	50	28	2	13	62	60	46	40	30	**20096**	**20094**
OSP-P40	152	25	M6	–	6	74	56	28	2	13	62	60	46	–	30	**20024**	**20093**
OSP-P50	200	25	M6	–	6	79	61	28	2	13	62	60	46	–	30	**20097**	**20095**
OSP-P63	256	37	M8	–	8	100	76	34	3	17	80	80	65	–	37	**20466**	**20467**
OSP-P80	348	38	M10	–	8	122	96	42	3	16	88	90	70	–	42	**20477**	**20478**

* Dimension NN gives the possible plus and minus play in horizontal and vertical movement, which also makes tilting sideways possible.

For **rodless pneumatic cylinder OSP-P** see 1.10.002E

Linear Drive Accessories

ø 10-80 mm

End Cap Mountings

OSP
ORIGA SYSTEM PLUS

For Linear-drive
• Series OSP-P

On the end-face of each end cap there are four threaded holes for mounting the actuator. The hole layout is square, so that the mounting can be fitted to the bottom, top or either side, regardless of the position chosen for the air connection.

Material:
Series OSP-P10 – P32:
Galvanised steel.
Series OSP-P40 – P80:
Anodized aluminium.

The mountings are supplied in pairs.

Series OSP-P10 : Type A1

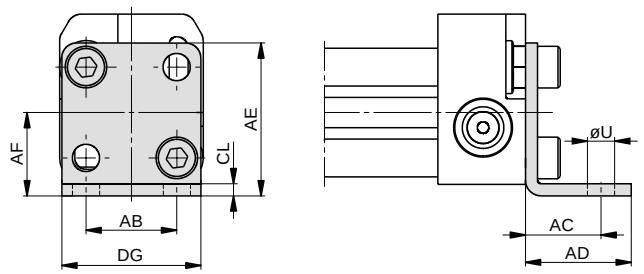

Series OSP-P16 to 32: Type A1

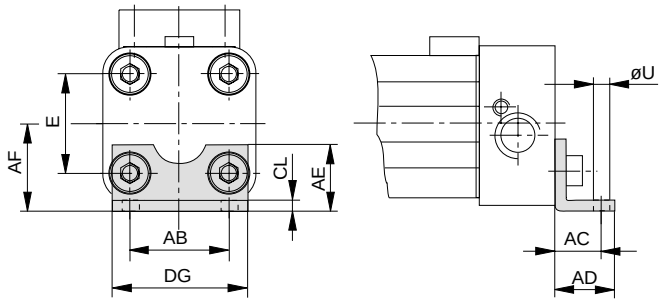

Series OSP-P40 to 80: Type C1

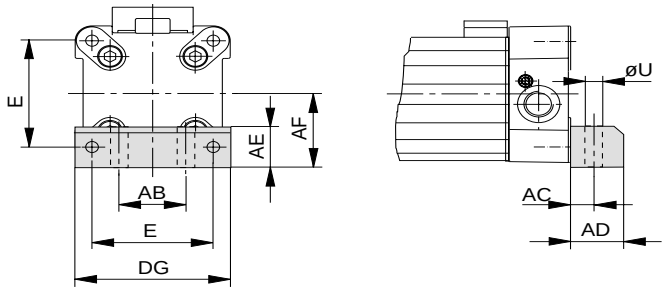

Dimension Table (mm)

Series	E	ØU	AB	AC	AD	AE	AF	CL	DG	Order No. (* Type A1	Order No. (* Type C1
OSP-P10	-	3.6	12	10	14	20.2	11	1.6	18.4	**0 240**	**–**
OSP-P16	18	3.6	18	10	14	12.5	15	1.6	26	**20408**	**–**
OSP-P25	27	5.8	27	16	22	18	22	2.5	39	**2010**	**–**
OSP-P32	36	6.6	36	18	26	20	30	3	50	**3010**	**–**
OSP-P40	54	9	30	12.5	24	24	38	–	68	**–**	**4010**
OSP-P50	70	9	40	12.5	24	30	48	–	86	**–**	**5010**
OSP-P63	78	11	48	15	30	40	57	–	104	**–**	**6010**
OSP-P80	96	14	60	17.5	35	50	72	–	130	**–**	**8010**

(*= Pair

For **rodless pneumatic cylinder OSP-P** see 1.10.002E

A1P579E00KAA00X

The right to introduce technical modifications is reserved

HOERBIGER ORIGA

Linear Drive Accessories

ø 10-80 mm
Mid-Section Support

OSP
ORIGA SYSTEM PLUS

For Linear-drive
• Series OSP-P

Note on Types E1 and D1 (P16 – P80): The mid-section support can also be mounted on the underside of the actuator, in which case its distance from the centre of the actuator is different.

For design notes, see data sheet 1.10.002E-2

Stainless steel version on demand.

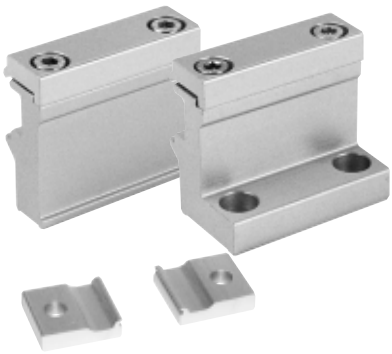

Series OSP-10, Type E1
(Mounting from above / below using a cap screw)

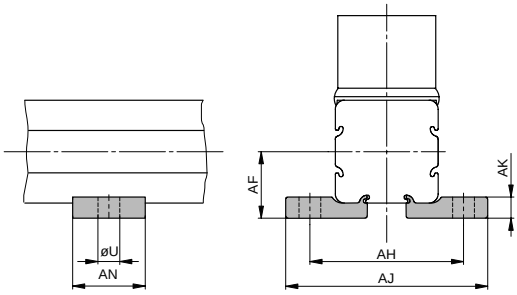

Series OSP-P16 to P80: Type E1
(Mounting from above / below using a cap screw)

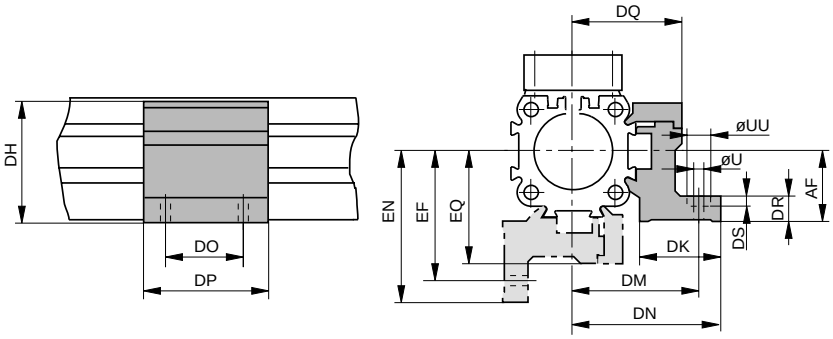

Series OSP-16 to 80, Type D1
(Mountings from below with 2 screws)

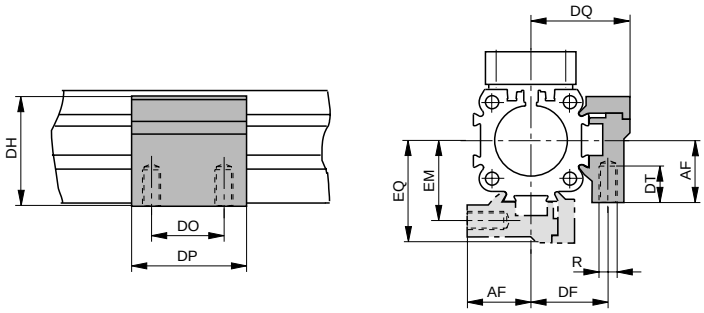

Dimension Table (mm) Series OSP-P10

Series	U	AF	AH	AJ	AK	AN	Order No. Type E1	Order No. Type D1
OSP-P10	3.6	11	25.4	33.4	3.5	12	**0250**	**-**

Dimension Table (mm) – Series OSP-P16 to P80

Series	R	U	UU	AF	DF	DH	DK	DM	DN	DO	DP	DQ	DR	DS	DT	EF	EM	EN	EQ	Order No. Type E1	Order No. Type D1
OSP-P16	M3	3.4	6	15	20	29.2	24	32	36.4	18	30	27	6	3.4	6.5	32	20	36.4	27	**20435**	**20434**
OSP-P25	M5	5.5	10	22	27	38	26	40	47.5	36	50	34.5	8	5.7	10	41.5	28.5	49	36	**20009**	**20008**
OSP-P32	M5	5.5	10	30	33	46	27	46	54.5	36	50	40.5	10	5.7	10	48.5	35.5	57	43	**20158**	**20157**
OSP-P40	M6	7	–	38	35	61	34	53	60	45	60	45	10	–	11	56	38	63	48	**20028**	**20027**
OSP-P50	M6	7	–	48	40	71	34	59	67	45	60	52	10	–	11	64	45	72	57	**20163**	**20162**
OSP-P63	M8	9	–	57	47.5	91	44	73	83	45	65	63	12	–	16	79	53.5	89	69	**20452**	**20451**
OSP-P80	M10	11	–	72	60	111.5	63	97	112	55	80	81	15	–	25	103	66	118	87	**20482**	**20480**

A1P580E00KAA00X

The right to introduce technical modifications is reserved

HOERBIGER ORIGA

For **rodless pneumatic cylinder OSP-P** see 1.10.002E

Linear Drive Accessories

Mountings for Linear Drives fitted with OSP-Guides

OSP
ORIGA SYSTEM PLUS

For Linear-drive
• Series OSP-P

Overview

Mounting Type	Type	Type – OSP Guides: SLIDELINE PROLINE MULTIBRAKE 16 1)	25	32	40	50	63 1)	80 1)	POWERSLIDE 16/25	25/25	25/35	25/44	32/35	32/44	40/44	40/60	50/60	50/76
End cap mounting	Type A1	X							X									
	Type A2	O	O	O														
	Type A3									O	O		O					
End cap mounting, reinforced	Type B1		X	X						X	X	X	X	X				
	Type B3								O									
	Type B4											O		O				
	Type B5																	
End cap mounting	Type C1				X	X	X	X							X	X	X	X
	Type C2				O	O												
	Type C3						O	O							O		O	
	Type C4															O		O
Mid section support, small	Type D1	X	X	X	X	X	X	X	X	X	X	X	X	X	X	X	X	X
Mid section support, wide	Type E1	X	X	X	X	X	X	X	X	X	X	X	X	X	X	X	X	X
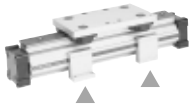	Type E2	O	O	O	O	O												
	Type E3						O	O	O	O	O		O		O		O	
	Type E4											O		O		O		O
	Type E5																	

X = carriage mounted in top (12 o'clock position)

O = carriage mounted in lateral (3 or 9 o'clock position)

= available components

1) = not available for all sizes

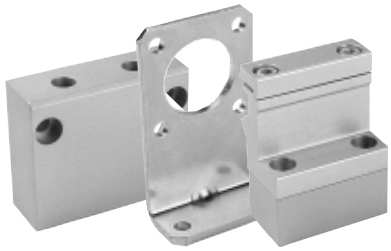

HOERBIGER ORIGA

For **linear drives** see 1.10.002E

A1P542E00KAA00X

The right to introduce technical modifications is reserved

End cap mountings *

Four internal screw threads are located in the end faces of all OSP actuators for mounting the drive unit. End cap mountings may be secured across any two adjacent screws.

Material: Series OSP-16, 25, 32: zinc plated steel
Series OSP-40,50, 63, 80: anodized aluminium

Supplied in pairs.

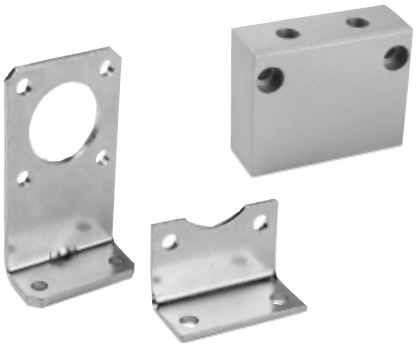

Series OSP – 16, 25, 32: Type A

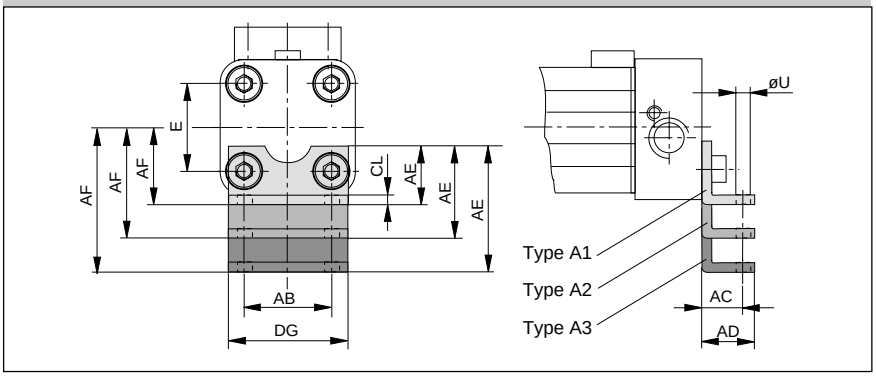

Series OSP – 16, 25, 32: Type B

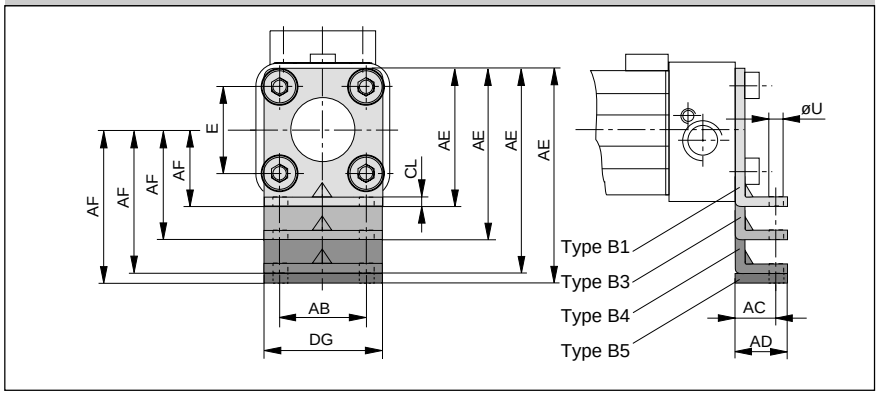

Dimension Table (mm)
– Dimensions AE and AF (Dependant on the mounting type)

Mount. type	Dimensions AE for size							AF for size						
	16	25	32	40	50	63	80	16	25	32	40	50	63	80
A1	12.5	18	20	–	–	–	–	15	22	30	–	–	–	–
A2	27.5	33	34	–	–	–	–	30	37	44	–	–	–	–
A3	–	45	42	–	–	–	–	–	49	52	–	–	–	–
B1	–	42	55	–	–	–	–	–	22	30	–	–	–	–
B3	55	–	–	–	–	–	–	42	–	–	–	–	–	–
B4	–	80	85	–	–	–	–	–	60	60	–	–	–	–
B5	–	–	90	–	–	–	–	–	–	65	–	–	–	–
C1	–	–	–	24	30	40	50	–	–	–	38	48	57	72
C2	–	–	–	37	39	–	–	–	–	–	51	57	–	–
C3	–	–	–	46	54	76	88	–	–	–	60	72	93	110
C4	–	–	–	56	77	–	–	–	–	–	70	95	–	–

Series OSP – 40, 50, 63, 80: Type C

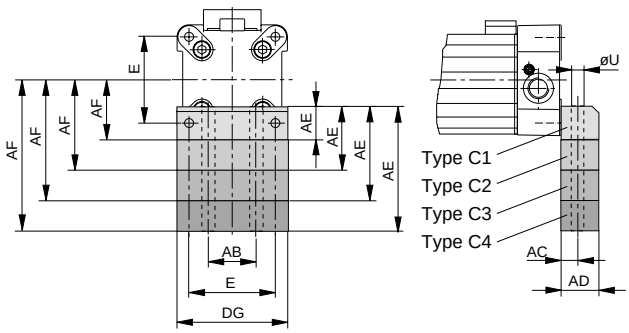

Dimension Table (mm)

Series	E	øU	AB	AC	AD	CL	DG
OSP-P16	18	3.6	18	10	14	1.6	26
OSP-P25	27	5.8	27	16	22	2.5	39
OSP-P32	36	6.6	36	18	26	3	50
OSP-P40	54	9	30	12.5	24	-	68
OSP-P50	70	9	40	12.5	24	-	86
OSP-P63	78	11	48	15	30	-	104
OSP-P80	96	14	60	17.5	35	-	130

* see mounting instructions on page 1.45.005E-1

Series OSP-16 to 80: Type E.
(Mounting from above / below using a cap screw)

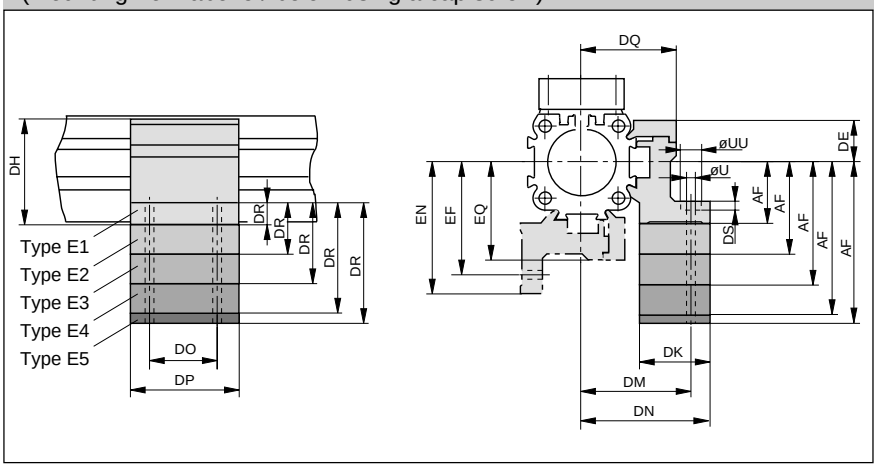

Mid section supports

Information regarding type E1 and D1:

Mounting of the mid section supports is also possible on the lower side of the drive. In this case, please note the new centre line dimensions.

See layout information on data sheet no. 1.40.002E-2, 1.40.003E-3, 1.40.005E-3, 1.42.003E-3 and 1.42.004E-3

Stainless steel version on request.

Series OSP-16 to 80: Type D1
(Mounting from below with thread screw)

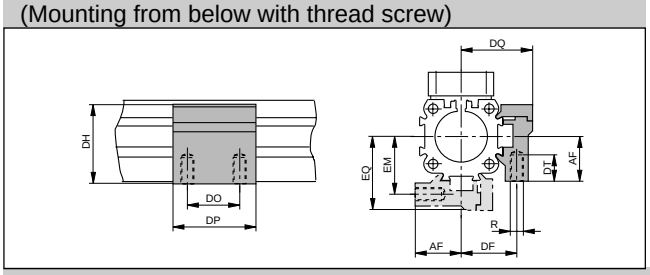

Dimension Table (mm)
– Dimensions AF and DR (Dependant on the mounting type)

Mount. type	Dimensions DR for size							Dimensions AF for size						
	16	25	32	40	50	63	80	16	25	32	40	50	63	80
D1	–	–	–	–	–	–	–	15	22	30	38	48	57	72
E1	6	8	10	10	10	12	15	15	22	30	38	48	57	72
E2	21	23	24	23	19	–	–	30	37	44	51	57	–	–
E3	33	35	32	32	34	48	53	42	49	52	60	72	93	110
E4	–	46	40	42	57	–	–	–	60	60	70	95	–	–
E5	–	–	45	–	–	–	–	–	–	65	–	–	–	–

Dimension Table (mm)

Series	R	U	UU	DE	DF	DH	DK	DM	DN	DO	DP	DQ	DS	DT	EF	EM	EN	EQ
OSP-P16	M3	3.4	6	14.2	20	29.2	24	32	36.4	18	30	27	3.4	6.5	32	20	36.4	27
OSP-P25	M5	5.5	10	16	27	38	26	40	47.5	36	50	34.5	5.7	10	41.5	28.5	49	36
OSP-P32	M5	5.5	10	16	33	46	27	46	54.5	36	50	40.5	5.7	10	48.5	35.5	57	43
OSP-P40	M6	7	–	23	35	61	34	53	60	45	60	45	–	11	56	38	63	48
OSP-P50	M6	7	–	23	40	71	34	59	67	45	60	52	–	11	64	45	72	57
OSP-P63	M8	9	–	34	47.5	91	44	73	83	45	65	63	–	16	79	53.5	89	69
OSP-P80	M10	11	–	39.5	60	111.5	63	97	112	55	80	81	–	25	103	66	118	87

Ordering information for mountings Type A – Type B – Type C – Type D – Type E

Mounting type (versions)	Order No. size						
	16	25	32	40	50	63	80
A1*)	20408	2010	3010	–	–	–	–
A2*)	20464	2040	3040	–	–	–	–
A3*)	–	2060	3060	–	–	–	–
B1*)	–	20311	20313	–	–	–	–
B3*)	20465	–	–	–	–	–	–
B4*)	–	20312	20314	–	–	–	–
B5*)	–	–	20976	–	–	–	–
C1*)	–	–	–	4010	5010	6010	8010
C2*)	–	–	–	20338	20349	–	–
C3*)	–	–	–	20339	20350	20821	20822
C4*)	–	–	–	20340	20351	–	–
D1	20434	20008	20157	20027	20162	20451	20480
E1	20435	20009	20158	20028	20163	20452	20482
E2	20436	20352	20355	20358	20361	–	–
E3	20437	20353	20356	20359	20362	20453	20819
E4	–	20354	20357	20360	20363	–	–
E5	–	–	20977	–	–	–	–

(* Pair)

Linear Drive Accessories

ø 16-80 mm
Inversion Mounting

OSP
ORIGA SYSTEM PLUS

For Linear-drive
• Series OSP-P

In dirty environments, or where there are special space problems, inversion of the cylinder is recommended. The inversion bracket transfers the driving force to the opposite side of the cylinder. The size and position of the mounting holes are the same as on the standard cylinder.

Stainless steel version on demand.

Please note:
Other components of the OSP system such as **mid-section supports, proximity switches** and **the external air passage for the P16,** can still be mounted on the free side of the cylinder.

When combining single end porting with inversion mountings, RS switches can only be mounted directly opposite to the external air-supply profile.

Important Note:
May be used in combination with Clevis Mounting, ref. data sheet 1.45.002E

Series OSP-P16 to 32

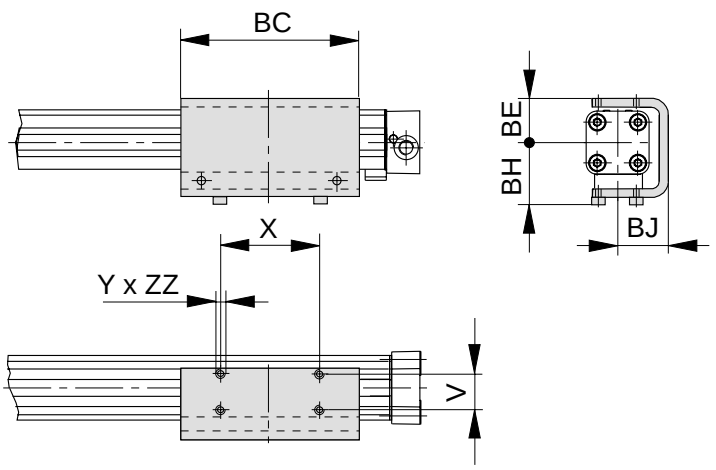

Series OSP-P40 to 80

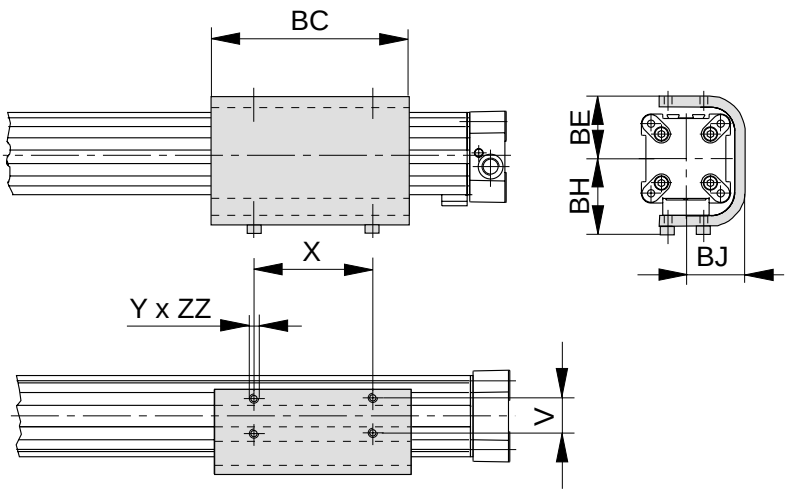

Dimension Table (mm)

Series	V	X	Y	BC	BE	BH	BJ	ZZ	Order No.
OSP-P16	16.5	36	M4	69	23	33	25	4	**20446**
OSP-P25	25	65	M5	117	31	44	33.5	6	**20037**
OSP-P32	27	90	M6	150	38	52	39.5	6	**20161**
OSP-P40	27	90	M6	150	46	60	45	8	**20039**
OSP-P50	27	110	M6	180	55	65	52	8	**20166**
OSP-P63	34	140	M8	255	68	83.5	64	10	**20459**
OSP-P80	36	190	M10	347	88	107.5	82	15	**20490**

For **rodless pneumatic cylinder OSP-P** see 1.10.002E

A1P581E00KAA00X
The right to introduce technical modifications is reserved

HOERBIGER ORIGA

Linear Drive Accessories

ø 16-50 mm

Adaptor Profile

OSP
ORIGA SYSTEM PLUS

For Linear-drive
- **Series OSP-P**

Adaptor Profile OSP
- A universal attachment for mounting of valves etc.
- Solid material

Dimensions

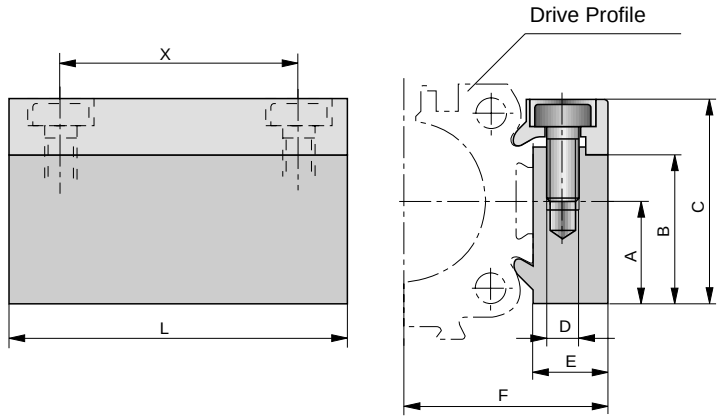

Dimension Table (mm)

Series	A	B	C	D	E	F	L	X	Order No. Standard	Order No. Stainless
OSP-P16	14	20.5	28	M3	12	27	50	38	**20432**	**20438**
OSP-P25	16	23	32	M5	10.5	30.5	50	36	**20006**	**20186**
OSP-P32	16	23	32	M5	10.5	36.5	50	36	**20006**	**20186**
OSP-P40	20	33	43	M6	14	45	80	65	**20025**	**20267**
OSP-P50	20	33	43	M6	14	52	80	65	**20025**	**20267**

A1P582E00KAA00X

The right to introduce technical modifications is reserved

HOERBIGER ORIGA

For **rodless pneumatic cylinder OSP-P** see 1.10.002E

Linear Drive Accessories

ø 16-50 mm

T-Nut Profile

OSP
ORIGA SYSTEM PLUS

For Linear-drive
• Series OSP-P

Dimensions

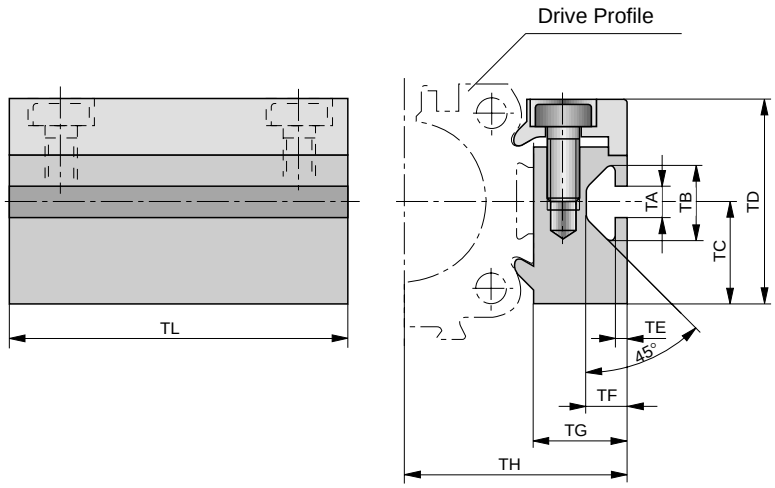

T-Nut Profile OSP

• A universal attachment for mounting with standard T-Nuts

Dimension Table (mm)

Series	TA	TB	TC	TD	TE	TF	TG	TH	TL	Order No. Standard	Order No. Stainless
OSP-P16	5	11.5	14	28	1.8	6.4	12	27	50	**20433**	**20439**
OSP-P25	5	11.5	16	32	1.8	6.4	14.5	34.5	50	**20007**	**20187**
OSP-P32	5	11.5	16	32	1.8	6.4	14.5	40.5	50	**20007**	**20187**
OSP-P40	8.2	20	20	43	4.5	12.3	20	51	80	**20026**	**20268**
OSP-P50	8.2	20	20	43	4.5	12.3	20	58	80	**20026**	**20268**

Following T-Nuts from the company ITEM could be used:

Cyl.-Series	T-Nut St 5	T-Nut St 8
OSP-P16-32	●	
OSP-P40-50	●	

For **rodless pneumatic cylinder OSP-P** see 1.10.002E

A1P583E00KAA00X

The right to introduce technical modifications is reserved

Linear Drive Accessories

ø 16-50 mm
Verbindungsschiene

OSP
ORIGA SYSTEM PLUS

For combining
- **Series OSP-P with system profiles**
- **Series OSP-P with Series OSP-P**

Dimensions

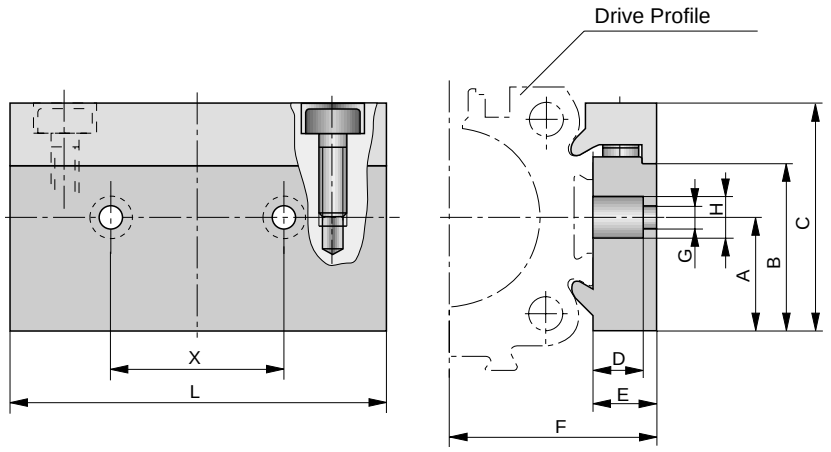

Dimension Table (mm)

Cyinder Series	for mounting on the carrier of	A	B	C	D	E	F	G	H	L	X	Order No.
OSP-P16	OSP25	14	20.5	28	8.5	12	27	5.5	10	50	25	**20849**
OSP-P25	OSP32-50	16	23	32	8.5	10.5	30.5	6.6	11	60	27	**20850**
OSP-P32	OSP32-50	16	23	32	8.5	10.5	36.5	6.6	11	60	27	**20850**
OSP-P40	OSP32-50	20	33	43	8	14	45	6.6	11	60	27	**20851**
OSP-P50	OSP32-50	20	33	43	8	14	52	6.6	11	60	27	**20851**

Possible Combinations

Combination of Series OSP-P with system profiles

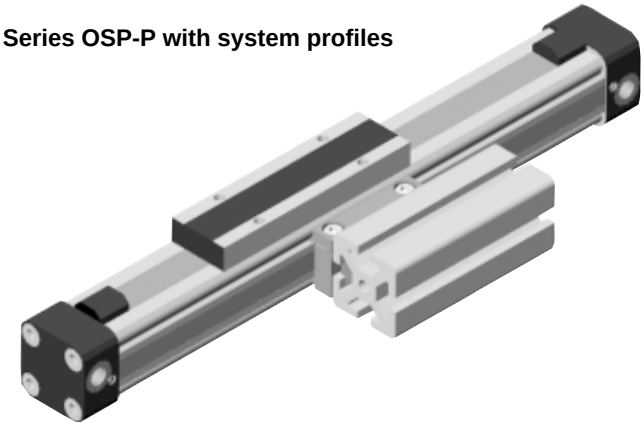

Combination of Series OSP-P with Series OSP-P

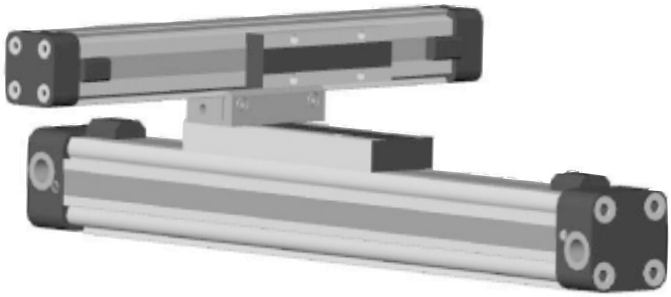

For **rodless pneumatic cylinder OSP-P** see 1.10.002E

A1P681E00KAA00X

The right to introduce technical modifications is reserved

HOERBIGER ORIGA

Linear Drive Accessories

ø 10-80 mm Proximity Sensors

OSP
ORIGA SYSTEM PLUS

For electrical sensing of the carrier position, e.g. at the end positions, proximity sensors may be fitted. Position sensing is contactless and is based on magnets fitted as standard to the carrier. A yellow LED indicates operating status.

The universal proximity sensors are suitable for all HOERBIGER-ORIGA OSP-Actuators and aluminum profile rod type cylinders.

Piston, speed and switching distance affect signal duration and should be considered in conjunction with the minimum reaction time of ancillary control equipment.

$$\text{Min. reaction time} = \frac{\text{Switching distance}}{\text{Piston speed}}$$

Characteristics to VDI 3292

Characteristics	Symbol	Unit	Description	
Electrical Characteristics			**Type RS**	**Type ES**
Operating voltage	U_B	V	10-240 AC/DC (NO) 10-150 AC/DC (NC)	10-30 DC
Connection			Two wire	Three wire
Switching function			Normally open (NO) Normally closed (NC)	PNP closing NPN
Max. permanent switching current	I_{Dmax}	mA	200	200
Max. switching capacity		VA (W)	10 VA	—
Residual voltage at I_{Lmax}		V	<3	<3
Max. current consumption		mA	—	<20
Status indicator			LED, yellow	
Typical switching time		ms	on: <2	on: <2
Switch-off delay		ms	—	ca. 25
Pole reversal			LED does not work	—
Pole reversal protection			-	Built in
Short circuit protection			-	Built in
Switchable capacity		µF	0,1 at 100 Ω, 24 VDC	
Switching distance		mm	ca. 15	ca. 15
Hysteresis for OSP		mm	ca. 8	ca. 3
Mechanical Characteristics				
Housing			Makrolon, grey	
Insulation class			F to VDE 0580	
Connection *)			Cable, 5 m long	3-pole connector M8, cable length ca.100mm
Cable cross section (highly flexible)		mm^2	2 x 0.14	3 x 0.14
Cable (highly flexible)*)			PVC	PUR, black
Wire colours			brown AC/DC+ blue or white signal output	Pin 1 = +, brown Pin 3 = 0V, blue Pin 4 = Signal black or white
Permissible minimum bending radius of cable	fixed		mm ≥ 20	
	moving		mm ≥ 70	
Switching point accuracy		mm	±0.2	
Temperature range *)	ϑ_{min} ϑ_{max}	°C °C	-25 +80	other temperature ranges on request
Service life Switching cycles			3×10^6 up to 6×10^6	Theoretically unlimited
Electrical protection		IP	67 to DIN 40005	
Shock resistance		m/s^2	100 (contact switches)	500
Weight (mass)		kg	0.12	

*) other versions on request

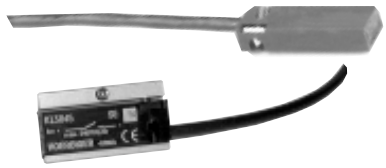

For **linear drives** see 1.10.002E

A1P537E00HAA00X

The right to introduce technical modifications is reserved

HOERBIGER ORIGA

Type RS

In the type RS contact is made by a mechanical **reed switch** encapsulated in glass.
Direct connection with 2-pole cable, 5 m long, open ended **(Type RS-K).**

Type ES

In the type ES contact is made by an **electronic switch** – without bounce or wear and protected from pole reversal. The output is short circuit proof and insensitive to shocks and vibrations. Connection is by 3-pole connector for easy disconnection. Fitted with connection cable 100 mm long with connector. A 5 m cable with connector and open end can be ordered separatly, or use the Order No. for the complete Type ES with 5 m cable.

Proximity Sensors RS and ES

Electrical Service Life
Protective Measures
Magnetic switches are sensitive to excessive currents and inductions. With high switching frequencies and inductive loads such as relays, solenoid valves or lifting magnets, service life will be greatly reduced.

With **resistive and capacitative loads** with high switch-on current, such as light bulbs, a protective resistor should be fitted. This also applies to long cable lengths and voltages over 100 V.

In the switching of inductive loads such as relays, solenoid valves and lifting magnets, voltage peaks (transients) are generated which must be suppressed by protective diodes, RC loops or varistors.

Connection Examples
Load with protective circuits
(a) Protective resistor for light bulb
(b) Freewheel diode on inductivity
(c) Varistor on inductivity
(d) RC element on inductivity

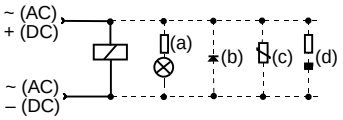

For the type ES, external protective circuits are not normally needed.

Electrical Connection, Type RS

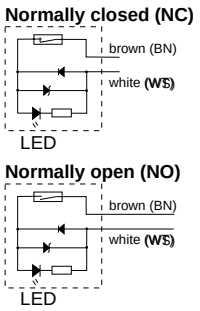

Dimensions (mm) – Type RS-K

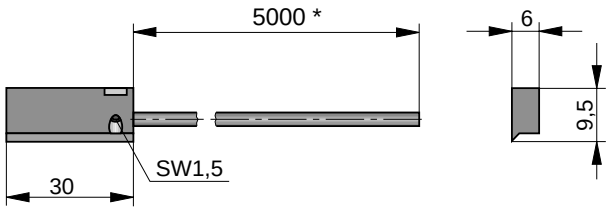

* Length with possible minus tolerance, see chart below

Electrical Connection, Type ES

Standard Version:
Type PNP

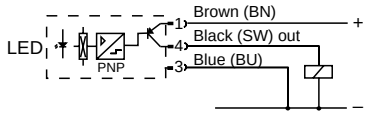

Optional Version
Type PNP

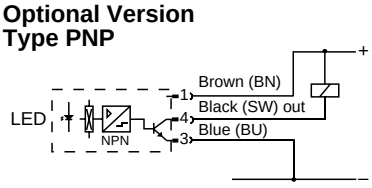

Dimensions (mm) – Type ES-S / RS-S*

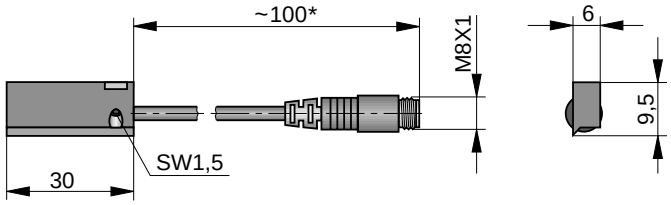

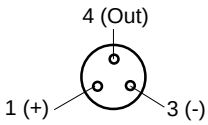

PIN assignment
(view of pins)
according to DIN EN 50044

* Length with possible minus tolerance, see chart below

Length of connection cable with length tolerance

Sensor Order No.	Nominal cable length	Length tolerance
KL3045	5000 mm	– 50 mm
KL3048	5000 mm	– 50 mm
KL3054	100 mm	– 20 mm
KL3060	100 mm	– 20 mm

Dimensions Series OSP-P10

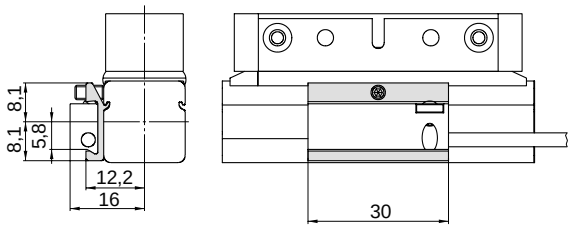

Note:
Sensors can not be mounted directly opposite of the carrier

Dimensions Series OSP-P16 to 80

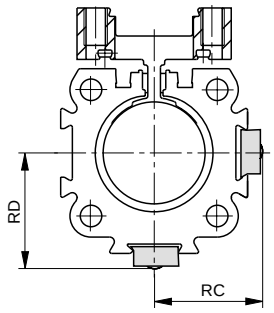

Dimension Table (mm) and Order Instructions

Series	Dimension		Order No.						
	RC	RD	RS closer Normally open	RS opener Normaly closed	ES PNP	NPN	ES compl. with 5 m cable PNP	NPN	Adapter (only for OSP-P10)
OSP-P10	–	–	**Type:**	**Type:**	**Type:**	**Type:**	**Type:**	**Type:**	**20968**
OSP-P16	20	20,5	**RS-K**	**RS-K**	**ES-S**	**ES-S**	**ES-S**	**ES-S**	**please order separately**
OSP-P25	25	27	**KL3045**	**KL 3048**	**KL 3054**	**KL 3060**	**10750**	**10751**	
OSP-P32	31	34							
OSP-P32	36	39							
OSP-P50	43	48							
OSP-P63	53	59							
OSP-P80	66	72							
Cable 5 m with connector and with open end for sensor Type ES-S / RS-S					**4041**				

ORIGA-SENSOFLEX
Displacement Measuring Systems for Cylinder Series OSP-P

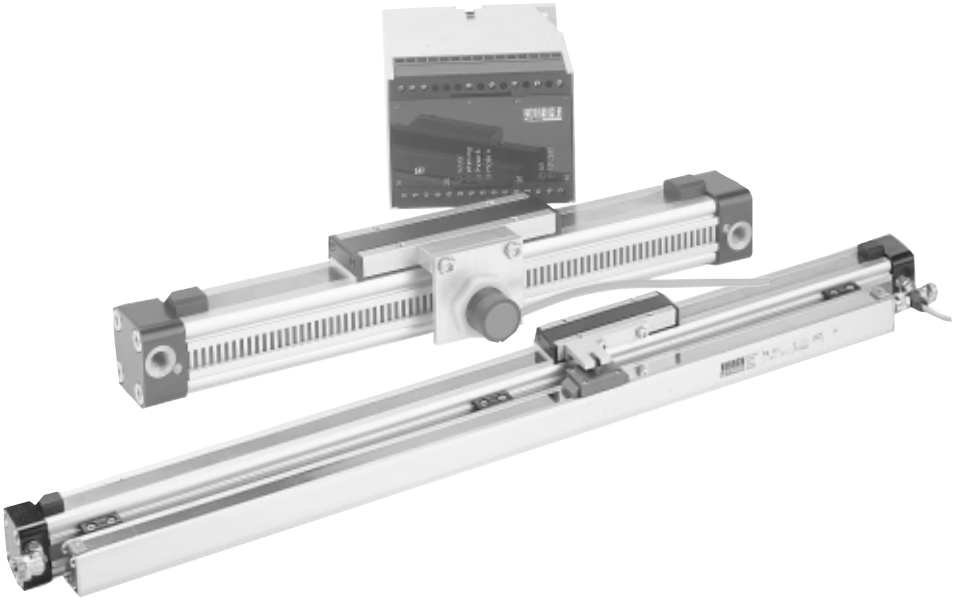

Contents

Description	Data Sheet No.	Page
Overview	1.50.001E	69-70
Technische Daten SFI	1.50.002E-1 to 3	71-73
Dimensions SFI	1.50.002E-2 to 4	72-74
Order Instructions SFI	1.50.002E-4	74
Technische Daten SFA	1.50.003E-1 to 2	75-76
Dimensions SFA	1.50.003E-2	76
Order Instructions SFA	1.50.003E-2	76

HOERBIGER-ORIGA GMBH · Südliche Römerstraße 15 · D-86972 Altenstadt · Tel. +49 +8861 221-0 · Fax +49 +8861 221-1305 · E-mail pneu@hoerbiger.de
HOERBIGER-ORIGA GMBH · Industriestr. 8 · D-70794 Filderstadt · Tel. +49 +7158 1703-0 · Fax +49 +7158 64870 · E-mail dmarket@hoerbiger-origa.com
HOERBIGER-ORIGA LTD. · Tewkesbury Industrial Estate · Tewkesbury GL 20 8 ND GB · Tel. +44 1684 85 00 00 · Fax +44 1684 85 05 55
E-mail sales@hoerbiger-origa.com
HOERBIGER-ORIGA Pneumatik GmbH · Dr. Alexander-Schärf-Straße 12 · A-2700 Wiener Neustadt · Tel. +43 +2622 26071-0 · Fax +43 +2622 26071-5
E-mail amarket@hoerbiger-origa.com
HOERBIGER-ORIGA AB · Kungsgatan 10, Box 67 · SE-73622 Kungsör · Tel. +46 227 411 00 · Fax +46 227 411 29 · E-mail semarket@hoerbiger-origa.com
Internet http://www.hoerbiger-origa.com

ORIGA-Sensoflex

Displacement measuring systems for automated movement

Series SFI

(incremental measuring system)

for cylinder series

- **OSP-P...**

Characteristics

- Contactless optical displacement measurement system (reflection-based)
- Unlimited displacement length
- Resolution to 1 mm
- Easy installation: self adhesive measuring scale, reader, encoder
- Displacement speed up to 7 m/s
- For linear and non-linear motion forms
- Suited for virtually all impulse recognition systems with counter input.

For further specifications, see 1.50.002E

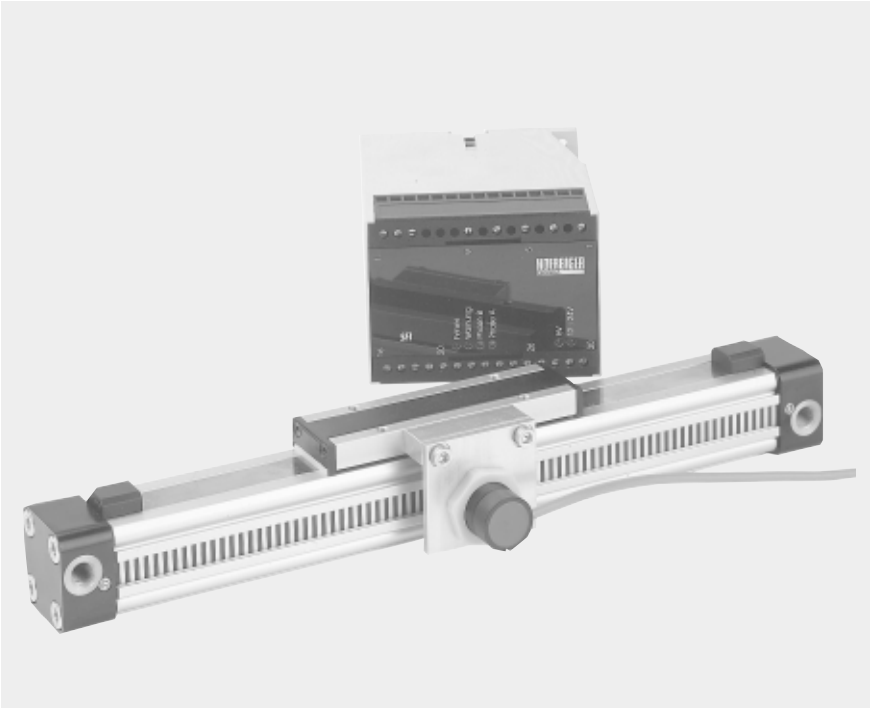

System SFI consists of 3 components

- **Measuring scale**
  Self adhesive polyester tape with 2 mm black/white increments
- **Sensing head**
  The sensing head converts the fluctuations in the reflections of the black/white increments into electrical signals, for further processing in additional counting equipment (e.g. PLC, PC, digital counter).
- **Encoder**
  Optional unit, that converts the signals from the sensing head into new signals (Modes). Three different Modes are available and digital outputs are provided.
  The encoder is also equipped with:
  - a digital input filter
  - a power supply for the sensing head
  - an extra signal output with RS 422 physical interface

A3P108E00KAA00X

Series SFA

(analogue displacement measuring system)

for cylinder series

- **OSP-P...**

Characteristics

- Measurement up to 4000 mm (stepless)
- Resolution infinitely accurate, typically 0.01 mm
- No moving energy supply
- Preservation of measuring value in case of loss of power.

For further specifications, see 1.50.003E

This analogue displacement measuring system is based on a conductive plastic potentiometer for the direct and absolute measurement of displacement in control, monitoring and measurement applications.
The system is simple, robust and insensitive to electrical or magnetic interference.

The right to introduce technical modifications is reserved

Displacement measuring system

for automated movement

ORIGA-Sensoflex

(incremental displacement measuring system)

Series SFI

for cylinder series

- **OSP-P...**

General

The optical displacement measuring system SFI consists of 3 components

- **Measuring scale**
  Self adhesive polyester tape with 2 mm black/white increments
- **Sensing head**
  The sensing head converts the fluctuations in the reflections of the black/white increments into electrical signals, for further processing in additional counting equipment (e.g. PLC, PC, digital counter)
- **Encoder**
  Optional unit, that converts the signals from the reader into new signals (Modes). Three different Modes are available and digital outputs are provided.
  The encoder is also equipped with:
  - a digital input filter
  - a power supply for the sensing head
  - an extra signal output with RS 422 physical interface

Characteristics

- Contactless optical displacement measurement system (reflection-based)
- Unlimited displacement length
- Resolution to 1 mm
- Easy installation: self adhesive measuring scale, sensing head, encoder
- Displacement speed up to 7 m/s
- For linear and non-linear motion forms
- Suited for virtually all impulse recognition systems with counter input.

Characteristics

Characteristics		Unit	Description
Measuring scale	Material		self adhesive polyester tape
	Bar-code		4 mm intervals between each black/white increment
	Linearity	mm	± 0.1 to 5 m length
	Measuring scale length	m	max. 50 per reel (reels can be linked)
	Width	mm	25 (pre-cut at 10 mm)
	Thickness	mm	0.1
Sensing head	Scanning method		opto-electronical, contactless, reflection-based
	Velocity	m/s	max. 7
	Electrical protection	IP	64
	Temperature range	°C	-20 to +50
	Relative humidity	%	10 – 95 (non condensating)
	Weight (Mass)	kg	0.17
	Connection		Cable 5.0 m length, fixed, open end, diameter: 4 x 0.20 mm²
	Voltage	V DC	Input: Ue = 12 to 24 Output: Open Collector
	Power consumption	W	max. 3.5
	Delivery includes		sensing head, incl. cable and 2 nuts
Encoder	Housing		for wall and rail mounting (35mm DIN-rail)
	Connection		terminal screws
	Voltage	V DC V AC	Input: 12 to 24 115, 230, 400
	Power consumption	W	max. 12
	Electrical protection	IP	20
	Temperature range	°C	0 to 50
	Relative humidity	%	10 – 80 (non condensating)

For **product group list** see 1.50.001E

A1P577E00KAA00X

The right to introduce technical modifications is reserved

Measuring scale

The measuring scale can be applied to virtually all smooth surfaces. The adhesive is water-, oil-, and grease resistant to a very high degree. For easy adjustment of the scale width, it has been pre-cut.

Dimensions (mm) – Measuring scale

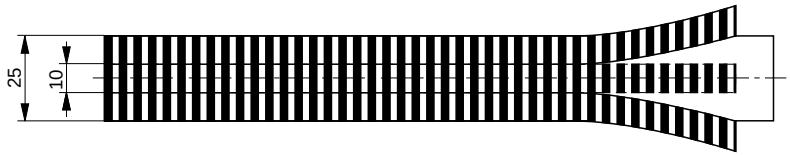

Sensing Head

The sensing head provides two pulsating, 90° out ot phase counter signals (phase A/B) with a 4mm resolution. External processing can improve the resolution to 1 mm. The counting direction can be determined automatically from the phase variance of the counter signals.

Dimensions (mm) – Sensing Head

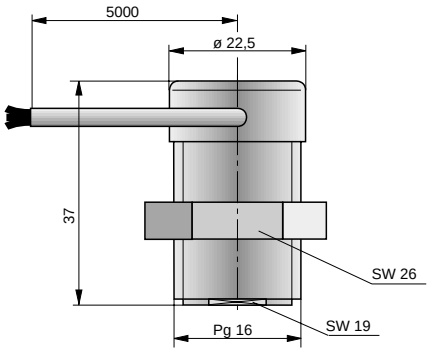

Connection diagram – Sensing head

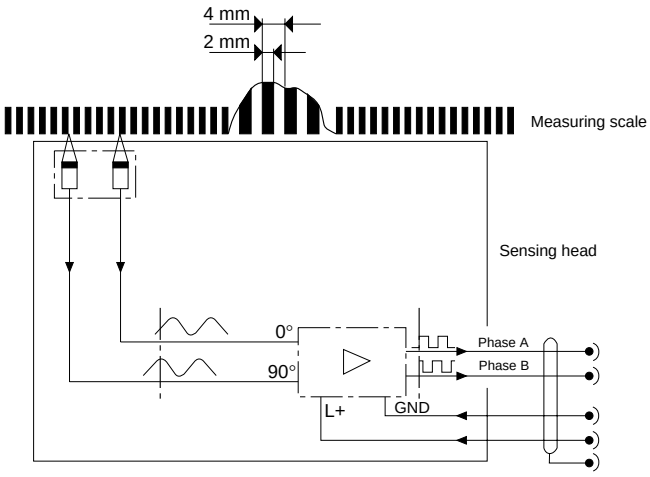

Output signal – Sensing head

$U_a = U_e$	Phase B	U_{a1}	0°	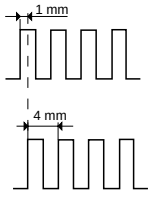
	Phase A	U_{a2}	90°	

Dimensions (mm) – Encoder

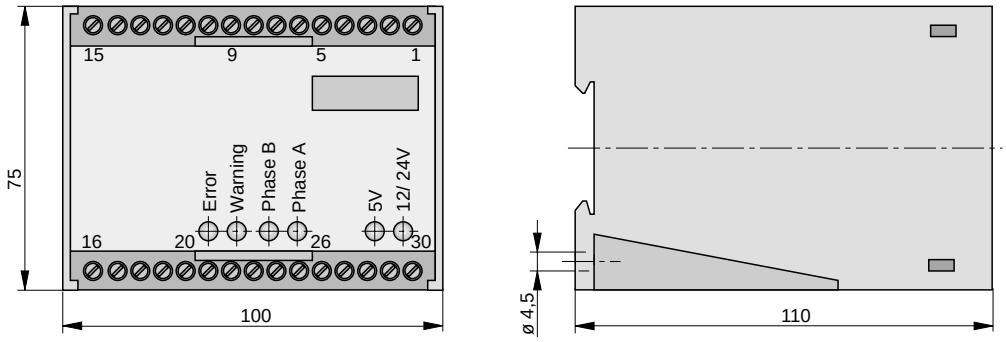

Output signal - Encoder

		Signal		Mode 1 Distance indicator		Mode 2 Impulse generator		Mode 3 Impulse generator	
Input	U_e	L+		12 – 24 V DC					
		GND		O V DC					
Output	U_a = 5 - 12 - 24 V DC	Phase A	U_{a1}	0°	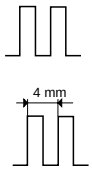	Direction	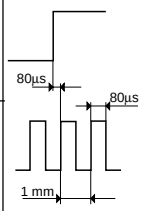	Count forward	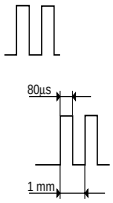
		Phase B	U_{a2}	90°		Count		Count backward	

Encoder

The encoder is an optional unit, that converts the signals from the sensing head into new signals (Modes). Three different Modes are available.

Mode 1 (Distance Indicator)
Just as in the sensing head, phase A and B provide two 90° out of phase counter signals, but the encoder has an additional digital filter.

Mode 2 (Impulse generator mode)
Phase A provides counter impulses with a length of +/- 80 µs („Count“). Internal signal processing renders a resolution of 1mm. Phase B gives a static High/Low signal for indication of the displacement direction.

Mode 3 (Impulse generator mode)
When counting upwards, phase A provides counter impulses with a length of 80 µs. Internal signal processing renders a resolution of 1 mm. Phase B gives a Low-signal. When changing direction, the signals of phases A and B are switched.

Two additional digital outputs are also available: ”Warning” and ”Error”, and it is possible to vary the output voltage.

- 5 V TTL / CMOS level
- 12 V / 24 V PLC level
- RS 422 level

SFI mounted on a rodless cylinder series OSP-P

The SFI system can be mounted directly on a rodless OSP-P cylinder with the special mounting kit.

Dimensions – in combination with OSP-P cylinders

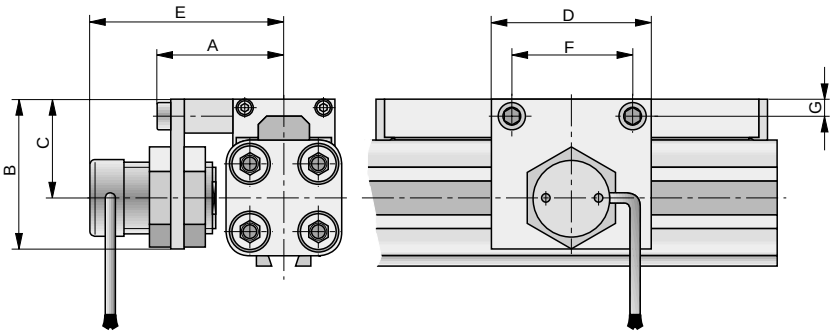

Dimensions (mm)

Series	A	B	C	D	E	F	G
OSP-P25	40	46.5	30.5	50	60	38	5.5
OSP-P32	45.5	53.5	37.5	50	66	38	6.5
OSP-P40	50.5	59.5	43.5	50	71	38	6.5
OSP-P50	60.5	64.5	48.5	50	78	38	6.5
OSP-P63	67.5	75	59	50	88	38	10.0
OSP-P80	81.5	75.5	91.5	50	101	38	12.0

Order instructions

Description	**Order No.**
Sensing head with measuring scale (please provide displacement length)	**20494**
Encoder	**20495**
Measuring scale per meter (spare part)	**4271**
Mounting kit for OSP-P25	**20426**
Mounting kit for OSP-P32	**20427**
Mounting kit for OSP-P40	**20428**
Mounting kit for OSP-P50	**20429**
Mounting kit for OSP-P63	**20771**
Mounting kit for OSP-P80	**20772**

Displacement measuring system

for automated movements

ORIGA-Sensoflex

(analogue displacement measuring system)

Series SFA

for cylinder series

- **OSP-P...**

Characteristics

- Stepless displacement length of up to 4000 mm
- Resolution infinitely accurate, typically 0.01 mm
- No moving power supply
- Preservation of measuring values in case of powerloss

This analogue displacement measuring system is based on a conductive plastic potentiometer for the direct and absolute measurement of displacement in control, monitoring and measurement applications.
The system is simple, robust and insensitive to electrical or magnetic interference.

General

Characteristics

- Displacement measuring system without propulsion rod
- Minimal space requirements through compact design and minimal dead stroke
- Pin for easy connection
- Assembly with mounting brackets

In spite of its high resolution, this analogue displacement measuring system is inexpensive and ideally suited for rough industrial use because of its robust design.
Easy handling and very low energy consumption make this system ideally suited for measuring, control and automation technology.
Basically, the SFA displacement measuring system functions as a voltage divider. A wiper is moved over a resistor, which in this modern system is a high-quality and robust conductive plastic layer.
This allows a high velocity and provides a very high resolution and a long life span.

Electrical connection

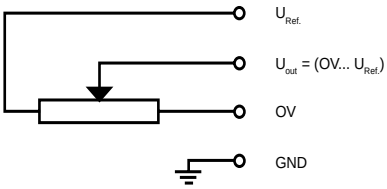

Assembly instructions

To achieve the linearity and life-span values specified in the technical data sheets, it is imperative that the wiper-voltage is read at a very low current (I < 10 µA). A higher current (I >10mA) would destroy the measuring system.

Characteristics

Characteristics	Unit	Description
General Features		
Measuring length		1-3000 mm stepless on request to 4000 mm
Life span		6000 km or 15 Million movements over ± 2 mm
Velocity	m/s	max. 1.5 *
Acceleration	m/s^2	max. 200
Actuating force	N	typ. 2
Repeatability	mm	± 0.02 (from one direction)
Reproducibility	mm	± 0.05 (from both directions)
Housing		anodized Aluminium
Weight (Mass)	kg/m	ca. 1.2
Temperature range	°C	-20 to +80
Relative humidity	%	10 to 95 (non condensating)
Electrical features		
Recommended wiper current	µA	0,1 – maximum wiper current 10 mA
Potentiometer voltage	V (DC)	max. 42
Recommended power	V (DC)	6.8 to 30
Connector		plastic elbow connector, cable 5mtr insulated, with open end
Temperature coefficient of the voltage divider ratio	ppm/°C	5
Enclosure class	IP	40
Signal output		potentiometric (voltage divider)
Insulation resistance	MΩ	10
Dielectric strength	V	500 eff

* higher speed decreases the life span

A1P562E00KAA00X

The right to introduce technical modifications is reserved

Electrical Measuring Range

Description	Measuring distance (mm) 125	150	300	600	1000	1500	1800	3000
Resistor value (kΩ) typical	2	5	5	5	10	10	20	20
Resistor tolerance (%)	± 40							
Independent linearity (%)	±0.09	±0.08	±0.07	±0.05	±0.04	±0.03	±0.03	±0.02

Dimensions (mm) – SFA with cylinder OSP-P

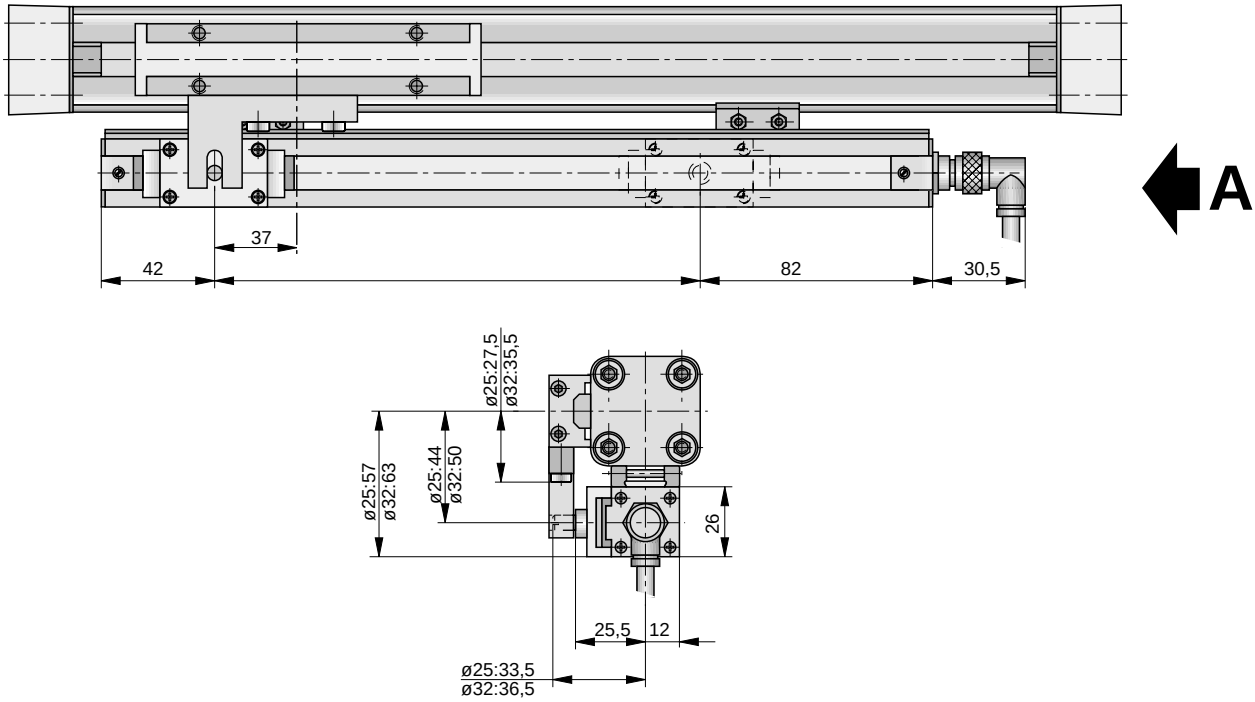

Order instructions

Description	Order-No.
SFA with measuring length of 1-3000 mm*, without Cable, for OSP-P25	**4650A**
SFA with measuring length of 1-3000 mm*, without Cable, for OSP-P32	**4650**
Mounting for OSP-P ø 25 mm (Coupling, mounting, cable)	**20430**
Mounting for OSP-P ø 32 mm (Coupling, mounting, cable)	**20431**
Cable 5 m	**4618**

***** (longer lengths on request)

ORIGA-SERVOTEC
Servo-Pneumatic Positioningsystem
Series OSP-P

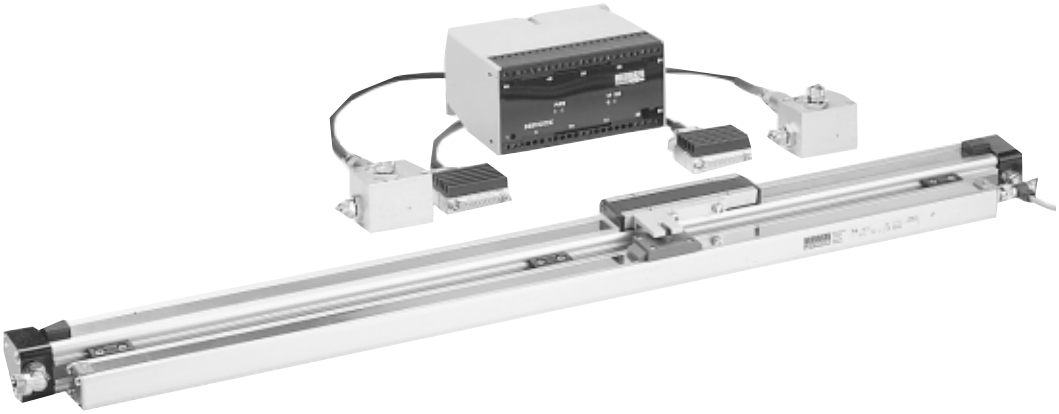

Contents

Description	Data Sheet No.	Page
Overview	1.55.001E	77-78
Technische Daten	1.55.002E-1	79
Dimensions	1.55.002E-2	80

HOERBIGER-ORIGA GMBH · Südliche Römerstraße 15 · D-86972 Altenstadt · Tel. +49 +8861 221-0 · Fax +49 +8861 221-1305 · E-mail preu@hoerbiger.de
HOERBIGER-ORIGA GMBH · Industriestr. 8 · D-70794 Filderstadt · Tel. +49 +7158 1703-0 · Fax +49 +7158 64870 · E-mail dmarket@hoerbiger-origa.com
HOERBIGER-ORIGA LTD. · Tewkesbury Industrial Estate · Tewkesbury GL 20 8 ND GB · Tel. +44 1684 85 00 00 · Fax +44 1684 85 05 55
E-mail sales@hoerbiger-origa.com
HOERBIGER-ORIGA Pneumatik GmbH · Dr. Alexander-Schärf-Straße 12 · A-2700 Wiener Neustadt · Tel. +43 +2622 26071-0 · Fax +43 +2622 26071-5
E-mail amarket@hoerbiger-origa.com
HOERBIGER-ORIGA AB · Kungsgatan 10, Box 67 · SE-73622 Kungsör · Tel. +46 227 411 00 · Fax +46 227 411 29 · E-mail semarket@hoerbiger-origa.com
Internet http://www.hoerbiger-origa.com

ORIGA-Servotec

Servo-pneumatic positioning system

Series SERVOTEC-

for cylinder series

- **OSP-P...**

Characteristics

- Stepless stroke lengths up to 3000 mm
- Reproducibility up to 0.1 mm/m
- Displacement speed up to 2.5 m/s
- Absolute measuring system

Modern positioning systems are expected to be exact and yet dynamic. The ORIGA SERVOTEC positioning system is an inexpensive alternative to electric positioning drives. In combination with commercially available industrial control systems, SERVOTEC enables the increasing number of positioning problems in the handling industry to be solved with servo-pneumatics at low cost.

For further specifications, see 1.55.002E

Controller in compact housing

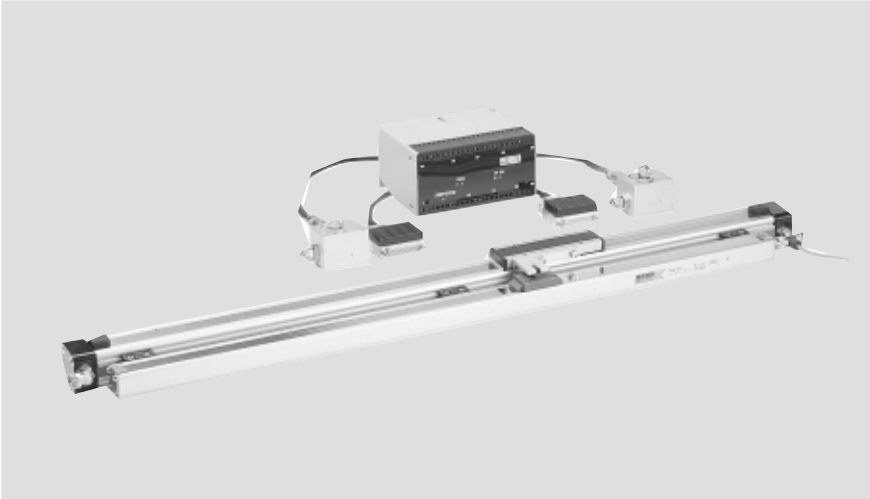

Actuator system (Cylinder, Measuring System, Servo Valves)

A3P109E00KAA00X

The right to introduce technical modifications is reserved

Positioning system

Servo-pneumatic

ORIGA-Servotec

Series SERVOTEC-

for Cylinder Series

• OSP-P...

Characteristics

- Stepless stroke lengths to 3000 mm
- Reproducibility up to 0.1 mm/m
- Displacement velocity up to 2.5 m/s
- Absolute measuring system

Pneumatic linear drives fitted with the SERVOTEC positioning system are compact and overload-proof and can be built into new or existing installations.
The SERVOTEC positioning controller can communicate with digital and analogue signals with almost any commercially available control system (PLC or PC).

General

Characteristics

- Binary and analogue control
- Positioning controller in compact housing
- For wall and rail mounting (35 mm DIN-rail)

Function

The constantly working, absolute measuring system senses the exact position of the cylinder piston. This signal is fed back to the position monitor of the controller, where the actual value is compared with a preset value. The deviations found are eliminated by the extremely fast servo-valves. With this constant electronic monitoring the cylinder piston is positioned within a very close range of tolerance.

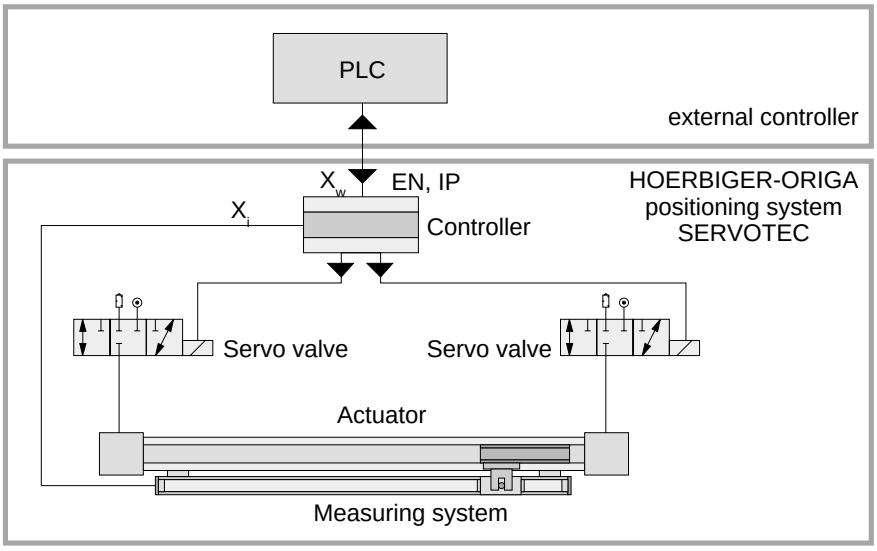

Characteristics

Characteristics	Unit	Description
General Features		
Cylinder diameter	mm	25, 32
Positionable stroke length	mm	0 – 3000
Velocity	mm/s	5 – 2500
Reproducibility max.	mm/m	± 0.1
Mounting		wall- or rail mounting (35 mm DIN-rail)
Temperature range	°C	0 – 50
Relative humidity	%	10 – 80 (non condensating)
Pneumatic		
Operating pressure range	bar	1 – 8
Electric		
Voltage – Controller	V (DC) V (AC)	24 (max. 50 W) 230 (10 VA)
Voltage – Control signals	V(DC)	analogue: 0–10/0 – 20mA (set value) binary: PLC-level (24 V DC) for Enable and In Position
Power consumption – Controller – Servo valves	VA W	10 2 x 25
Connection		terminal screws
Electrical protection	IP	42 (Controller IP 20)

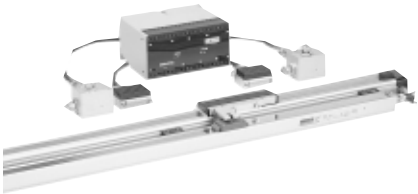

A1P562E00KAA00X

The right to introduce technical modifications is reserved

Dimensions
– Cylinder with external servo valves

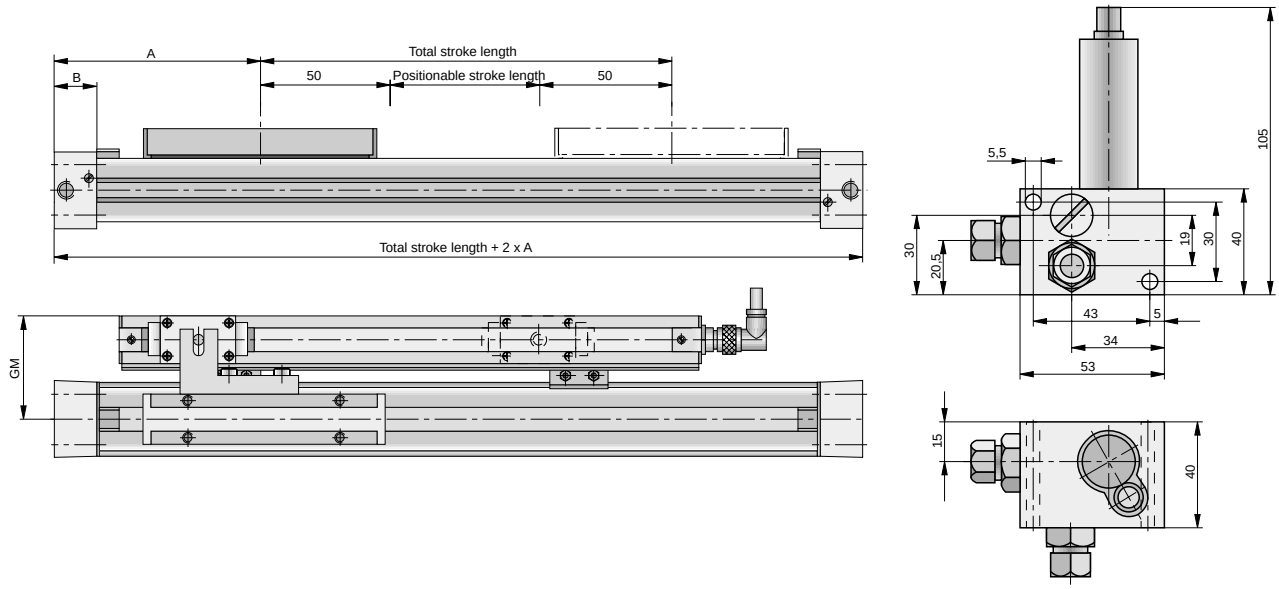

Note

- For physical reasons the first and last 50 mm of stroke shouldn't be positioned.
- Piston force, loads and dimensions are the same as those of the standard cylinders OSP-P (data sheet 1.10.002E) or with Linear Guides SL (data sheet 1.40.002E) and PS (data sheet 1.40.003E) and PL (data sheet 1.40.005E)

Dimensions (mm)

Cyl.ø	A	B	GM
25	100	22	57
32	125	25.5	63

Note:
To choose the rigth positioning actuator for your application, please contact your local sales engineer.

Assembly

- Suited for wall and rail mounting (35 mm DIN rail to EN 50022)
- Terminal screws (for 2 mm^2 diameter cable) are provided for the connection of the valves, the measuring system, and PLC.

Dimensions (mm)
– Positioning controller

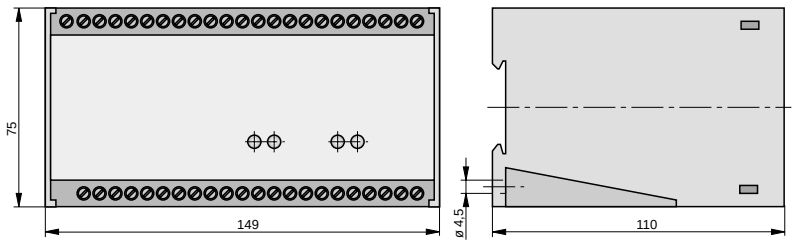

Delivery includes

The SERVOTEC system is delivered with the following components fully assembled:

Standard version

- Rodless cylinder for actuation
- Electronic controller
- Measuring system with cable
- Servovalves with cables and silencers
- Manual

ORIGA SYSTEM PLUS

Modular Electric Linear Drive Systems

HOERBIGER
ORIGA

Contents
Electric Linear Drive Systems

OSP
ORIGA
SYSTEM
PLUS

	Data Sheet	Page
Introduction – OSP Concept	1.01.015E	3
Modular Components Overview	1.01.016E	4-7
Applications for OSP-E Drives	1.01.016E	8-9
Belt-Driven		
– With Integrated Roller Guide Series OSP-E..BHD 25, 32, 50	1.15.001E 1.15.002E	11-14 15-20
– With Integral Guidance Series OSP-E..B 25, 32, 50	1.20.001E 1.20.002E	21-24 25-31
– For Synchronized Bi-Parting Movements Series OSP-E..BP 25, 32, 50	1.25.001E 1.25.002E	33-36 37-43
Ball-Screw-Driven		
– Series OSP-E..S 25, 32, 50	1.30.001E 1.30.002E	45-48 49-55
Trapezoidal Screw-Driven		
– Series OSP-E..ST 25, 32, 50	1.35.001E 1.35.002E	57-60 61-66
– With Extending Rod Series OSP-E..SR 25, 32, 50	1.35.010E 1.35.011E	67-70 71-74
Multi-Axis Connection System		
Overview	1.38.001E	75-78
Adapter Plates	1.38.002E	79-87
Profile Mountings	1.38.003E	89
Intermediate Drive Shaft	1.38.004E	90
Linear Guides		
Overview	1.40.020E	91-92
Plain Bearing Guide SLIDELINE	1.40.021E	93-94
Roller Guide POWERSLIDE	1.40.022E	95-97
Ball Bushing Guide GUIDELINE	1.40.023E	99-102
Aluminium-Roller Guide PROLINE	1.40.024E	103-105

	Data Sheet	Page
OSP – Accessories		
Overview	1.45.020E	107-108
Clevis Mounting	1.45.021E	109
End Cap Mounting	1.45.022E	111-113
Flange Mounting C	1.45.022E	114
Trunnion Mounting EN	1.45.022E	115
Pivot EL for Trunnion Mounting EN	1.45.022E	115
Mid-Section Support	1.45.023E	117-118
Inversion Mounting	1.45.025E	123
Mountings for Linear Drives fitted with OSP-Guides	1.45.024E	119-121
Adaptor Profile	1.45.026E	125
T-Nut Profile	1.45.027E	126
Motor Mountings		
– coupling housing for series OSP-E Belt	1.45.028E	127
– coupling housing and motor flange for series OSP-EBHD Belt	1.45.028E	128
– coupling housing for series OSP-E Ball Screw	1.45.029E	129
Piston Rod Mountings	1.45.030E	131-132
Proximity Sensors	1.45.101E	133-135
Electric Motors / Control Packages		
see Catalogue A4P019E		

HOERBIGER
ORIGA

ORIGA SYSTEM PLUS
– ONE CONCEPT
– THREE DRIVE OPTIONS

Based on the ORIGA rodless cylinder, proven in world wide markets, HOERBIGER-ORIGA now offers the complete solution for linear drive systems. Designed for absolute reliability, high performance, ease of use and optimised engineering the ORIGA SYSTEM PLUS satisfies even the most demanding applications.

ORIGA SYSTEM PLUS

is a totally modular concept which offers the choice of pneumatic or electric actuation, with guidance and control modules to suit the exact needs of individual installations.

The actuators at the core of the system all have a common aluminium extruded profile, with double dovetail mounting rails on three sides, these are the principle building blocks of the system to which all modular options are directly attached.

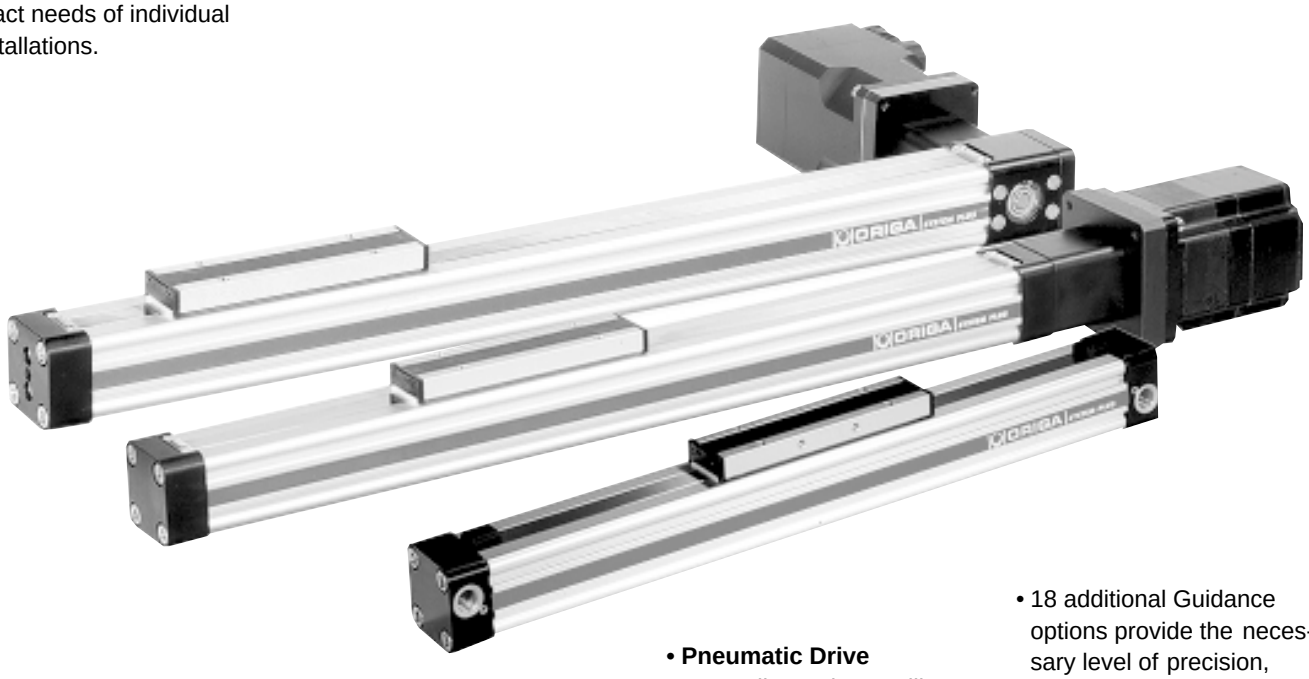

SYSTEM MODULARITY

- **Electric Screw Drive**
  – For high force capability and accurate path and position control.
- **Electric Belt Drive**
  – For high speed applications, accurate path and position control and longer strokes.
- **Pneumatic Drive**
  – For all round versatility and convenience, combining ease of control and broad performance capability. Ideally suited for point-to point operations, reciprocating movements and simple traverse / transfer applications.

For additional informations on pneumatic linear drives, please refer to catalogue A4 P011

- 18 additional Guidance options provide the necessary level of precision, performance and duty.
- Compact solutions, which are simple to install and can be easily retrofitted.
- Valves and control options can be directly mounted to the pneumatic actuator system.
- Diverse mounting options to provide total installation flexibility.

ORIGA SYSTEM PLUS
– ONE CONCEPT
– THREE DRIVE OPTIONS

***Information on Pneumatic Linear Drives, see Catalogue A4 P011**
****Information on Electric Motors and Control Packages, see Catalogue A4 P019**

Basic Linear Drive – Standard Version

- Series OSP-P (pneumatic)*
- Series OSP-E Belt, Belt Bi-parting, Belt with integrated Roller Guide
- Series OSP-E Screw (Ball Screw, Trapezoidal Screw)

Air Connection on the End-face or both at One End

- Series OSP-P (pneumatic)*

Integrated 3/2-Way Valves

- Series OSP-P (pneumatic)*

Clevis Mounting

- Series OSP-P (pneumatic)*
- Series OSP-E Belt
- Series OSP-E Screw

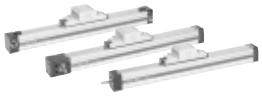

End Cap Mounting

- Series OSP-P (pneumatic)*
- Series OSP-E Belt
- Series OSP-E Screw

Mid-Section Support

- Series OSP-P (pneumatic)*
- Series OSP-E Belt
- Series OSP-E Screw

Inversion Mounting

- Series OSP-P (pneumatic)*
- Series OSP-E Belt
- Series OSP-E Screw

Multi-Axis Connection System

- Adapter Plates
- Intermediate Drive Shafts

Linear Guides – SLIDELINE

- Series OSP-P (pneumatic)*
- Series OSP-E Screw

Linear Guides – POWERSLIDE

- Series OSP-P (pneumatic)*
- Series OSP-E Belt
- Series OSP-E Screw

Linear Guides – GUIDELINE

- Series OSP-P (pneumatic)*
- Series OSP-E Belt
- Series OSP-E Screw

Linear Guides – PROLINE

- Series OSP-P (pneumatic)*
- Series OSP-E Belt
- Series OSP-E Screw

Brakes

- Active-Brakes*
- Passive-Brakes*

Proximity Sensors

- Series OSP-P (pneumatic)*
- Series OSP-E Belt
- Series OSP-E Screw

SENSOFLEX

- Displacement Measuring System*

SERVOTEC

- Servo Pneumatic Positioning System*

Electric Motors and Control Packages**

- Stepper Motor and Controller
- Servo Motor and Controller

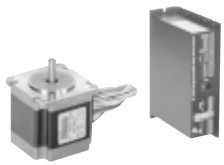

Electric Linear Drive Systems, Modular Components - Overview

Electric Linear Drive Systems, Modular Components - Overview

OSP ORIGA SYSTEM PLUS

Linear Drives	OSP-E25 -BHD [1])	OSP-E32 -BHD [1])	OSP-E50 -BHD [1])	OSP-E25 -B [2])	OSP-E32 -B [2])	OSP-E50 -B [2])	OSP-E25 -BP [3])	OSP-E32 -BP [3])	OSP-E50 -BP [3])	OSP-E25 -S [4])	OSP-E32 -S [4])	OSP-E50 -S [4])	OSP-E25 -ST [5])	OSP-E32 -ST [5])	OSP-E50 -ST[5])	OSP-E25 -SR [6])	OSP-E32 -SR [6])	OSP-E50 -SR [6])
Effective action force [N]	550-1070	1030-1870	1940-3120	50	100 - 150	300 - 425	50	100 - 150	300 - 425	250	600	1500	600	1300	2500	800	1600	3300
Velocity v [m/s]	10,0	10,0	10,0	2,0	3,0	5,0	2,0	3,0	5,0	0,25	0,5	2,5	0,1	0,1	0,15	0,075	0,1	0,125
Magnetic piston (three sides)	❑	❑	❑	❑	❑	❑	❑	❑	❑	❑	❑	❑	❑	❑	❑	❑	❑	❑ f
Free choice of stroke length[mm] ❊❊	100 - 7000	100 - 7000	100 - 7000	100 - 3000	100 - 5000	100 - 5000	100 - 1500 x 2	100 - 2500 x 2	100 - 2500 x 2	100 - 1100	100 - 2000	100 - 3200	100 - 1100	100 - 2000	100 - 2500	1 - 500	1 - 500	1 - 500
Temperature range [°C] ❊	- 30 – + 80	- 30 – + 80	- 30 – + 80	- 30 – + 80	- 30 – + 80	- 30 – + 80	- 30 – + 80	- 30 – + 80	- 30 – + 80	- 20 – + 80	- 20 – + 80	- 20 – + 80	- 20 – + 70	- 20 – + 70	- 20 – + 70	- 20 – + 70	- 20 – + 70	- 20 – + 70
Stainless steel parts	×	×	×	×	×	×	×	×	×	×	×	×	×	×	×	×	×	×
Tandem-Piston	❍	❍	❍	❍	❍	❍	❍	❍	❍	❍	❍	❍	❍	❍	❍	–	–	–
Self Guidance																		
L [N]	7200	8500	24600	160	300	850	160	300	850	500	1200	3000	500	1000	1500	–	–	–
M [Nm]	470	690	2400	12	25	80	12	25	80	12	25	80	24	65	155	–	–	–
Ms [Nm]	80	120	540	2	8	16	2	8	16	2	8	16	2	6	13	–	–	–
Mv [Nm]	470	690	2400	8	16	32	8	16	32	8	16	3	7	12	26	–	–	–
Slideline																		
L [N]	–	–	–	×	×	×	×	×	×	675	925	2000	675	925	2000	–	–	–
M [Nm)]	–	–	–	×	×	×	×	×	×	34	60	180	34	60	180	–	–	–
Ms [Nm]	–	–	–	×	×	×	×	×	×	14	29	77	14	29	77	–	–	–
Mv [Nm]	–	–	–	×	×	×	×	×	×	34	60	180	34	60	180	–	–	–
Proline																		
L [N]	–	–	–	1060	1460	3890	1060	1460	3890	1060	1460	3890	1060	1460	3890	–	–	–
M [Nm)]	–	–	–	55	91	313	55	91	313	55	91	313	55	91	313	–	–	–
Ms [Nm]	–	–	–	18	36	139	18	36	139	18	36	139	18	36	139	–	–	–
Mv [Nm]	–	–	–	55	91	313	55	91	313	55	91	313	55	91	313			
Powerslide																		
L [N]	–	–	–	910 - 1190	1400 - 2300	3000 - 4000	910 - 1190	1400 - 2300	3000 - 4000	910 - 1190	1400 - 2300	3000 - 4000	900 - 1190	1400 - 2300	3000 - 4000	–	–	–
M [Nm]	–	–	–	63 - 175	70 - 175	250 - 350	63 - 175	70 - 175	250 - 350	63 - 175	70 - 175	250 - 350	63 - 175	70 - 175	250 -350	–	–	–
Ms [Nm]	–	–	–	14 - 20	20 - 50	90 - 140	14 - 20	20 - 50	90 - 140	14 - 20	20 - 50	90 - 140	14 - 20	20 - 50	90 - 140	–	–	–
Mv [Nm]	–	–	–	63 - 175	70 - 175	250 - 350	63 - 175	70 - 175	250 - 350	63 - 175	70 - 175	250 - 350	63 - 175	70 - 175	250 - 350	–	–	–
Guideline																		
L [N]	❍	❍	❍	1650 - 2500	1650 - 2500	4400 - 8000	1650 - 2500	1650 - 2500	4400 - 8000	1650 - 2500	1650 - 2500	4400 - 8000	1650 - 2500	1650 - 2500	4400 - 8000	–	–	–
M [Nm]	❍	❍	❍	115	145	500	115	145	500	115	145	500	115	145	500	–	–	–
Ms [Nm]	❍	❍	❍	75	90	375	75	90	375	75	90	375	75	90	375	–	–	–
Mv [Nm]	❍	❍	❍	90	115	355	90	115	355	90	115	355	90	115	355	–	–	–
Guideline with shock absorber for cushioning	❍	❍	❍	❍	❍	❍	❍	❍	❍	❍	❍	❍	❍	❍	❍	–	–	–
Active-Brake																		
Braking force at 6 bar (Brake surface dry) [N]	×	×	×	❍	❍	❍	❍	❍	❍	❍	❍	❍	❍	❍	❍	–	–	–
Slideline SL / Proline PL with Brakes																		
Active-Brake																		
Braking force at 6 bar (Brake surface dry) [N]	×	×	×	❍	❍	❍	❍	❍	❍	❍	❍	❍	❍	❍	❍	–	–	–
Passive-Brake Multibrake																		
Brake force (no pressure, Brake surface dry) [N]	×	×	×	❍	❍	❍	❍	❍	❍	❍	❍	❍	❍	❍	❍	–	–	–
Accessories																		
Proximity Sensors																		
RS (closer, opener)	❍	❍	❍	❍	❍	❍	❍	❍	❍	❍	❍	❍	❍	❍	❍	❍	❍	❍
Electronic Sensor ES (PNP, NPN)	❍	❍	❍	❍	❍	❍	❍	❍	❍	❍	❍	❍	❍	❍	❍	❍	❍	❍
Displacement measuring systems																		
SFI - incremental	❍	❍	❍	❍	❍	❍	❍	❍	❍	❍	❍	❍	❍	❍	❍	–	–	–
SFA - absolute	❍	❍	❍	❍	❍	❍	❍	❍	❍	❍	❍	❍	❍	❍	❍	–	–	–
Motor package (stepper/servo)	❍	❍	❍	❍	❍	❍	❍	❍	❍	❍	❍	❍	❍	❍	❍	❍	❍	❍
Gearbox (integrated planetary gearbox))	❍	❍	❍	–	–	–	–	–	–	–	–	–	–	–	–	–	–	–
Mountings																		
Clevis Mounting	×	×	×	❍	❍	❍	❍	❍	❍	❍	❍	❍	❍	❍	❍	–	–	–
End Cap Mounting / Mid-Section support	❍	❍	❍	❍	❍	❍	❍	❍	❍	❍	❍	❍	❍	❍	❍	❍	❍	❍
Inversion Mounting	×	×	×	❍	❍	❍	❍	❍	❍	❍	❍	❍	❍	❍	❍	–	–	–
Adapter Profile / T-Nut Profile	❍	❍	❍	❍	❍	❍	❍	❍	❍	❍	❍	❍	❍	❍	❍	❍	❍	❍
Multi-Axis Connection System																		
Adapter Plates	❍	❍	❍	❍	❍	❍	❍	❍	❍	❍	❍	❍	❍	❍	❍	❍	❍	❍
Intermediate Drive Shafts	❍	❍	❍	❍	❍	❍	❍	❍	❍	❍	❍	❍	❍	❍	❍	❍	❍	❍
Special Drives																		
Cleanroom	×	×	×	×	×	×	×	×	×	×	×	×	×	×	×	×	×	×

❑ = Standard version
❍ = Option
× = Currently not available
❊ = other Temperature ranges on request
❊❊ = other stroke length on request

[1]) = Electric Linear Drive (Belt, with integrated Roller Guide) – Option: Bi-parting
[2]) = Electric Linear Drive (Belt)
[3]) = Electric Linear Drive (Belt Bi-parting)
[4]) = Electric Linear Drive (Ball Screw)
[5]) = Electric Linear Drive (Trapezoidal Screw)
[6]) = Electric Linear Drive (Trapezoidal Screw with extending Rod)

A COMPLETE SYSTEM – SIX DRIVE OPTIONS FOR ALL REQUIREMENTS

Belt-Driven with Integrated Roller Guide
Series OSP-E..BHD

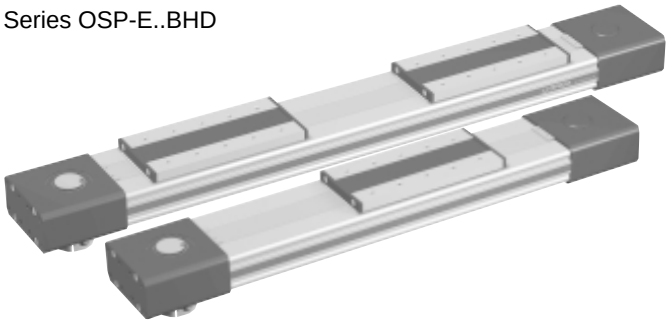

Belt-Driven with Integral Guidance
Series OSP-E..B

Bi-Parting Belt-Driven
for perfectly synchronized bi-parting movements
Series OSP-E..BP

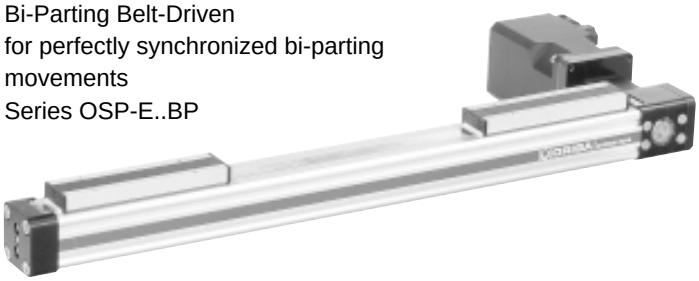

Ball Screw-Driven
Series OSP-E..S

Trapezoidal Screw-Driven
with extending rod
Series OSP-E..SR

Trapezoidal Screw-Driven
Series OSP-E..ST

STANDARD VERSIONS, OPTIONS AND ACCESSORIES

Description	Belt-Driven – Basic Versions		
	Belt-Driven with Integrated Roller Guide 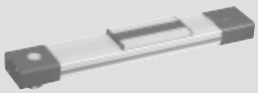	Belt-Driven 	Bi-Parting Belt-Driven
Standard Versions	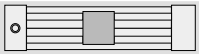		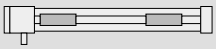
Options	– Bi-Parting – Integrated Planetary Gearbox – Actuating Direction – Drive Shaft Options	– Drive Shaft Options	– Drive Shaft Options
Mountings			
Clevis Mounting	–	O	O
End Cap Mounting	O	O	O
Mid-Section Support	O	O	O
Inversion Mounting	–	O	O
Accessories			
Proximity Sensors	O	O	O
Motor Mountings	O	O	O
Linear Guides	O	O	O
Multi-Axis Connection System	O	O	O

Description	Screw-Driven – Basic Versions		
	Ball Screw -Driven 	Trapezoidal Screw- Driven 	Trapezoidal Screw- Driven with extending Rod
Standard Versions			
Options	– Pitch options	–	– Flange Mounting – Trunnion Mounting – Piston Rod Mountings
Mountings			
Clevis Mounting	O	O	–
End Cap Mounting	O	O	O
Mid-Section Support	O	O	O
Inversion Mounting	O	O	–
Accessories			
Proximity Sensors	O	O	O
Motor Mountings	O	O	O
Linear Guides	O	O	–
Multi-Axis Connection System	O	O	O

APPLICATION EXAMPLES FOR ELECTRIC LINEAR DRIVE SYSTEMS

Auto Handling
- high speed pick and place movements

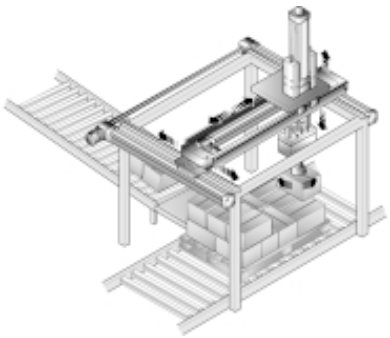

Material Handling Systems
- vertical and horizontal transfer movements

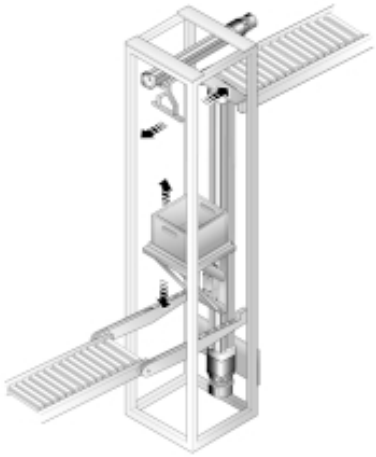

Punching Machines
– accurate feeding and postioning

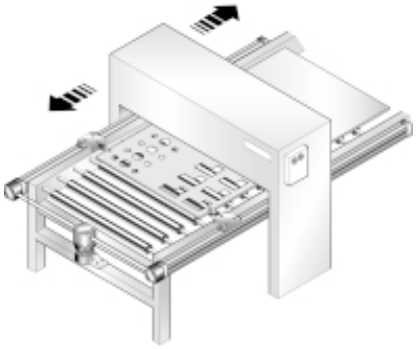

Mechanical Handling
- parallel operation of actuators on a vertical handling system

Profile Cutting Machines
- intricate profile movements of water jets and lasers

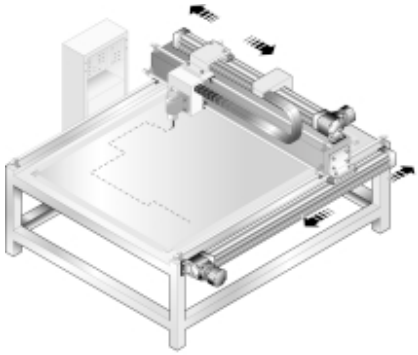

Slitting Machines
- high speed traverse applications for the slicing of papers and textiles

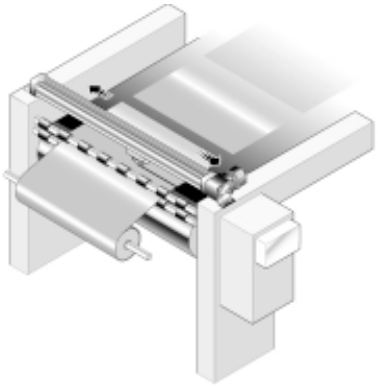

Spray Coating
- synchronized high speed bi-parting movements

Automatic Doors and Guards
- simple bi-parting operation

Automated Filling Machines
- accurate 3-axis positioning

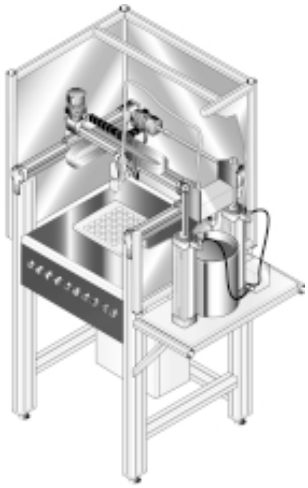

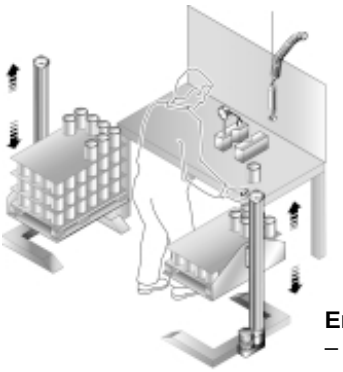

Ergonomic Workstations
– adjustment of working levels

Robotic Installations
- traverse of robots between work stations

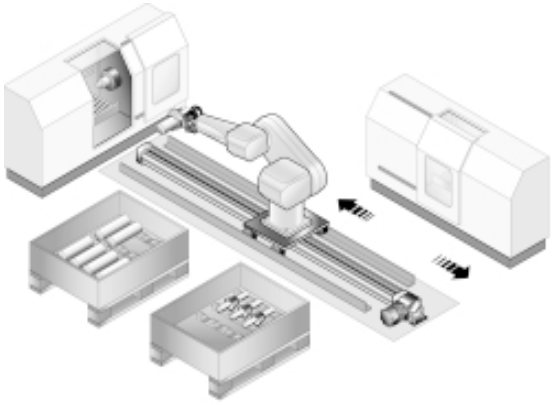

Milling Machines
- precise slow speed feeding in 2-axis

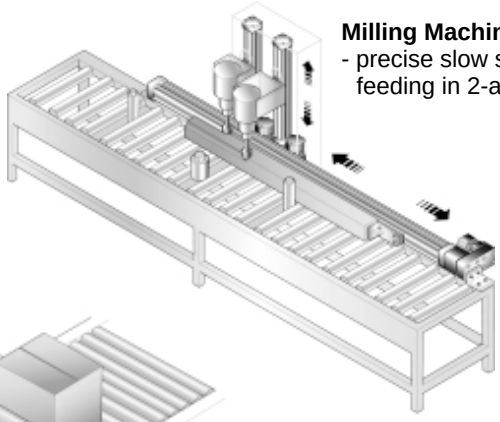

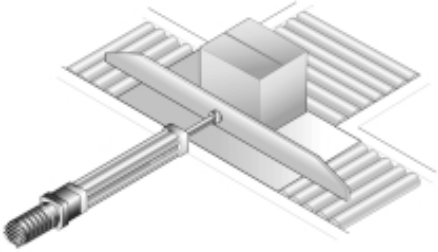

Conveyor Systems
- simple cross-transfer actuators

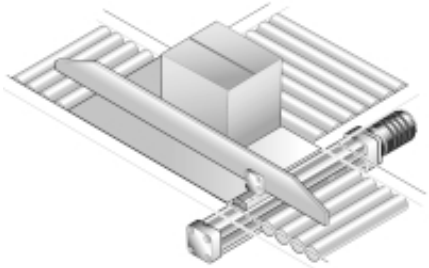

Spraying Equipment
- precision reciprocating action

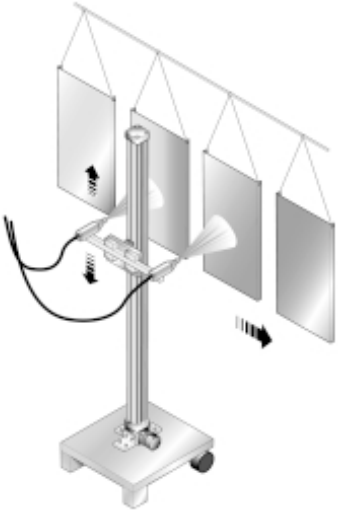

Measuring Systems
- optical curvature gauging using syncronised bi-parting actuation

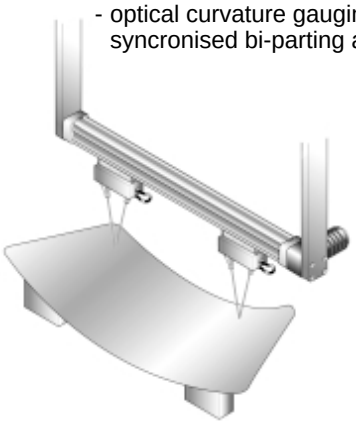

Ventilation Systems
- adjustment of air dampers

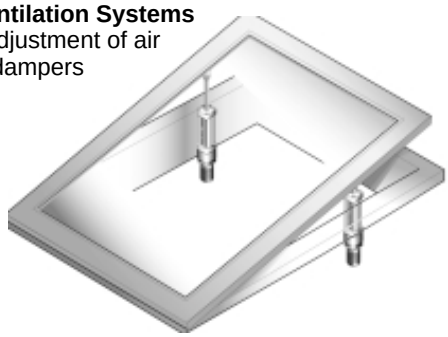

Mobile Lifting Systems
- lifting devices for industrial safety

Medical Equipment
- adjustment of orthopaedic beds

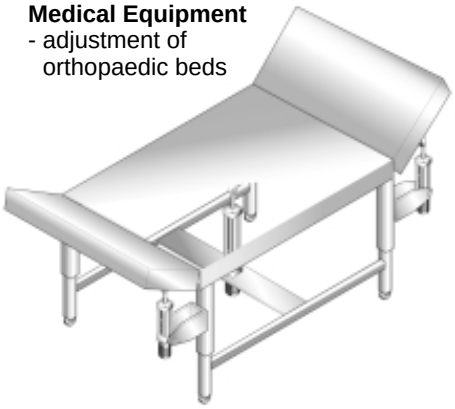

Conveyor Systems
- centring of packages on conveyor lines

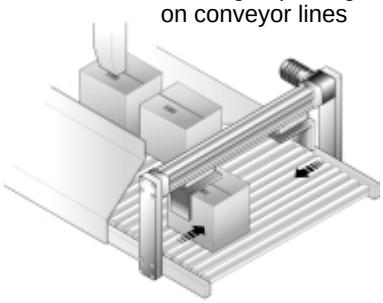

Linear Actuator with Toothed Belt and Integrated Roller Guide Series OSP-E..BHD

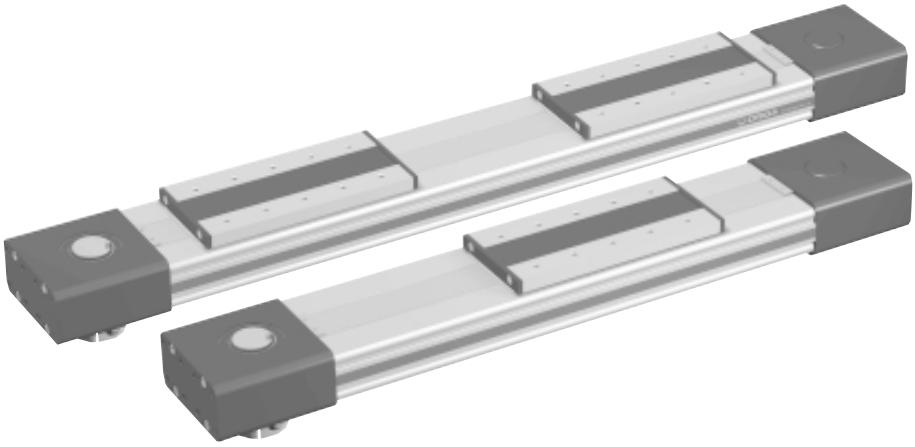

Contents

Description	Data Sheet No.	Page
Overview	1.15.001	11-14
Technical Data	1.15.002-1 to 3	15-17
Dimensions	1.15.002-4 to 5	18-19
Order Instructions	1.15.002-6	20

The System Concept

ELECTRIC LINEAR ACTUATOR FOR HEAVY DUTY APPLICATIONS

The latest generation of high capacity linear drives, the OSP-E..BHD series combines robustness, precision and high performance. The aesthetic design is easily integrated into machine constructions by virtue of extremely adaptable mountings.

Linear Actuator with Toothed Belt and Integrated Roller Guide

Advantages:
- Accurate path and position control
- High force output
- High speed operation
- High load capacity
- Easy installation
- Low maintenance
- Ideal for multi-axis applications

Features:
- Integrated roller guide
- Complete motor and control packages
- Optional integrated planetary gearbox
- Diverse range of multi-axis connection parts
- Diverse range of accessories and mountings
- Special options available

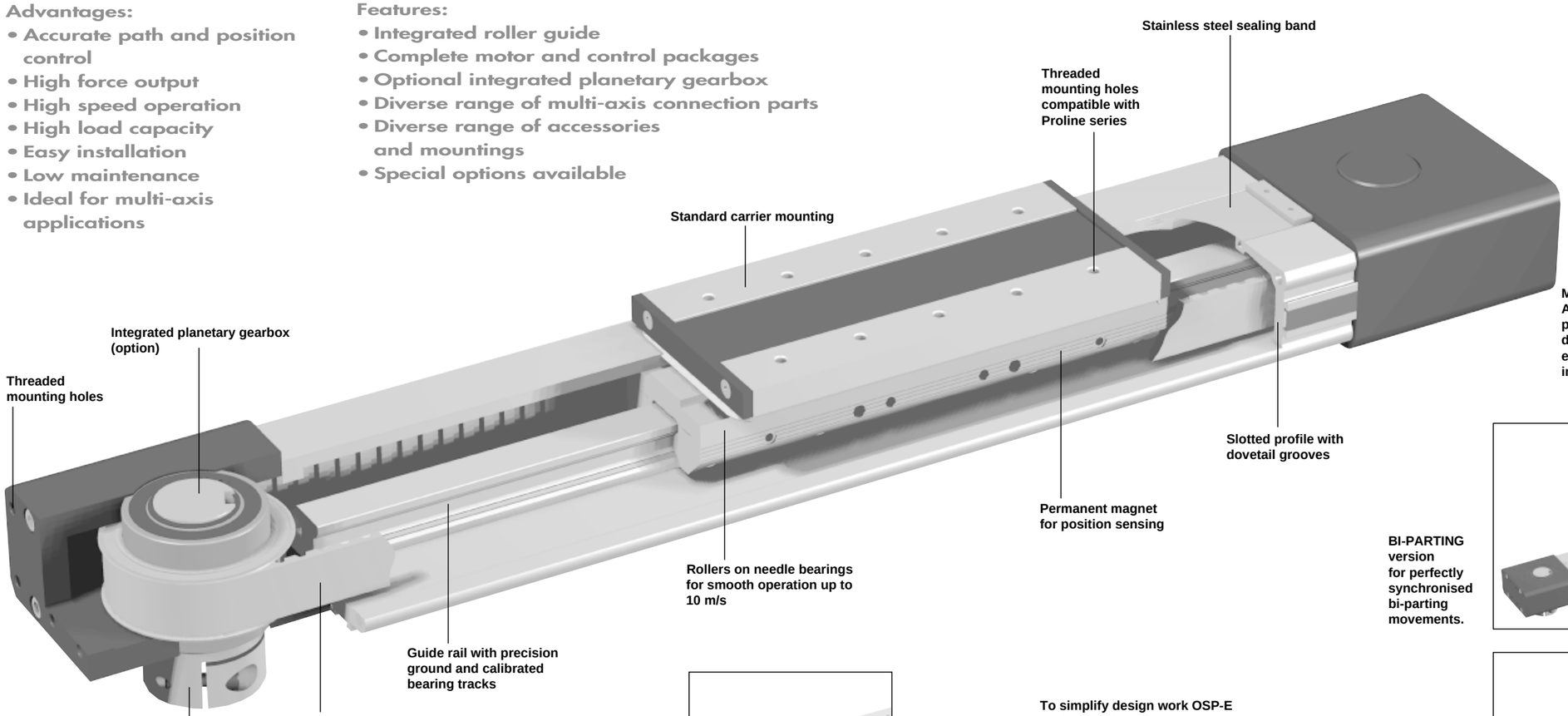

Hollow shaft with keyway (option)

Optional Integrated PLANETARY GEARBOX
- Highly compact and rigid solution fully integrated in the drive end housing
- Purpose designed for the BHD series
- Available with three standard ratios (3, 5 and 10)
- Very low backlash
- A wide range of available motor flanges

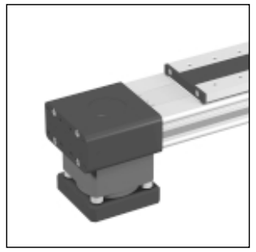

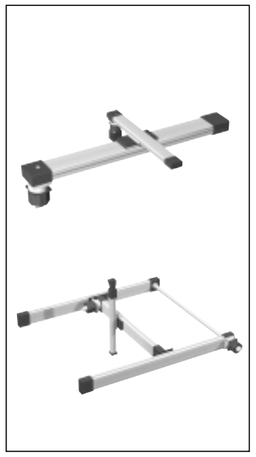

MULTI-AXIS
A wide range of adapter plates and intermediate drive shafts simplify engineering and installation

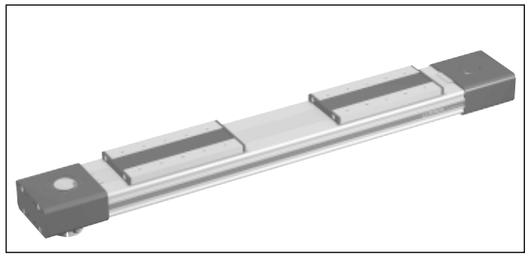

BI-PARTING version for perfectly synchronised bi-parting movements.

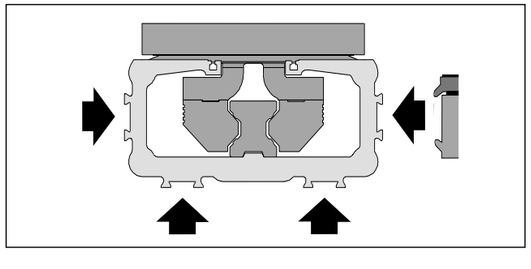

To simplify design work OSP-E system CAD files are available, which are compatible with most common CAD systems.

The dovetailed mounting rails of the new linear actuator expand its function into that of a universal system carrier. Modular system components are simply clamped on.

OPTIONS AND ACCESSORIES

SERIES OSP-E, BELT DRIVE WITH INTEGRATED ROLLER GUIDE

STANDARD VERSIONS OSP-E..BHD

Data sheets 1.15.002E-1, -2

Standard carrier with integrated roller guide. Dovetail profile for mounting of accessories and the actuator itself.

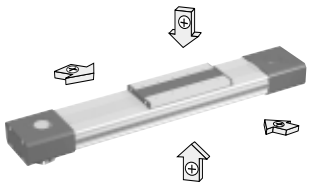

BASIC ACTUATOR OPTIONS

BI-PARTING VERSION
Data sheet 1.15.002E
For perfectly synchronised bi-parting movements.

DRIVE SHAFT OPTIONS
ACTUATING DIRECTION
Important in parallel operations, e.g. with intermediate drive shaft

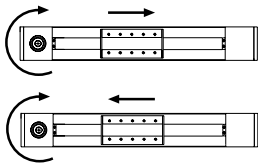

(Standard)

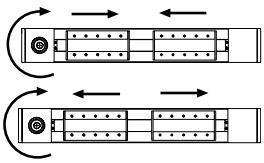

(Standard – bidirektionale Ausführung)

INTEGRATED PLANETARY GEARBOX

Data sheet 1.15.002E-5
For required torque and speed reduction

CLAMP SHAFT WITH CONNECTION SHAFT
For connection to intermediate drive shaft (se data sheet 1.38.004E)

HOLLOW SHAFT WITH KEYWAY
For close coupling of motors and external gears

ACCESSORIES

END CAP MOUNTING
Data sheet 1.45.022E
For mounting the drives on the end cap

MID-SECTION SUPPORT

Data sheet 1.45.023 E
For supporting long actuators or mounting the actuator on dovetail grooves.

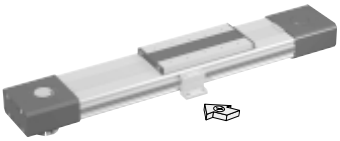

PROXIMITY SENSOR
SERIES RS AND IS

Data sheet 1.45.101E
For electrical sensing of end of stroke and intermediate carrier positions.

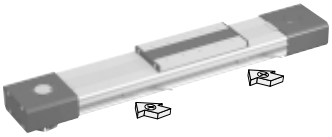

MOTOR MOUNTINGS

Data sheet 1.45.0028E
For linear drive with clamp shaft

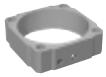

MULTI-AXIS CONNECTIONS

Data sheet 1.38.001E

For connection of linear drives in multi-axis systems. Carrier to carrier or carrier to profile and intermediate drive shafts for parallel drive arrangements are available.

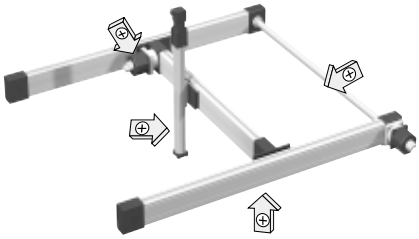

A3P106E00DZ50X

The right to introduce technical modifications is reserved

Linear Actuator with Toothed Belt

and Integrated Roller Guide

Series OSP-E..BHD
Size 25, 32, 50

OSP
ORIGA SYSTEM PLUS

Characteristics

Characteristics		Symbol	Unit	Description
General Futures				
Type				Belt-Driven Linear Actuator with integrated roller guide
Series				OSP-E..BHD / OSP-E..BHD-BP
Mounting				See drawings
Ambient Temperature range		ϑ_{min} ϑ_{max}	°C °C	-30 +80
Weight (mass)			kg	See table
Installation				In any position
Material	Slotted profile			Extruded anodized aluminium
	Toothed belt			Steel-corded polyurethane
	Belt wheels			Aluminium
	Rails			Aluminium
	Tracks			High alloy spring steel
	Roller casettes			Roller bearing steel in aluminium casing
	Sealing band			Hardened stainless steel
	Screws, nuts			Zinc plated steel
	Mountings			Zinc plated steel and aluminium
Encapsulation class			IP	54

Weight (mass) kg and Inertia

Series	Weight (mass) [kg]			Inertia [x 10^{-6} kgm²]	
	At stroke 0 m	Add per metre stroke	Moving mass	At stroke 0 m	Add per metre
OSP-E25BHD	3.8	4.3	1.0	984	197
OSP-E32BHD	7.7	6.7	1.9	3498	438
OSP-E50BHD	22.6	15.2	4.7	19690	1489
OSP-E25BHD-BP	5.7	4.3	2.0	1805	197
OSP-E32BHD-BP	11.3	6.7	3.8	6358	438
OSP-E50BHD-BP	31.7	15.2	9.4	34274	1489

Standard Versions:

- Standard carrier with integrated roller guide
- Dovetail profile for mounting of accessories and the actuator itself
- Clamp shaft

Special Versions:

- Bi-parting version for synchronised movements (OSP-E..BHD -BP).
- Integrated planetary gearbox.
- Drive shaft / Actuating direction
- Clamp shaft with connection shaft (for use in Multi-Axis systems with intermediate drive shaft)
- Hollow shaft with keyway

Installation Instructions

Use the threaded holes in the end cap for mounting the linear actuator. Check if mid-section supports are needed using the maximum allowable un-supported length graph on data sheet 1.15.002E-3.
At least one end cap must be secured to prevent axial sliding when mid-section support is used.

Maintenance

All moving parts are life time lubricated. We recommended a check of the linear actuator after an operation time of 4000 hours of operation or 3000 km, depending on the type of application. Please see separate instructions.

Start Up

The products in this data sheet should not be operated until the machine/ application in which they are used has passed necessary inspection.

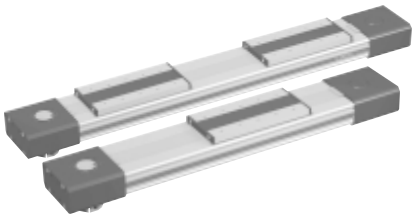

For **Proximity Sensors** see 1.45.101E
For **Mountings and Accessories** see 1.45.001E to 028E
For **Multi-Axis Connections** see 1.38.001E

HOERBIGER ORIGA

A1P559E00DZ00X

The right to introduce technical modifications is reserved

Sizing of the Linear Actuator

The following steps are recommended:

1. Calculate the static and the dynamic moments [Nm] created by the load **L** [N**]**, the distance **r** [m] and the acceleration **a** [m/s²] in all directions (M, M_s and M_v) according to the figure below.
2. Make a preliminary choice and get the calculation factors from the table.
3. Calculate the equivalent load F

   $$F = L \cdot (1 + a \cdot k_1) + C \cdot (M \cdot k_2 + M_s \cdot k_3 + M_v \cdot k_4)$$

   The service life exceeds 8 000 km if $F \leq C_o/6$. If $F > C_o/6$, check the equivalent service life in the graph and if it is too low, overview the moving profile or select a bigger unit.
4. Check maximum allowable torque on the drive shaft (pay attention to the note under the table).
   If the value is lower than required, overview the moving profile or select if possible a bigger unit.
5. Before sizing and specifying the motor, the rms torque must be calculated using the cycle time of the application.
6. Check that maximum allowable unsupported length is not exceeded (see data sheet 1.15.002E-3).

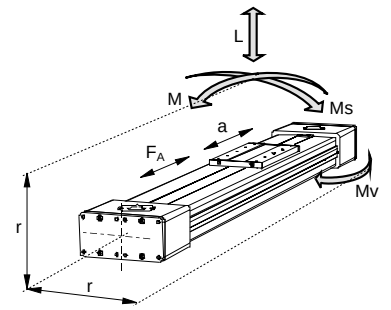

$M = F \cdot r$

Bending moments are calculated from the centre of the linear actuator and F indicates actual force

$M = M_{stat} + M_{dyn}$

$M_s = M_{s,\,stat} + M_{s,\,dyn}$

$M_v = M_{v,\,stat} + M_{v,\,dyn}$

Performance Overview

Characteristics		Unit	Description		
Series			**OSP-E25BHD**	**OSP-E32BHD**	**OSP-E50BHD**
Max. speed		[m/s]	10	10	10
Linear motion per revolution, drive shaft		[mm]	180	240	350
Max. rpm, drive shaft		[min⁻¹]	3000	2500	1700
Max. effective	< 1 m/s:	[N]	1070	1870	3120
action force	1-3 m/s:	[N]	890	1560	2660
F_A at speed*	> 3-10 m/s:	[N]	550	1030	1940
No-load torque		[Nm]	1.2	2.2	3.2
Max. acceleration/deceleration		[m/s²]	40	40	40
Repeatability		[mm/m]	±0.05	±0.05	±0.05
Max. standard stroke length		[m]	7	7	7

Maximum Allowable Torque on Drive Shaft vs Speed and Stroke

OSP-E25BHD				OSP-E32BHD				OSP-E50BHD			
Speed [m/s]	Torque [Nm]	Stroke [m]	Torque [Nm]	Speed [m/s]	Torque [Nm]	Stroke [m]	Torque [Nm]	Speed [m/s]	Torque [Nm]	Stroke [m]	Torque [Nm]
1	31	1	31	1	71	1	71	1	174	1	174
2	28	2	31	2	65	2	71	2	159	2	174
3	25	3	31	3	59	3	60	3	153	3	138
4	23	4	25	4	56	4	47	4	143	4	108
5	22	5	21	5	52	5	38	5	135	5	89
6	21	6	17	6	50	6	32	6	132	6	76
7	19	7	15	7	47	7	28	7	126	7	66
8	18			8	46			8	120		
9	17			9	44			9	116		
10	16			10	39			10	108		

Note: **Max. torque is the lowest value of speed or stroke related torque value.**
Example above: OSP-E25BHD-stroke 5 m, required speed 3 m/s; speed 3 m/s gives 25 Nm and stroke 5 m gives 21 Nm. Max. torque for this application is 21 Nm.
When sizing Bi-parting units the stroke is the ordering stroke, see data sheet 1.15.002E-4.

Calculation Factors

Series	C_O	C	k_1 [s²/m⁻¹]	k_2 [m⁻¹]	k_3 [m⁻¹]	k_4 [m⁻¹]
OSP-E25BHD	7 200	5 900	0.0429	0.00256	0.01538	0.00256
OSP-E32BHD	8 500	6 700	0.0458	0.00185	0.01111	0.00185
OSP-E50BHD	24 600	18 700	0.0557	0.00054	0.00244	0.00054

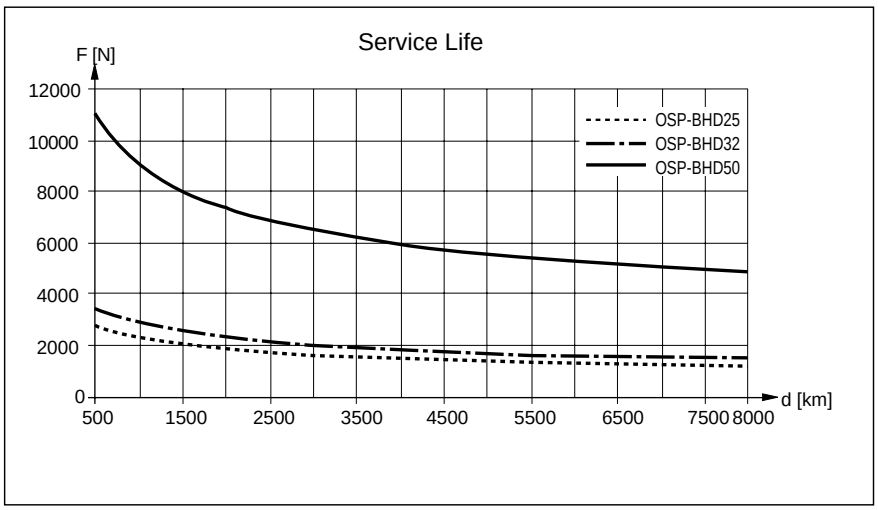

Maximum Allowable Unsupported Length – Placing of Mid-Section Support

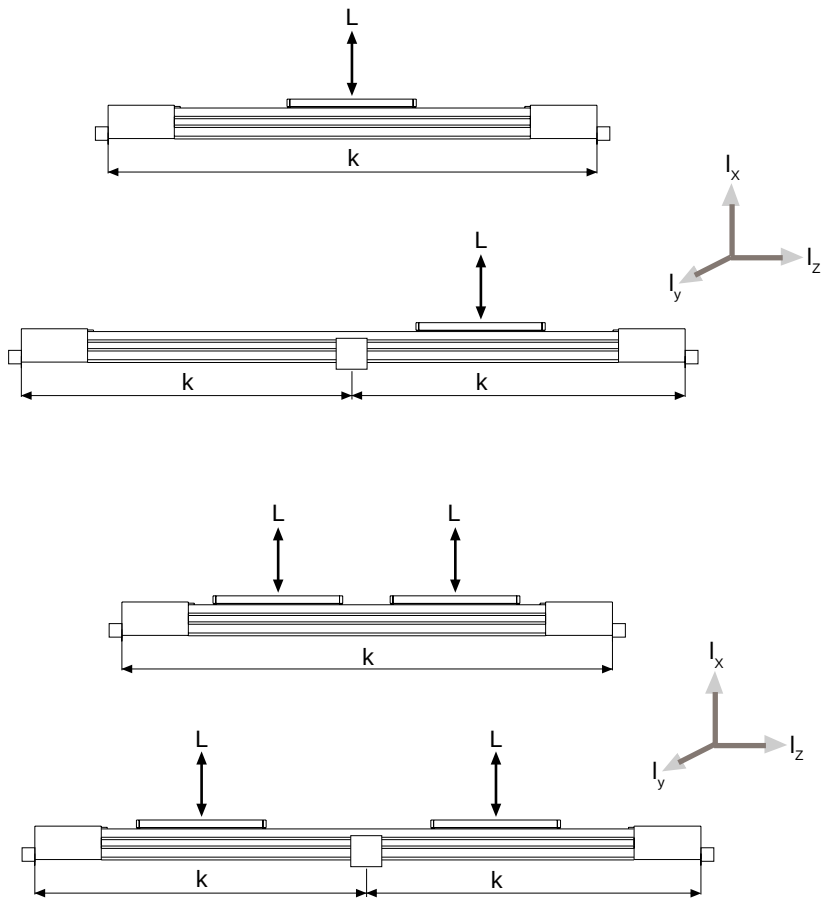

* For Bi-parting version the max. load (L) is the total load of both carriers
$L = L_{carrier\ 1} + L_{carrier\ 2}$

k = Max. allowable distance between mountings/mid-section support for a given load L

When loadings are below or up to the curve in the graph below the deflection will be max. 0.01 % of distance k

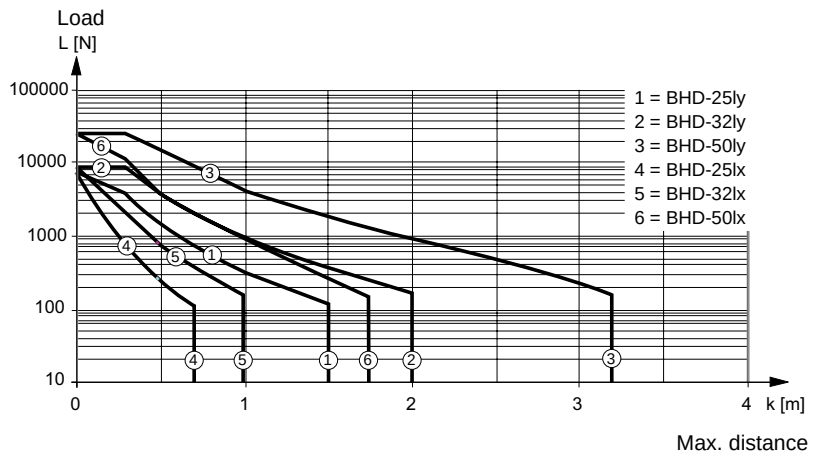

Maximum Allowable Unsupported Length

Stroke Length

Stroke Length

The stroke lengths of the linear actuators are available in multiples of 1 mm up to 7000 mm
Other stroke length are available on request.

The end of stroke must not be used as a mechanical stop.
Add to both ends, a minimum extra length, of 50 mm to the stroke corresponding to the linear motion per one revolution of the drive shaft.
The use of AC motor with frequency converter drives normally requires a larger 'extra length' than that required for servo systems.
For advise, please contact your local HOERBIGER-ORIGA technical support department.

When mechanical stops are required, external shock absorbers should be used (see separate catalogue).
Align the centreline of the shock absorber as closely as possible with the object's centre of gravity.

Belt Driven Linear Actuator – Basic Unit
Series OSP-E25BHD, -E32BHD, -E50BHD

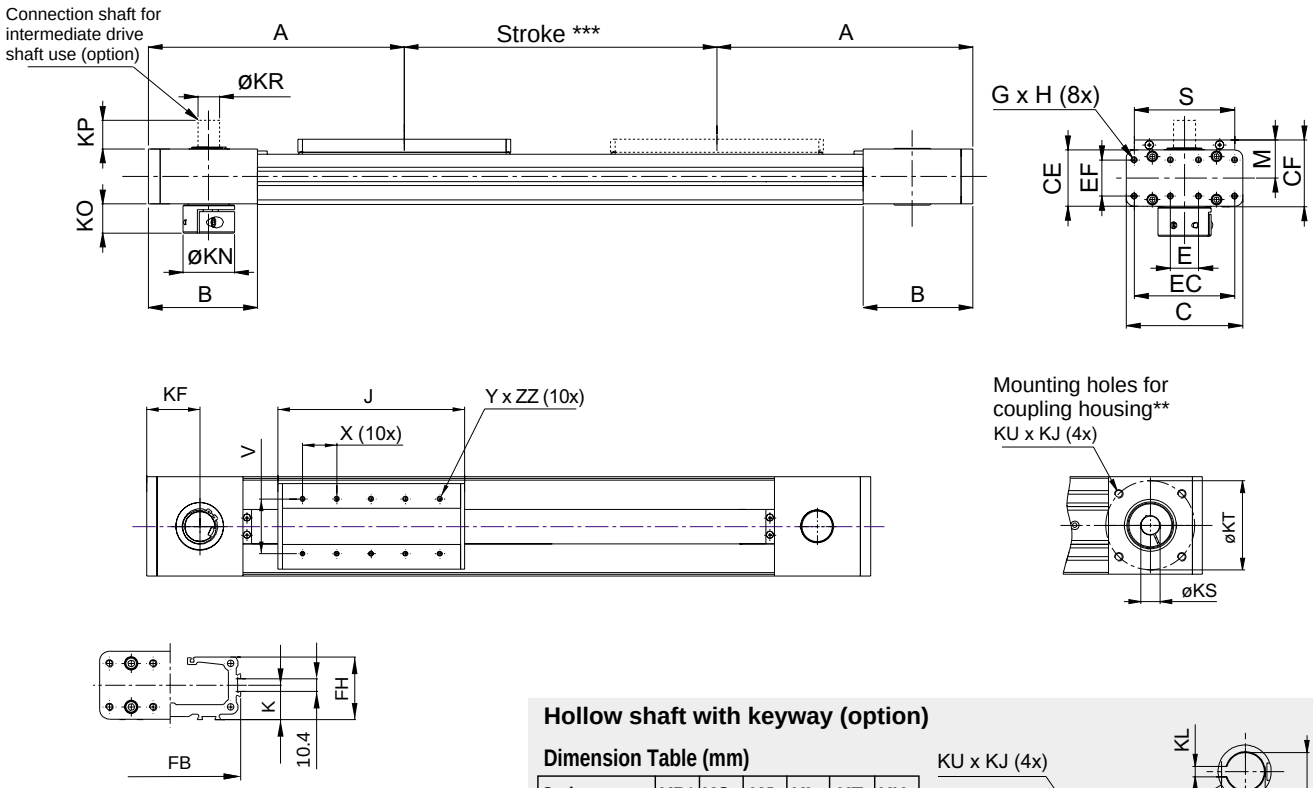

**** Note:**
Mounting holes for coupling housing/motor flange/ gearbox are placed on opposite side of carrier as standard. Placing on carrier side is optional.
(For optional drive shaft/actuating directions, see ordering information on data sheet 1.15.002E-6).

Hollow shaft with keyway (option)

Dimension Table (mm)

Series	KB*	KC	KJ	KL	KT	KU
OSP-E25BHD	16^{H7}	18.3	8	5	82	M8
OSP-E32BHD	22^{H7}	24.8	12	6	106	M10
OSP-E50BHD	32^{H7}	35.3	19	10	144	M12

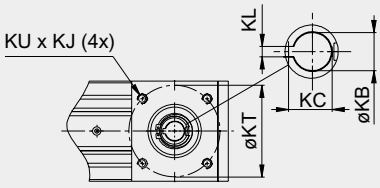

*Other dimensions for KB on request, see ordering information on data sheet 1.15.002E-6

Options – Bi-Parting Version
Series OSP-E25BHD-BP, -E32BHD-BP, -E50BHD-BP

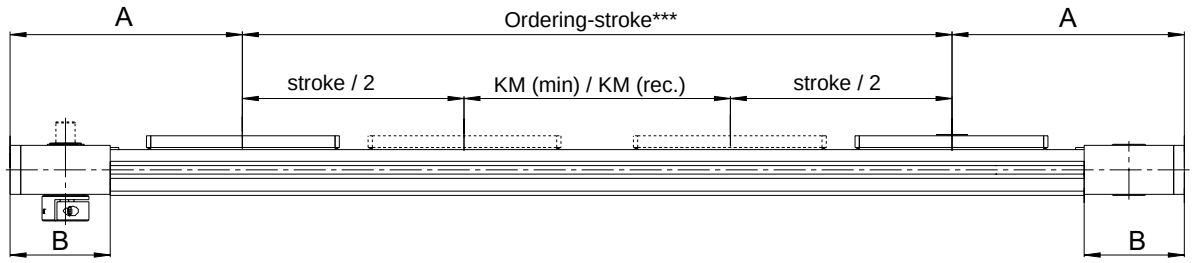

*****Note**:
The end of stroke must not be used as a mechanical stop. Add to both ends, a minimum extra length of 50 mm to the stroke.
The use of AC motor with frequency converter drives normally requires a larger 'extra length' than that required for servo systems.
For advise, please contact your local HOERBIGER-ORIGA technical support department.
When mechanical stops are required, external shock absorbers should be used (see separate catalogue).
Align the centreline of the shock absorber as closely as possible with the object's centre of gravity.

Dimension Table (mm)

Series	A	B	C	E	G	H	J	K	M	S	V	X	Y	CE	CF	EC	EF	FB	FH	KF	KJ	KM_{min}	KM_{rec}	KN	KO	KP	KR	KS*	KT	KU	ZZ
OSP-E25BHD	218	88	93	25	M5	10	178	21.5	31	85	64	40	M6	42	52.5	79	27	92	39.5	49	8	210	250	34	21.7	30	16^{h7}	16^{H7}	82	M8	8
OSP-E32BHD	262	112	116	28	M6	12	218	28.5	38	100	64	40	M6	56	66.5	100	36	116	51.7	62	12	250	300	53	30	30	22^{h7}	22^{H7}	106	M10	10
OSP-E50BHD	347	147	175	18	M6	12	263	43	49	124	90	60	M6	87	92.5	158	70	164	77	79.5	19	295	350	75	41	35	32^{h7}	32^{H7}	144	M12	10

*Other dimensions for KS on request, see ordering information on data sheet 1.15.002E-6

Integrated Planetary Gearbox

Series OSP-E..BHD – with optional Integrated Planetary Gearbox

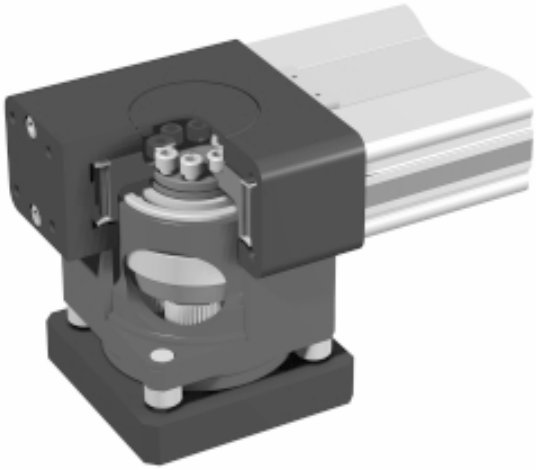

Features

- Highly compact and rigid solution fully integrated in the drive end housing
- Purpose designed for the BHD series
- Available with three standard ratios (3, 5 and 10)
- Very low backlash
- A wide range of available motor flanges

Please contact your local HOERBIGER-ORIGA technical support for available motor flanges.

For motors and controllers, see separate catalogue.

Material:
Aluminium (AL-H) / Steel (St-H)

Standard Versions:

- Gearbox placed on opposite side of carrier

Special Versions:

- Gearbox placed on same side as carrier

Note:
When ordering, specify type of motor and model for correct motor flange.

Performance Overview

Characteristics		Unit	Description		
			OSP-E25BHD	**OSP-E32BHD**	**OSP-E50BHD**
Ratio (1-stage)	i		3/5/10	3/5/10	3/5/10
Max axial load	F_{amax}	[N]	1550	1900	4000
Torsional rigidity (i=5)	$C_{t.21}$	[Nm/arcmin]	3,3	9	24
Torsional rigidity (i=3/10)	$C_{t.21}$	[Nm/arcmin]	2,8	7,5	20,5
Torsional backlash	J_t	[arcmin]	<12	<12	<12
Nominal input speed	n_{nom}	[min^{-1}]	3700	3400	2600
Max input speed	n_{1max}	[min^{-1}]	6000	6000	6000
No-load running torque at Nominal input speed	T_{012}	[Nm]	<0,14	<0,51	<1,5
Lifetime		[hours]	20 000	20 000	20 000
Efficiency (1-stage)	η	[%]	>97	>97	>97
Noise level (n_1=3000 rpm)	L_{PA}	[db]	<70	<72	<74

Dimensions

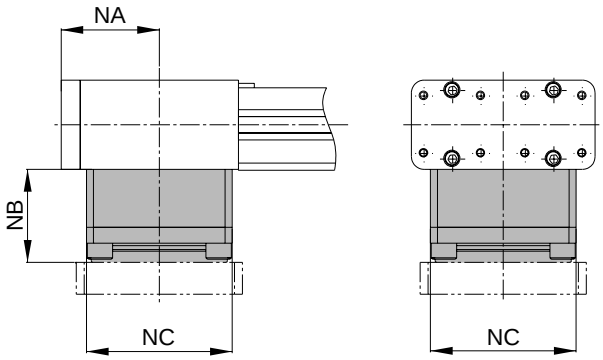

(For options drive shaft/actuating direction, see information on data sheet 1.15.002E-6).

Dimension Table (mm) and additional Weight (kg)

Series	NA	NB	NC	Weight (mass) [kg]
OSP-E25BHD	49	43	76	2.6
OSP-E32BHD	62	47	92	4.9
OSP-E50BHD	79.5	49.5	121	9.6

Order Instructions – Basic Electric Linear Actuator - Series OSP-E..BHD

Electric Linear Actuator

	OSP-E	25 –	5	0	0	0	2 –	00500

Size

25 = Size 25
32 = Size 32
50 = Size 50

Actuator

5 = Belt-driven Heavy Duty (BHD)

Carrier Mounting

0 = Standard
1 = Tandem
(Option, please contact customer support)
2 = Bi-Parting

Actuating Direction Options

Important in parallel operations, e.g. with intermediate drive shaft.

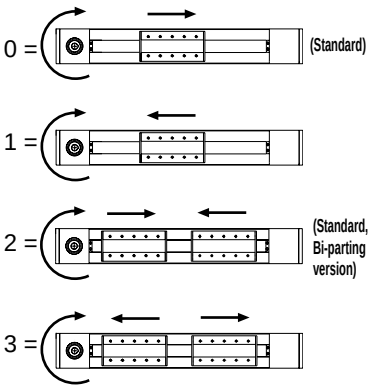

Stroke

Input (five digits) in mm

Drive Shaft Options

X = No option (Integrated gearbox)
2 = Clamp shaft, Standard
Standard placing of motor mounting holes
3 = Clamp shaft + connection shaft
Standard placing of motor mounting holes
4 = Clamp shaft
Non standard placing of motor mounting holes
5 = Clamp shaft + connection shaft
Non standard placing of motor mounting holes
6 = Hollow shaft with keyway
Standard placing of motor mounting holes
7 = Hollow shaft with keyway
Non standard placing of motor mounting holes
9 = Non standard drive shaft
Please contact customer support for specification drive shaft type, placing and KB/KS dimension

Integrated Gearbox

0 = Without integrated gearbox
1 = Integrated gearbox
Ratio i = 3, Standard placing
2 = Integrated gearbox
Ratio i = 5, Standard placing
3 = Integrated gearbox
Ratio i = 10, Standard placing
4 = Integrated gearbox
Ratio i = 3, Non standard placing
5 = Integrated gearbox
Ratio i = 5, Non standard placing
6 = Integrated gearbox
Ratio i = 10, Non standard placing

Specify type of motor and model for correct motor flange

Accessories - please order separately

Description	Further Information see Data Sheet No.
End Cap Mountings	**1.45.022E**
Mid-Section Support	**1.45.023E**
Adaptor Profile	**1.45.026E**
T-Nut Profile	**1.45.027E**
Coupling Housing (for motor, Clamp Shaft version only)	**1.45.028E**
Proximity Sensors	**1.45.101E**
Multi-Axis Connection Systems	**1.38.001E**
Motor and Controller	see separately Catalogue

Linear Actuator with Toothed Belt
Series OSP-E..B

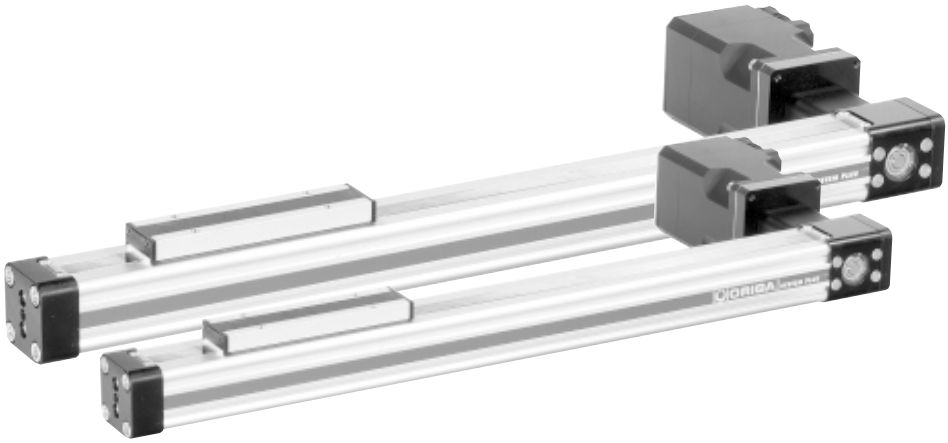

Contents

Description	Data Sheet No.	Page
Overview	1.20.001	21-24
Technical Data	1.20.002-1 to 5	25-29
Dimensions	1.20.002-6	30
Order Instructions	1.20.002-7	31

ELECTRIC LINEAR ACTUATOR FOR POINT-TO-POINT APPLICATIONS

A completely new generation of linear drives which can be integrated into any machine layout neatly and simply.

Linear Actuator with Toothed Belt

Advantages:

- Precise path and position control
- High speed operation
- Easy installation
- Low maintenance
- Ideal for precise point-to-point and reciprocating applications

Features:

- Integrated drive and guidance system
- Long available strokes
- Complete motor and control packages
- Diverse range of accessories and mountings
- Bi-parting and special options available

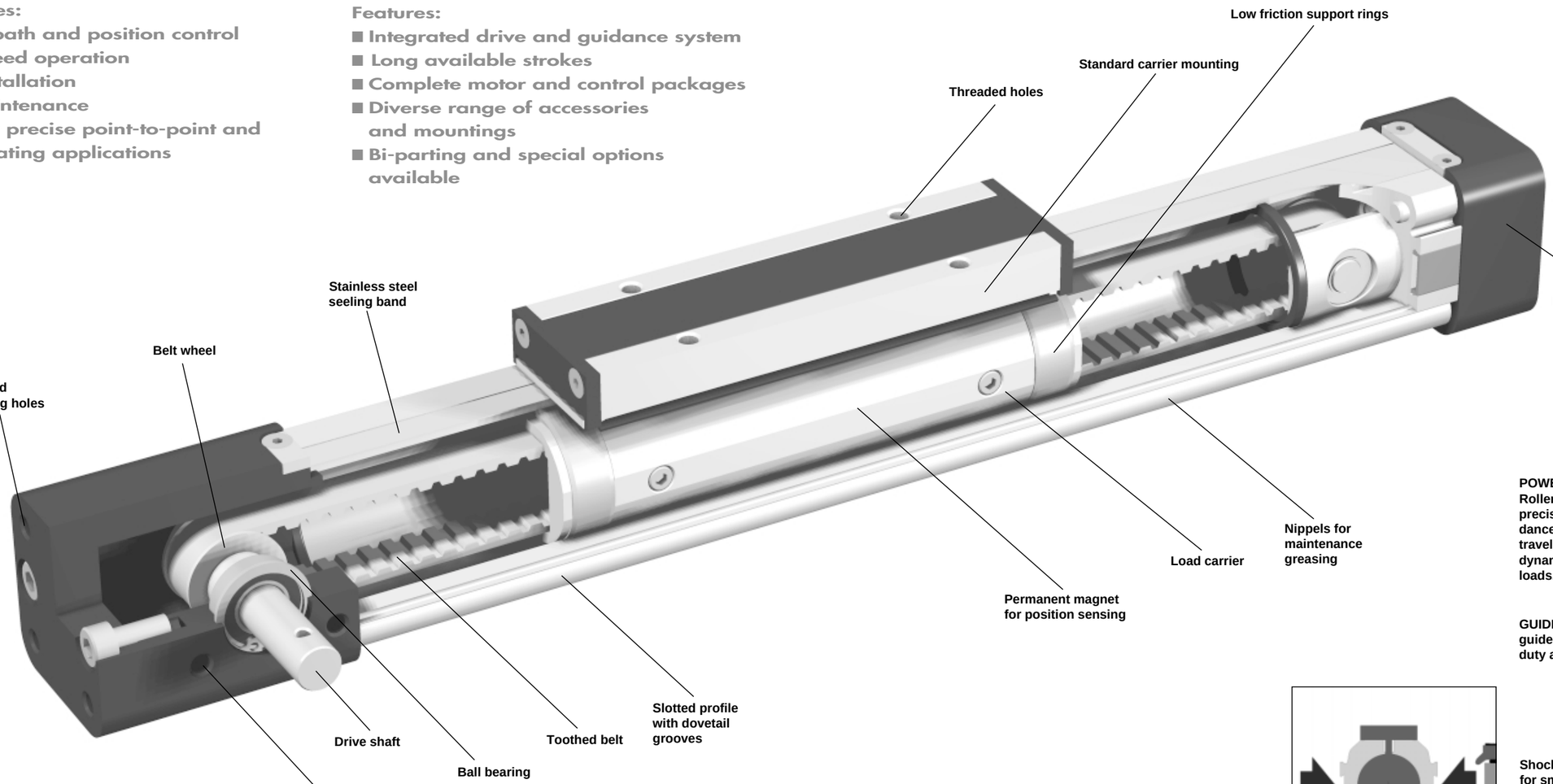

Install the OSP-System to simplify design work! The files are compatible with all popular CAD systems and package hardware.

PROLINE
The compact aluminium roller guide for high loads and velocities.

POWERSLIDE
Roller bearing precision guidance for smooth travel and high dynamic or static loads.

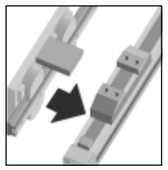

GUIDELINE linear guides for heavy duty applications.

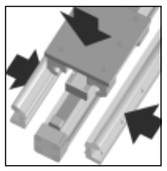

Shock Absorbers for smooth absorption of kinetic energy.

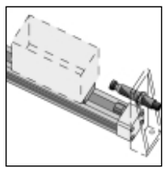

The dovetailed mounting rails of the new linear actuator expand its function into that of a universal system carrier. Modular system components are simply clamped on.

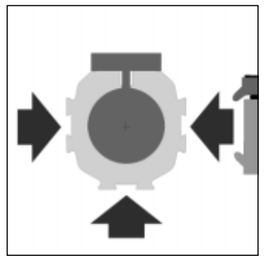

OPTIONS AND ACCESSORIES

SERIES OSP-E, BELT DRIVEN

STANDARD VERSIONS OSP-E..B

Data sheets 1.20.002E-1, -2

Standard carrier with integral guidance.
Dovetail profile for mounting of accessories and the actuator itself.

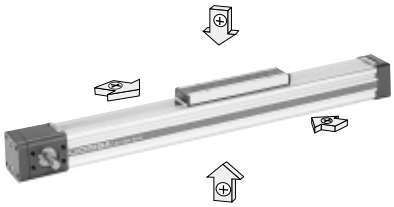

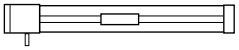

BASIC ACTUATOR OPTIONS

DRIVE SHAFT OPTIONS

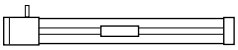

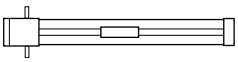

MOUNTINGS FOR OSP-E25 TO E50

CLEVIS MOUNTING

Data sheet 1.45.002E
Carrier mounting for driving loads supported by external linear guides.

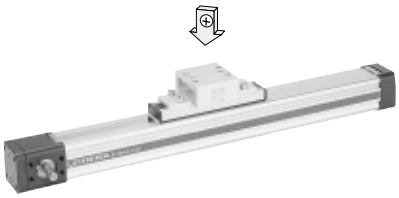

END CAP MOUNTING
Data sheet 1.45.003E
For end-mounting of the actuator

MID-SECTION SUPPORT

Data sheet 1.45.004E
For supporting long actuators or mounting the actuator on the dovetail grooves.

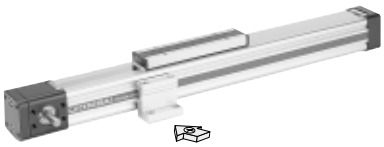

INVERSION MOUNTING

Data sheet 1.45.006E

The inversion mounting, mounted on the carrier, transfers the driving force to the opposite side, e.g. for dirty environments.

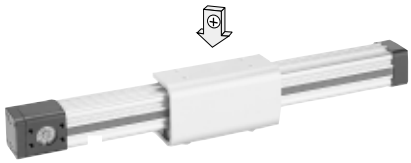

ACCESSORIES

PROXIMITY SENSOR
SERIES RS AND ES

Data sheet 1.45.100E
For electrical sensing of end and intermediate carrier positions.

MOTOR MOUNTINGS

Data sheet 1.45.009E

A3P106D00DZ50X

The right to introduce technical modifications is reserved

Linear Actuator with Toothed Belt

Series OSP-E..B
Size 25, 32, 50

OSP
ORIGA SYSTEM PLUS

Characteristics

Characteristics		Symbol	Unit	Description
General Features				
Type				Linear Actuator with Toothed Belt
Series				OSP-E..B
Mounting				See drawings
Ambient Temperature range		ϑ_{min} ϑ_{max}	°C °C	-30 +80
Weight (mass)			kg	See table
Installation				In any position
Material	Slotted profile			Extruded anodized aluminium
	Toothed belt			Steel-corded polyurethane
	Belt wheels			Aluminium
	Sealing band			Hardened stainless steel
	Screws, nuts			Zinc plated steel
	Mountings			Zinc plated steel and aluminium
Encapsulation class			IP	54

Weight (mass) kg and Inertia

Series	Weight (mass)[kg]			Inertia [x 10^{-6} kgm^2]	
	At stroke 0 m	Add per metre stroke	Moving mass	At stroke 0 m	Add per metre
OSP-E25	0.9	1.6	0.2	25.3	6.6
OSP-E32	1.9	3.2	0.4	43.3	10
OSP-E50	5.2	6.2	1.0	312.2	45

Standard Versions:

- Standard carrier with integral guidance.
- Dovetail profile for mounting of accessories and the actuator itself.

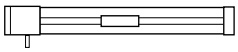

Special Versions:

- Position of Drive Shafts

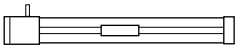

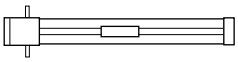

Installation Instructions

Use the threaded holes in the end cap for mounting the linear actuator. See if mid-section supports are needed using the maximum allowable un-supported length graph on data sheet 1.20.002E-3
At least one end cap must be secured to prevent axial sliding when mid-section support is used.
When the linear actuator is moving an externally guided load, the clevis mounting should be used (see on data sheet 1.45.021E).

The linear actuators can be fitted with the standard carrier mounting facing in any direction.
To prevent contamination such as fluid ingress, the actuator should be fitted with its sealing band facing downwards.
The inversion mounting can be fitted to transfer the driving force to the opposite side (see on data sheet 1.45.025E).

Maintenance

All moving parts are long-term lubricated for a normal operational environment. We recommend a check and lubrication of the linear actuator, and if necessary a change of the toothed belt and wear parts, after an operation time of 4 000 hours of operation or 3 000 km, depending on the type of application.
Additional greasing is easily done by using nipples in the slotted profile.
Please see separate instructions.

Start Up

The products in this datasheet should not be operated until the machine/ application in which they are used has passed necessary inspection.

For **linear guides** see 1.40.020E to 024E
For **proximity sensors** see 1.45.101E,
For **mountings** and **accessories** see 1.45.020E to 028E

HOERBIGER ORIGA

A1P559E00DZ00X

The right to introduce technical modifications is reserved

Sizing Performance Overview Maximum Loadings

Sizing of Linear Actuator

The following steps are recommended for selection :

1. Required acceleration is shown in graphs on data sheet 1.20.002E-4.
2. Required torque is shown on data sheet 1.20.002E-5.
3. Check that maximum values in the adjacent charts are not exceeded.
4. Check max. allowable torque on drive shaft by using table T2. (Pay attention to note under table) If value is lower than required, overview the moving profile or select if possible a bigger unit.
5. Before sizing and specifying the motor, the average torque must be calculated using the cycle time of the application.
6. Check that the maximum allowable unsupported length is not exceeded (see on data sheet 1.20.002E-3).

Performance Overview

Characteristics		Unit	Description		
Size			**OSP-E25B**	**OSP-E32B**	**OSP-E50B**
Max. speed		[m/s]	2	3	5
Linear motion per revolution, drive shaft		[mm]	60	60	100
Max. rpm, drive shaft		[min^{-1}]	2 000	3 000	3 000
Max. effective	< 1 m/s:	[N]	50	150	425
action force	1- 2 m/s:	[N]	50	120	375
F_A at speed	> 2 m/s:	[N]	—	100	300
Max. acceleration/deceleration		[m/s^2]	10	10	10
Repeatability		[mm/m]	±0,05	±0.05	±0.05
Max. standard stroke length		[m]	3.0	5.0	5.0

Maximum Allowable Torque on Drive Shaft vs Speed and Stroke (T2)

OSP-E25B				OSP-E32B				OSP-E50B			
Speed [m/s]	Torque [Nm]	Stroke [m]	Torque [Nm]	Speed [m/s]	Torque [Nm]	Stroke [m]	Torque [Nm]	Speed [m/s]	Torque [Nm]	Stroke [m]	Torque [Nm]
1	0.9	1	0.9	1	2.3	1	2.3	1	10.0	1	10.0
2	0.9	2	0.9	2	2.0	2	2.3	2	9.5	2	10.0
		3	0.9	3	1.8	3	2.3	3	9.0	3	9.0
						4	2.3	4	8.0	4	7.0
						5	1.8	5	7.5	5	6.0

Note: **Max. torque is the lowest value of speed or stroke related torque value.**
Example above: OSP-E32B-stroke 2 m, required speed 3 m/s; speed 3 m/s gives 1.8 Nm and stroke 2 m gives 2.3 Nm. Max. torque for this application is 1.8 Nm.

Maximum Allowable Static Loadings

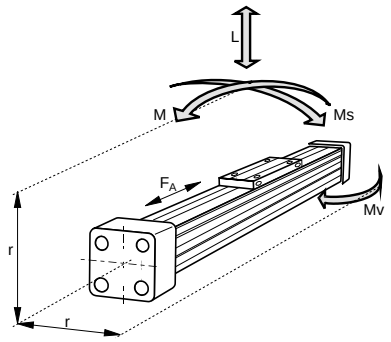

M = F · r.
Bending moments are calculated from the centre of the linear actuator

Size	Max. applied load L [N]	Max. moments [Nm] M	M_s	M_v
OSP-E25B	160	12	2	8
OSP-E32B	300	25	8	16
OSP-E50B	850	80	16	32

Combined Loadings

If several forces and moments are applied to the linear actuator simultaneously, then the following equation must be fulfilled in addition to the maximum loadings stated above.

$$\frac{L}{L\,(max)} + \frac{M}{M\,(max)} + \frac{M_s}{M_s\,(max)} + \frac{M_v}{M_v\,(max)} \leq 1$$

Maximum Allowable Unsupported Length – Placing of Mid-Section Support

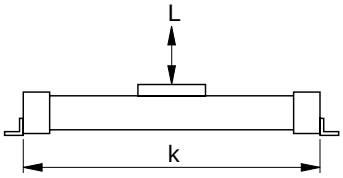

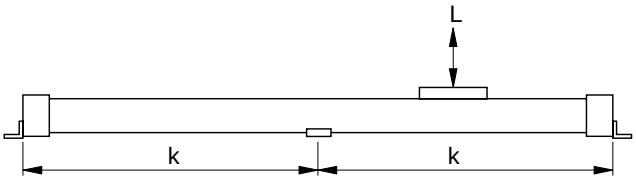

k = Maximum allowable distance between mountings/mid-section support for a given load (L)

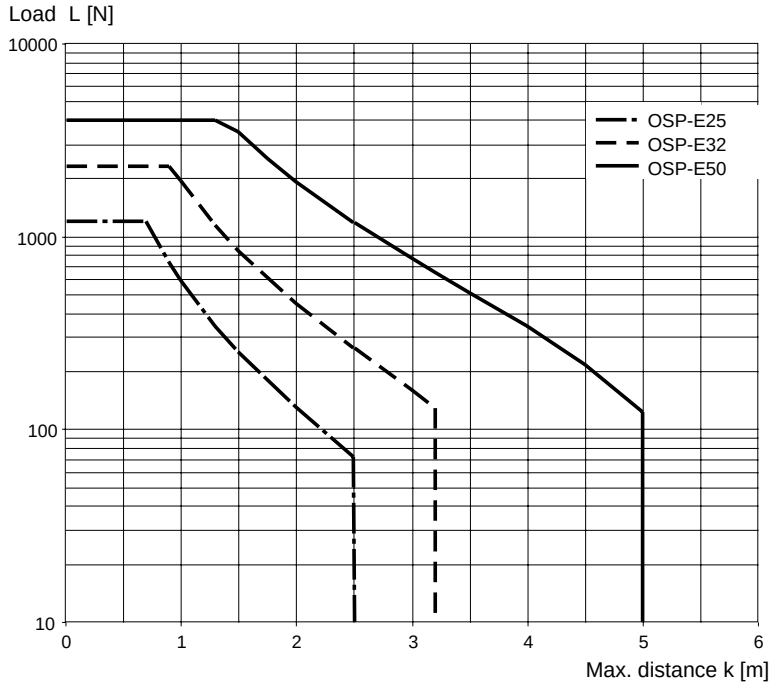

(When loadings are below or up to the curve in the above graph the deflection will be max. 0.2 % of distance k.)
Also note maximum applied load in the chart on data sheet 1.20.002E-2.

Maximum Allowable Unsupported Length

Stroke Length

Stroke Lengths

The stroke lengths of the linear actuators are available in multiples of 1 mm up to 3000 mm for size 25 and up to 5000 mm for size 32 and 50.

Other stroke lengths are available on request.

The end of stroke must not be used as a mechanical stop.
Add to both ends, a minimum extra length, corresponding to the linear motion per one revolution of the drive shaft.
The use of AC motor with frequency converter drives normally requires a larger 'extra length' than that required for servo systems.
For advise, please contact your local HOERBIGER-ORIGA technical support department.

When mechanical stops are required, external shock absorbers should be used (see separate catalogue).
Align the centreline of the shock absorber as closely as possible with the object's centre of gravity.

Mounting on the Drive Shaft

Do not expose the drive shaft to uncontrolled axial or radial forces when mounting coupler or belt wheel, a steadying block should be used.

Belt wheels

Minimum allowable number of teeth Z (AT5) at maximum applied torque.

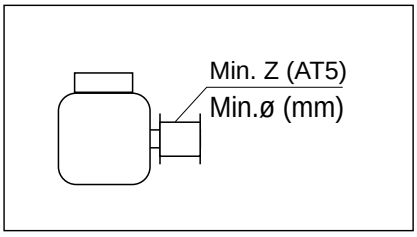

Size	Min. Z	Min. ø
OSP-E25B	24	38
OSP-E32B	24	38
OSP-E50B	36	57

Required Acceleration

Distance-Time Graph

Using the required travel distance and total time, the adjacent graphs show the required acceleration based on maximum speed.

The graphs assume that acceleration and deceleration are equal.

Please note that specifying non-essential high acceleration or short cycle time will result in an over-sized motor.

Max. speed 1 m/s

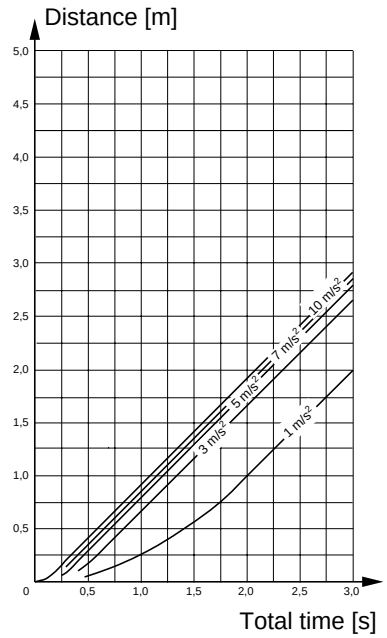

Max. speed 2 m/s

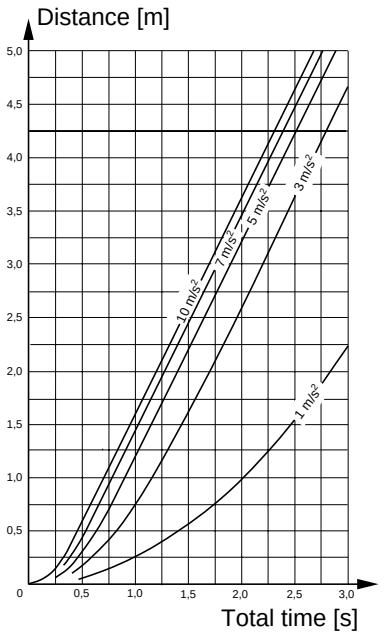

Max. speed 3 m/s

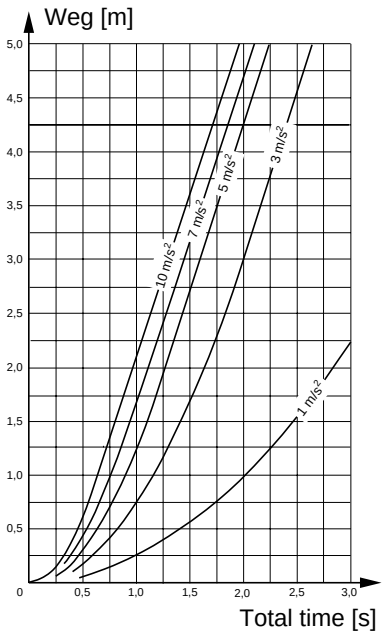

Max. speed 5 m/s

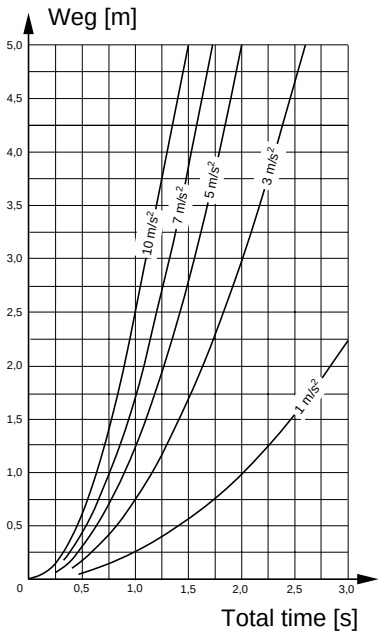

Required Torque

Using the known mass, the direction of the application and the required acceleration from the distance-time graphs, the linear actuator can be sized and the required torque is shown in the adjacent graphs.
Mass in graphs = Load + moving mass of the linear actuator (according to the weight chart on data sheet 1.20.002E-1).

Please note:
When using an additional guide, please add the mass of the carriage to the total moving mass.

Size OSP-E25, Horizontal Application

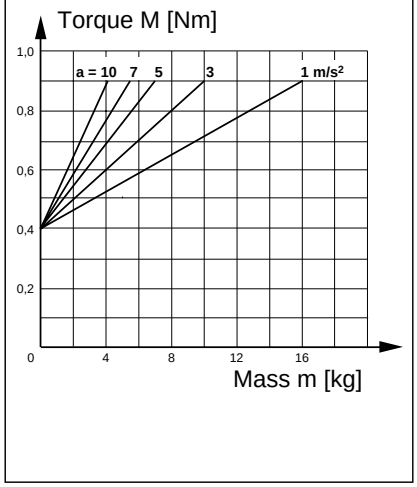

Size OSP-E25, Vertical Application

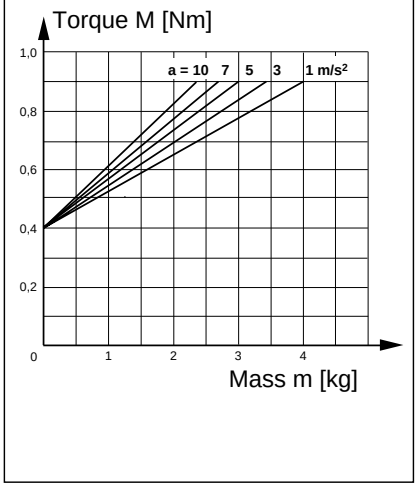

Size OSP-E32, Horizontal Application

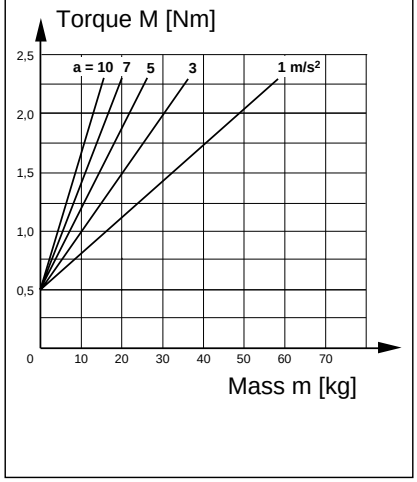

Size OSP-E32, Vertical Application

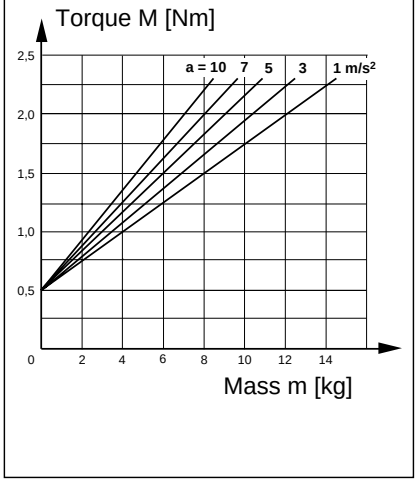

Size OSP-E50, Horizontal Application

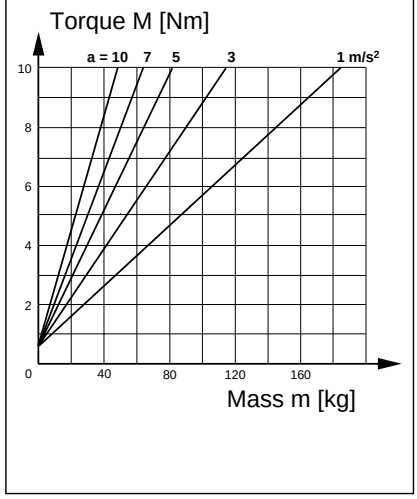

Size OSP-E50, Vertical Application

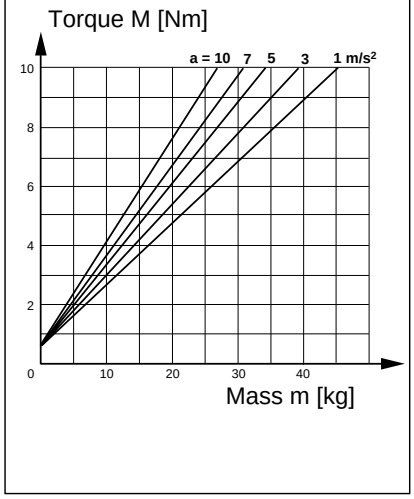

Belt Driven Linear Actuator - Basic Unit
Series OSP-E25B, -E32B, -E50B

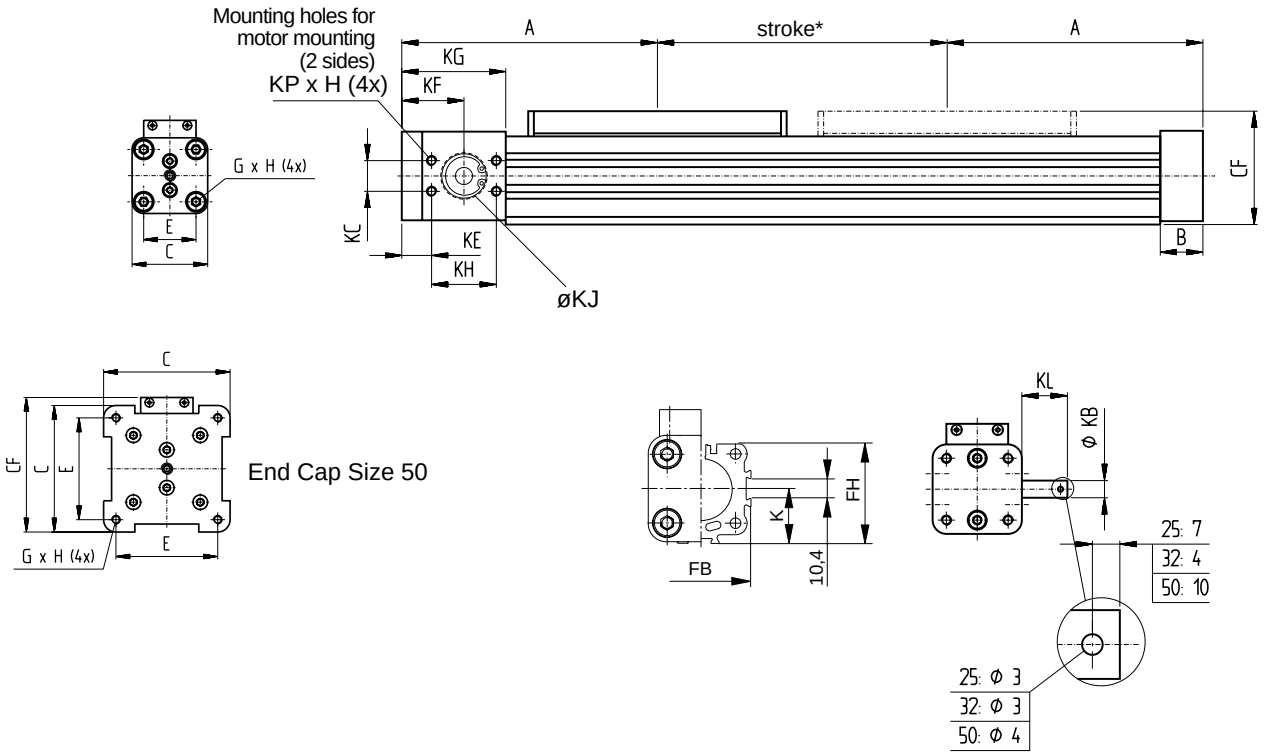

(For options on drive shaft, see ordering information on data sheet 1.20.002E-7)

*** The end of stroke must not be used as a mechanical stop. Add to both ends, a minimum extra length, corresponding to the linear motion per one revolution of the drive shaft. The use of AC motor with frequency converter drives normally requires a larger 'extra length' than that required for servo systems. For advise, please contact your local HOERBIGER-ORIGA technical support department.**

When mechanical stops are required, external shock absorbers should be used (see separate catalogue). Align the centreline of the shock absorber as closely as possible with the object's centre of gravity.

Standard Carrier Mounting
Series OSP-E25B, -E32B, -E50B

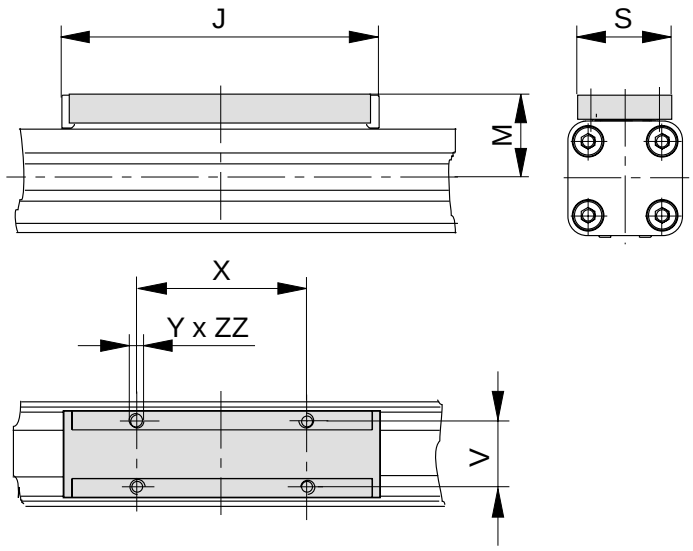

Dimension Table (mm)

Series	A	B	C	E	G	H	J	K	M	S	V	X	Y	CF	FB	FH	KB	KC	KE	KF	KG	KH	KJ	KL	KP	ZZ
OSP-E25B	125	22	41	27	M5	10	117	21.5	31	33	25	65	M5	52.5	40	39.5	10_{j6}	15	22	37	57	30	19^{H7}	24	M5	8
OSP-E32B	150	25	52	36	M6	12	152	28.5	38	36	27	90	M6	66.5	52	51.7	10_{j6}	18	17.5	36.5	61	38	26^{H7}	26	M6	10
OSP-E50B	200	25	87	70	M6	12	200	43	49	36	27	110	M6	92.5	76	77	16_{h8}	32	23.5	48.5	85	50	40^{H7}	34	M8	10

Electric Linear Actuator

OSP-E	25 –	0	0	0	0	0 –	00500

Size

25 = Size 25
32 = Size 32
50 = Size 50

Actuator

0 = Belt-driven (B)

Carrier Mounting

0 = Standard
1 = Tandem
(Option, please contact customer support)

Drive Shaft Options

0 = 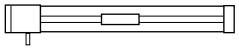 (Standard)

1 = 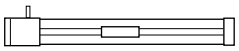

2 = 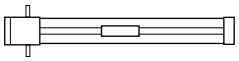

Stroke

Input (five digits) in mm

Open Option

0 = Not defined

Gearbox

0 = Without gearbox

Accessories - please order separately

Description	Further information see Data Sheet No.
Clevis Mounting	**1.45.021E**
End Cap Mountings	**1.45.022E**
Mid-Section Support	**1.45.023E**
Inversion Mounting	**1.45.025E**
Adaptor Profile	**1.45.026E**
T-Nut Profile	**1.45.027E**
Coupling Housing (for motor)	**1.45.028E**
Proximity Sensors	**1.45.100E**
Stepper Motor and Controller	**see Catalogue A4P019E**
AC-Servo Motor and Controller	**see Catalogue A4P019E**

Linear Actuator with Toothed Belt and Bi-Parting Carriers Series OSP-E..BP

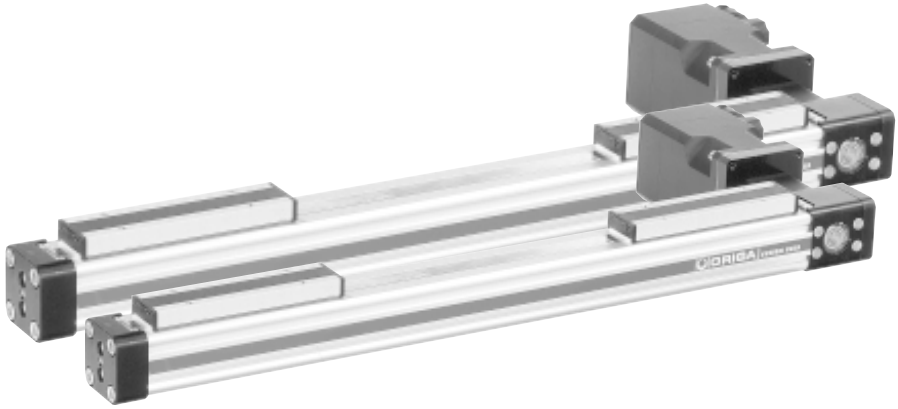

Contents

Description	Data Sheet No.	Page
Overview	1.25.001	33-36
Technical Data	1.25.002-1 to 5	37-41
Dimensions	1.25.002-6	42
Order Instructions	1.25.002-7	43

ELECTRIC LINEAR ACTUATOR FOR SYNCHRONIZED BI-PARTING APPLICATIONS

A completely new generation of linear drives which can be integrated into any machine layout neatly and simply.

Linear Actuator with Toothed Belt and Bi-Parting Carriers

Advantages:
- Precise synchronized bi-parting movements
- Precise path and position control
- High speed operation
- Easy installation
- Low maintenance
- Ideal for centering and door operating applications

Features:
- Integrated drive and guidance system
- Complete motor and control packages
- Diverse range of accessories and mountings
- Special options available

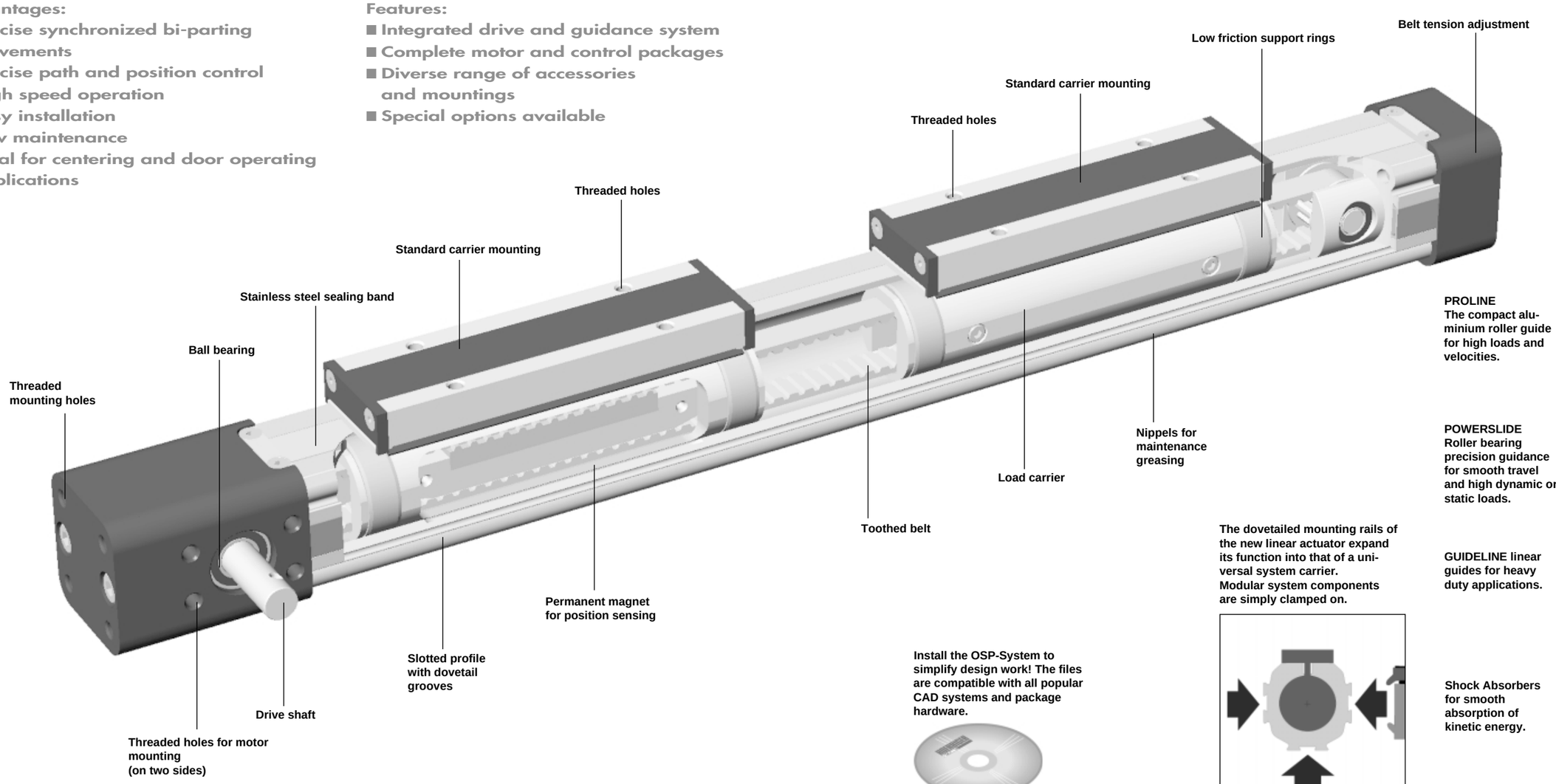

Install the OSP-System to simplify design work! The files are compatible with all popular CAD systems and package hardware.

The dovetailed mounting rails of the new linear actuator expand its function into that of a universal system carrier. Modular system components are simply clamped on.

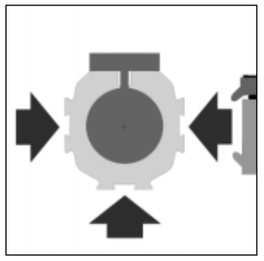

PROLINE
The compact aluminium roller guide for high loads and velocities.

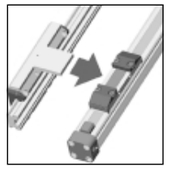

POWERSLIDE
Roller bearing precision guidance for smooth travel and high dynamic or static loads.

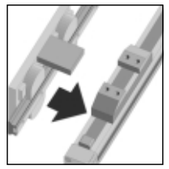

GUIDELINE linear guides for heavy duty applications.

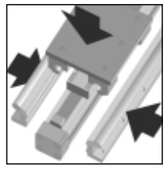

Shock Absorbers for smooth absorption of kinetic energy.

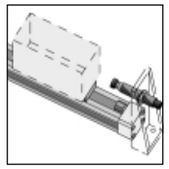

OPTIONS AND ACCESSORIES

SERIES OSP-E, BI-PARTING BELT DRIVEN

STANDARD VERSIONS OSP-E..BP

Data sheets 1.25.002E-1, -2

Standard carrier with integral guidance.
Dovetail profile for mounting of accessories and the actuator itself.

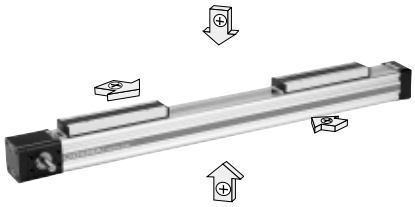

BASIC ACTUATOR OPTIONS

DRIVE SHAFT OPTIONS

MOUNTINGS FOR OSP-E25 TO E50

CLEVIS MOUNTING

Data sheet 1.45.021E
Carrier mounting for driving loads supported by external linear guides.

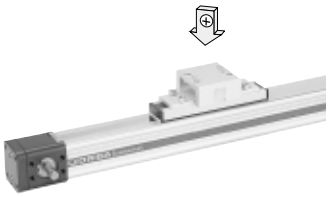

END CAP MOUNTING
Data sheet 1.45.022E
For end-mounting of the actuator

MID-SECTION SUPPORT

Data sheet 1.45.023E
For supporting long actuators or mounting the actuator on the dovetail grooves.

INVERSION MOUNTING

Data sheet 1.45.025E

The inversion mounting, mounted on the carrier, transfers the driving force to the opposite side, e.g. for dirty environments..

ACCESSORIES

PROXIMITY SENSOR
SERIES RS AND ES

Data sheet 1.45.101E
For electrical sensing of end and intermediate carrier positions.

MOTOR MOUNTINGS

Data sheet 1.45.028E

A3P153E00IZ50X

The right to introduce technical modifications is reserved

Linear Actuator with Toothed Belt and Bi-Parting Carriers

Series OSP-E..BP
Size 25, 32, 50

OSP
ORIGA SYSTEM PLUS

Standard Versions:

- Standard carrier with integral guidance.
- Dovetail profile for mounting of accessories and the actuator itself.

Special Versions:

- Position of Drive Shafts

Characteristics

Characteristics		Symbol	Unit	Description
General Features				
Type				Bi-Parting Belt-Driven for synchronized bi-parting movements
Series				OSP-E..BP
Mounting				See drawings
Ambient Temperature range		ϑ_{min} ϑ_{max}	°C °C	-30 +80
Weight (mass)			kg	See table
Installation				In any position
Material	Slotted profile			Extruded anodized aluminium
	Toothed belt			Steel-corded polyurethane
	Belt wheels			Aluminium
	Sealing band			Hardened stainless steel
	Screws, nuts			Zinc plated steel
	Mountings			Zinc plated steel and aluminium
Encapsulation class			IP	54

Weight (mass) kg and Inertia

Series	Weight (mass)[kg]			Inertia [x 10^{-6} kgm^2]	
	At stroke 0 m	Add per metre stroke	Moving mass	At stroke 0 m	Add per metre
OSP-E25BP	1.2	1.6	0.5	48	6.6
OSP-E32BP	2.3	3.2	0.8	83	10
OSP-E50BP	6.3	6.2	2.1	585	45

Installation Instructions

Use the threaded holes in the end cap for mounting the linear actuator. See if mid-section supports are needed using the maximum allowable un-supported length graph on data sheet 1.25.002-E-3
At least one end cap must be secured to prevent axial sliding when mid-section support is used.
When the linear actuator is moving an externally guided load, the clevis mounting should be used (see on data sheet 1.45.021E).

The linear actuators can be fitted with the standard carrier mounting facing in any direction.
To prevent contamination such as fluid ingress, the actuator should be fitted with its sealing band facing downwards.
The inversion mounting can be fitted to transfer the driving force to the opposite side (see on data sheet 1.45.025E).

Maintenance

All moving parts are long-term lubricated for a normal operational environment. We recommend a check and lubrication of the linear actuator, and if necessary a change of the toothed belt and wear parts, after an operation time of 4 000 hours of operation or 3 000 km, depending on the type of application.
Additional greasing is easily done by using nipples in the slotted profile.
Please see separate instructions.

Start Up

The products in this datasheet should not be operated until the machine/ application in which they are used has passed necessary inspection.

For **linear guides** see 1.40.020E to 024E
For **proximity sensors** see 1.45.101E,
For **mountings** and **accessories** see 1.45.020E to 028E

HOERBIGER ORIGA

A1P638E00IZ00X

The right to introduce technical modifications is reserved

Sizing Performance Overview Maximum Loadings

Sizing of Linear Actuator

The following steps are recommended for selection :

1. Required acceleration is shown in graphs on data sheet 1.25.002E-4.
2. Required torque is shown on data sheet 1.25.002E-5.
3. Check that maximum values in the adjacent charts are not exceeded.
4. Check max. allowable torque on drive shaft by using table T2. (Pay attention to note under table) If value is lower than required, overview the moving profile or select if possible a bigger unit.
5. Before sizing and specifying the motor, the average torque must be calculated using the cycle time of the application.
6. Check that the maximum allowable unsupported length is not exceeded (see on data sheet 1.25.002E-3).

Performance Overview

Characteristics		Unit	Description		
Size			**OSP-E25BP**	**OSP-E32BP**	**OSP-E50BP**
Max. speed		[m/s]	2	3	5
Linear motion per revolution, drive shaft		[mm]	60	60	100
Max. rpm, drive shaft		[min^{-1}]	2 000	3 000	3 000
Max. effective	< 1 m/s:	[N]	50	150	425
action force	1- 2 m/s:	[N]	50	120	375
F_A at speed	> 2 m/s:	[N]	—	100	300
Max. acceleration/deceleration		[m/s^2]	10	10	10
Repeatability		[mm/m]	±0,05	±0.05	±0.05
Max. standard stroke length		[m]	2 x 1.5	2 x 2.5	2 x 2.5

Maximum Allowable Torque on Drive Shaft vs Speed and Stroke* (T2)

OSP-E25BP				OSP-E32BP				OSP-E50BP			
Speed [m/s]	Torque [Nm]	Stroke* [m]	Torque [Nm]	Speed [m/s]	Torque [Nm]	Stroke* [m]	Torque [Nm]	Speed [m/s]	Torque [Nm]	Stroke* [m]	Torque [Nm]
1	0.9	1	0.9	1	2.3	1	2.3	1	10.0	1	10.0
2	0.9	2	0.9	2	2.0	2	2.3	2	9.5	2	10.0
		3	0.9	3	1.8	3	2.3	3	9.0	3	9.0
						4	2.3	4	8.0	4	7.0
						5	1.8	5	7.5	5	6.0

Note: **Max. torque is the lowest value of speed or stroke related torque value.**
Example above: OSP-E32B-stroke 2 m, required speed 3 m/s; speed 3 m/s gives 1.8 Nm and stroke 2 m gives 2.3 Nm. Max. torque for this application is 1.8 Nm.
***** The stroke is the ordering stroke, see data sheet 1.25.002E-6.

Maximum Allowable Static Loadings

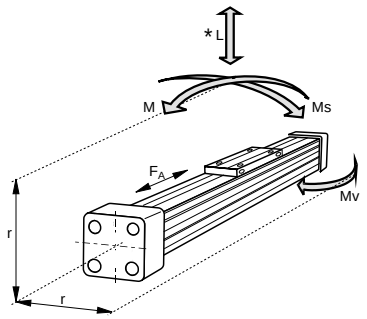

M = F · r.
Bending moments are calculated from the centre of the linear actuator

Size	Max. applied load L [N]	Max. moments [Nm] M*	M_s	M_v
OSP-E25BP	160	12	2	8
OSP-E32BP	300	25	8	16
OSP-E50BP	850	80	16	32

*The max. load and the max. moments is the total values of both carriers.

Combined Loadings

If several forces and moments are applied to the linear actuator simultaneously, then the following equation must be fulfilled in addition to the maximum loadings stated above.

$$\frac{L}{L\,(max)} + \frac{M}{M\,(max)} + \frac{M_s}{M_s\,(max)} + \frac{M_v}{M_v\,(max)} \leq 1$$

Maximum Allowable Unsupported Length – Placing of Mid-Section Support

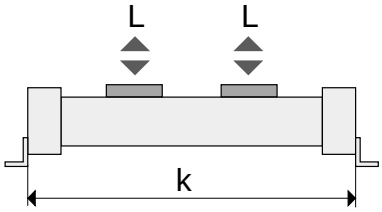

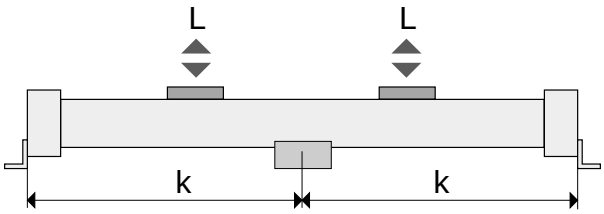

k = Maximum allowable distance between mountings/mid-section support for a given load (L).
The max. load (L) is the total load of both carriers
$L = L_{carrier\ 1} + L_{carrier\ 2}$

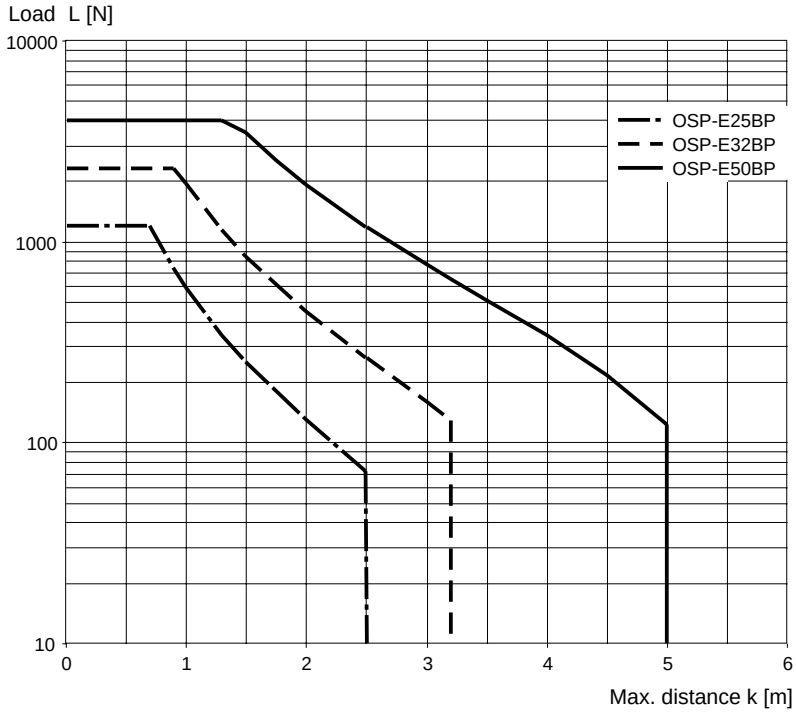

(When loadings are below or up to the curve in the above graph the deflection will be max. 0.2 % of distance k.)
Also note maximum applied load in the chart on data sheet 1.25.002E-2.

Maximum Allowable Unsupported Length

Stroke Length

Stroke Lengths

The stroke lengths of linear actuators are available in multiples of 1 mm up max. 2 x 2500 mm
(OSP-E25BP: max. 2 x 1500 mm).

Other stroke lengths are available on request.

The end of stroke must not be used as a mechanical stop.
Add to both ends, a minimum extra length, corresponding to the linear motion per one revolution of the drive shaft.
The use of AC motor with frequency converter drives normally requires a larger 'extra length' than that required for servo systems.
For advise, please contact your local HOERBIGER-ORIGA technical support department.

When mechanical stops are required, external shock absorbers should be used (see separate catalogue).
Align the centreline of the shock absorber as closely as possible with the object's centre of gravity.

Mounting on the Drive Shaft

Do not expose the drive shaft to uncontrolled axial or radial forces when mounting coupler or belt wheel, a steadying block should be used.

Belt wheels

Minimum allowable number of teeth Z (AT5) at maximum applied torque.

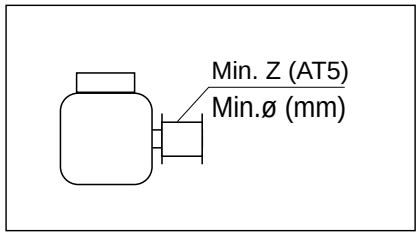

Size	Min. Z	Min. ø
OSP-E25BP	24	38
OSP-E32BP	24	38
OSP-E50BP	36	57

Required Acceleration

Distance-Time Graph

Using the required travel distance and total time, the adjacent graphs show the required acceleration based on maximum speed.

The graphs assume that acceleration and deceleration are equal.

Please note that specifying non-essential high acceleration or short cycle time will result in an over-sized motor.

Max. speed 1 m/s

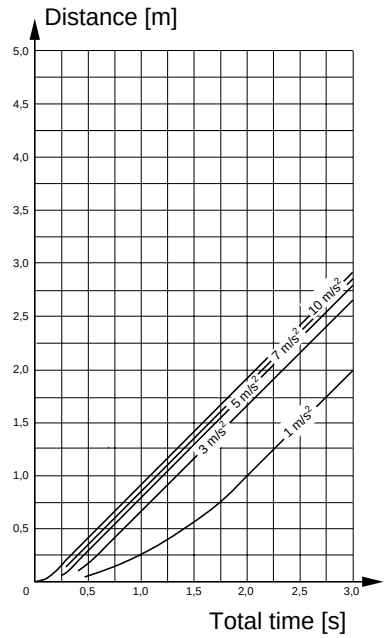

Max. speed 2 m/s

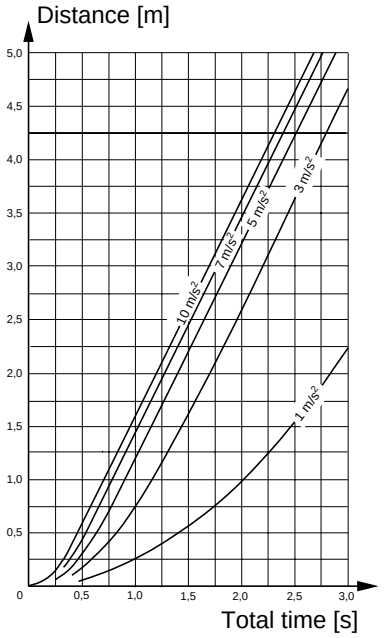

Max. speed 3 m/s

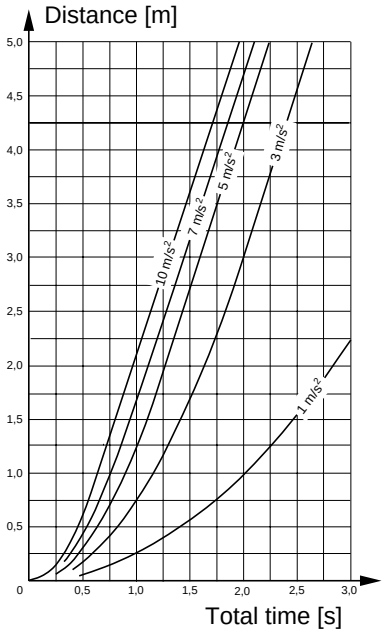

Max. speed 5 m/s

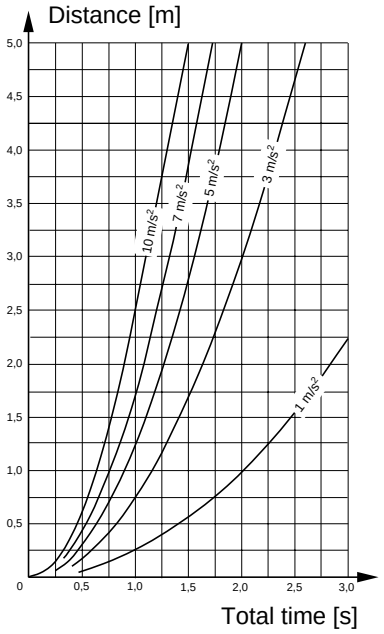

Required Torque

Using the known mass, the direction of the application and the required acceleration from the distance-time graphs, the linear actuator can be sized and the required torque is shown in the adjacent graphs.
Mass in graphs = Load + moving mass of the linear actuator (according to the weight chart on data sheet 1.25.002E-1).

Please note:
When using an additional guide, please add the mass of the carriage to the total moving mass.

Size OSP-E25, Horizontal Application

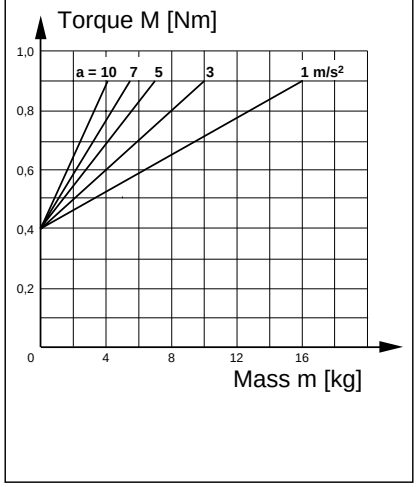

Size OSP-E25, Vertical Application

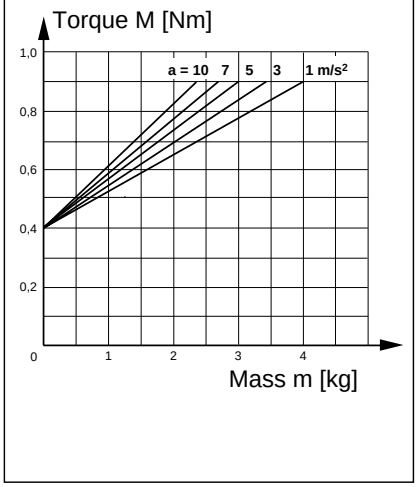

Size OSP-E32, Horizontal Application

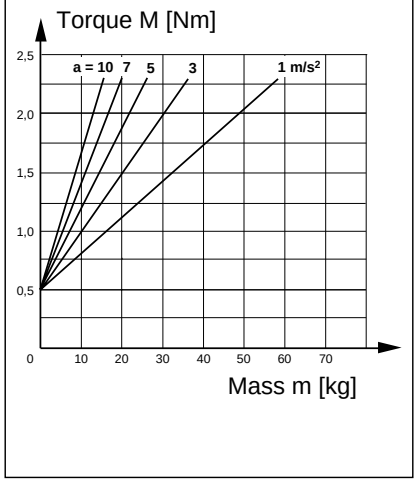

Size OSP-E32, Vertical Application

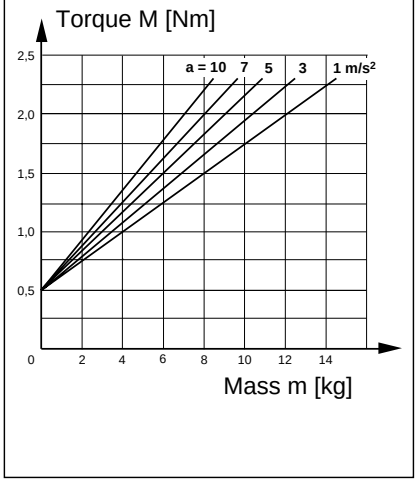

Size OSP-E50, Horizontal Application

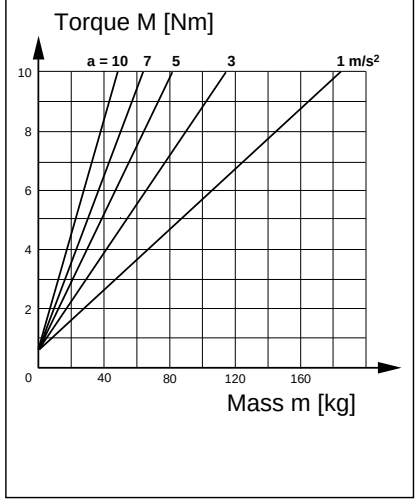

Size OSP-E50, Vertical Application

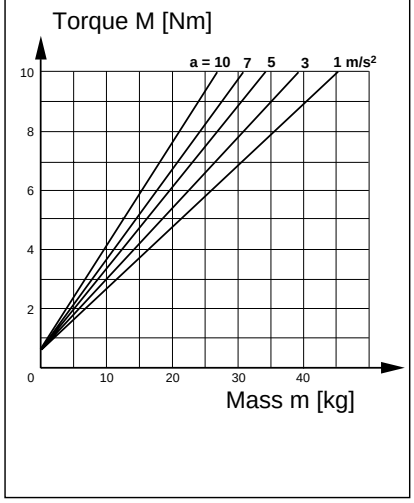

Belt Driven Linear Actuator - Basic Unit
Series OSP-E25BP, -E32BP, -E50BP

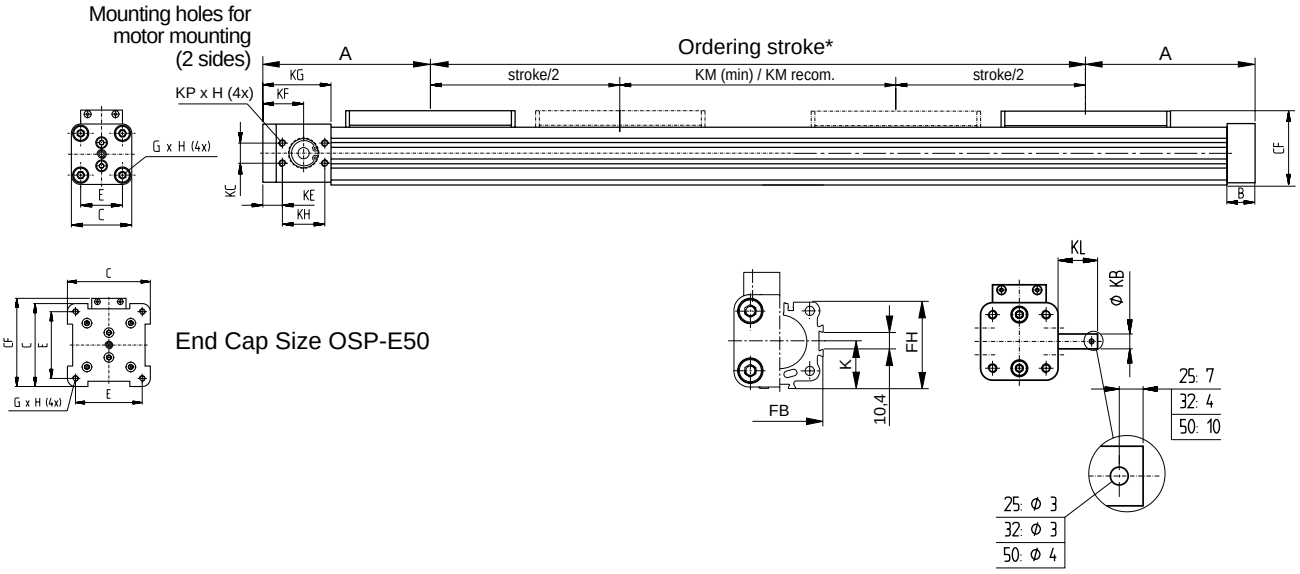

(For options on drive shaft, see ordering information on data sheet 1.25.002E-7)

*** The end of stroke must not be used as a mechanical stop. Add to both ends, a minimum extra length, corresponding to the linear motion per one revolution of the drive shaft. The use of AC motor with frequency converter drives normally requires a larger 'extra length' than that required for servo systems. For advise, please contact your local HOERBIGER-ORIGA technical support department.**

Standard Carrier Mounting
Series OSP-E25, -E32, -E50

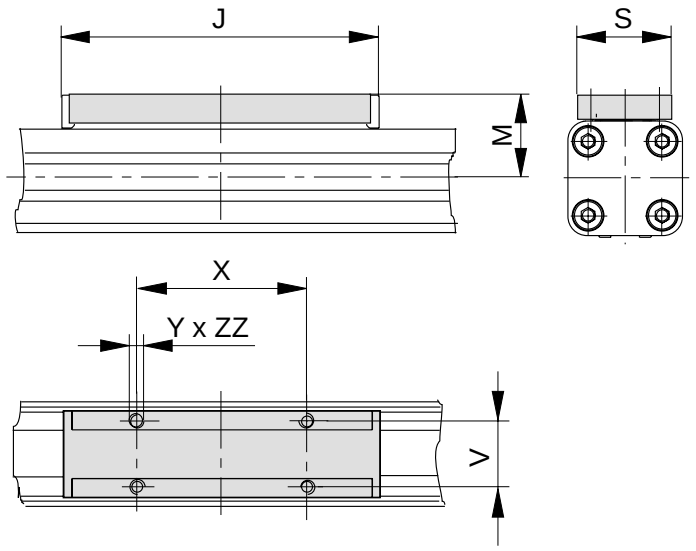

Dimension KM (mm)

Size	KM_{min}	$KM_{rec.}$
25	130	190
32	170	230
50	220	320

Dimension Table (mm)

Series	A	B	C	E	G	H	J	K	M	S	V	X	Y	CF	FB	FH	KB	KC	KE	KF	KG	KH	KJ	KL	KM_{min}	KP	ZZ
OSP-E25BP	125	22	41	27	M5	10	117	21.5	31	33	25	65	M5	52.5	40	39.5	10_{j6}	15	22	37	57	30	19^{H7}	24	130	M5	8
OSP-E32BP	150	25	52	36	M6	12	152	28.5	38	36	27	90	M6	66.5	52	51.7	10_{j6}	18	17.5	36.5	61	38	26^{H7}	26	170	M6	10
OSP-E50BP	200	25	87	70	M6	12	200	43	49	36	27	110	M6	92,.5	76	77	16_{h8}	32	23.5	48.5	85	50	40^{H7}	34	220	M8	10

Electric Linear Actuator

OSP-E	25 –	0	0	0	0	2 –	00500

Size

25 = Size 25
32 = Size 32
50 = Size 50

Actuator

0 = Belt-driven

Carrier Mounting

0 = Standard
1 = Tandem
(Option, please contact customer support)

Drive Shaft Options

0 = (Standard)

1 = 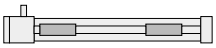

2 =

Stroke

Input (five digits) in mm

Option

2 = Bi-parting (BP)

Gearbox

0 = Without gearbox

Accessories - please order separately

Description	Further information see Data Sheet No.
Clevis Mounting	**1.45.021E**
End Cap Mountings	**1.45.022E**
Mid-Section Support	**1.45.023E**
Inversion Mounting	**1.45.025E**
Adaptor Profile	**1.45.026E**
T-Nut Profile	**1.45.027E**
Coupling Housing (for motor)	**1.45.028E**
Proximity Sensors	**1.45.100E**
Stepper Motor and Controller	**see Catalogue A4P019E**
Servo Motor and Controller	**see Catalogue A4P019E**

Linear Actuator with Ball Screw
Series OSP-E..S

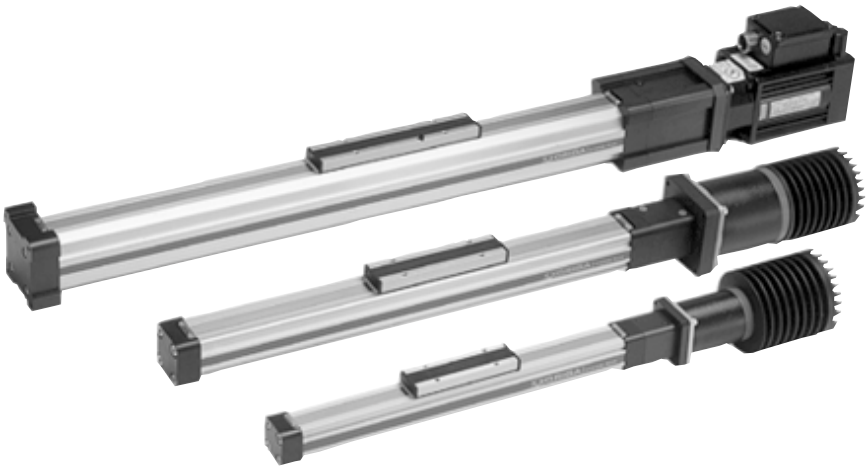

Contents

Description	Data Sheet No.	Page
Overview	1.30.001	45-48
Technical Data	1.30.002-1 to 5	49-53
Dimensions	1.30.002-6	54
Order Instructions	1.30.002-7	55

ELECTRIC LINEAR ACTUATOR FOR HIGH ACCURACY APPLICATIONS

A completely new generation of linear drives which can be integrated into any machine layout neatly and simply.

Linear Actuator with Ball Screw

Advantages:

- Accurate path and position control
- High force output
- Easy installation
- Low maintenance
- Excellent slow speed characteristics
- Ideal for precise traverse operations (e.g. machine feeds) and lifting applications

Features:

- Integrated drive and guidance system
- Complete motor and control packages
- Diverse range of accessories and mountings
- Optimal screw pitches (5, 10, 25 and 50 mm)

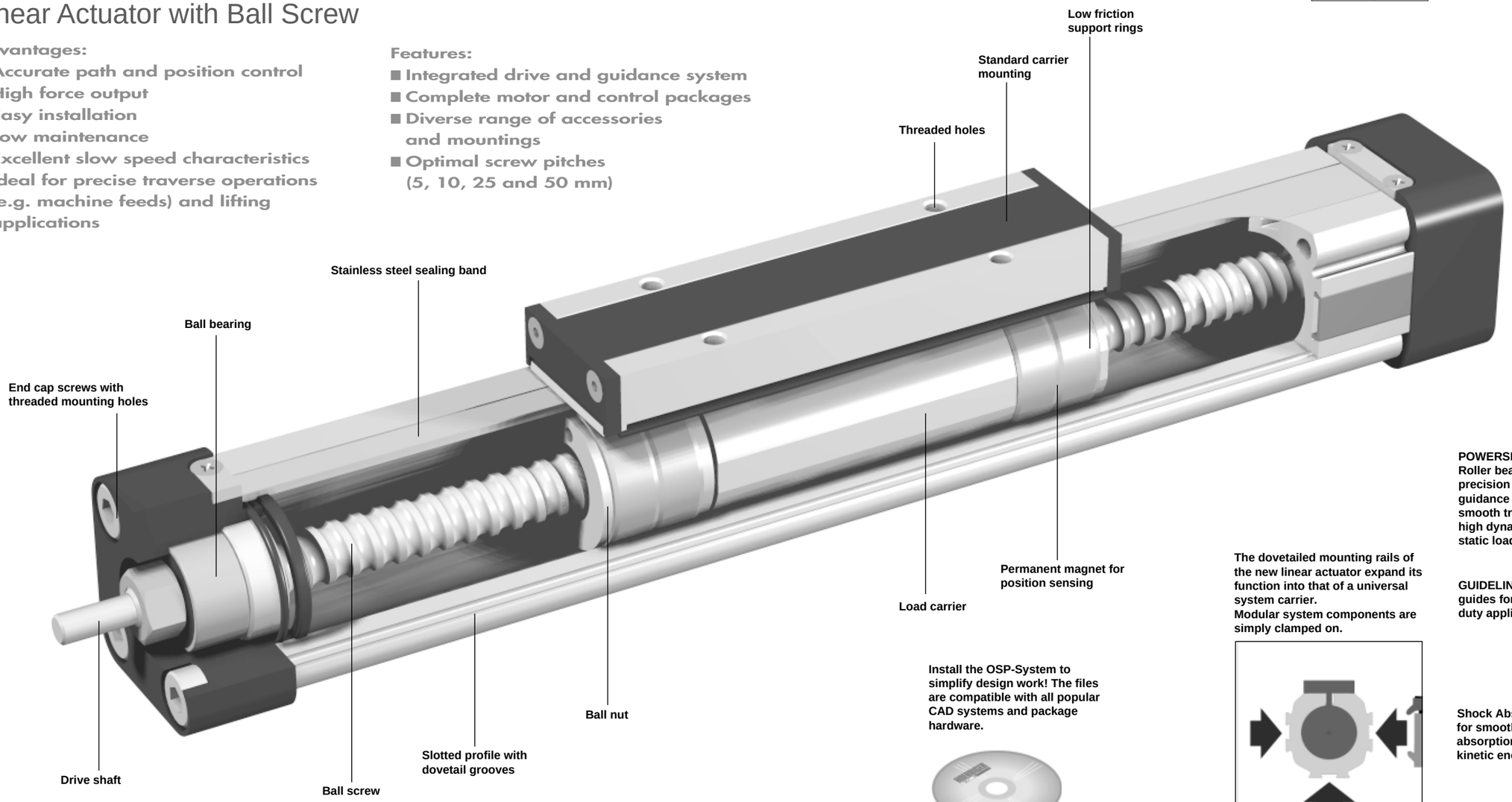

PROLINE
The compact aluminium roller guide for high loads and velocities.

SLIDELINE
Combination with linear guides provides for heavier loads.

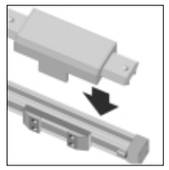

POWERSLIDE
Roller bearing precision guidance for smooth travel and high dynamic or static loads.

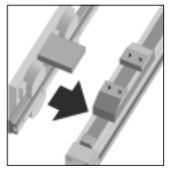

GUIDELINE linear guides for heavy duty applications

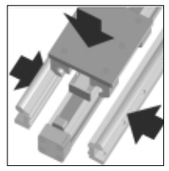

Shock Absorbers for smooth absorption of kinetic energy.

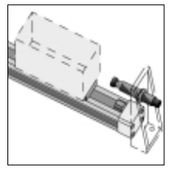

The dovetailed mounting rails of the new linear actuator expand its function into that of a universal system carrier.
Modular system components are simply clamped on.

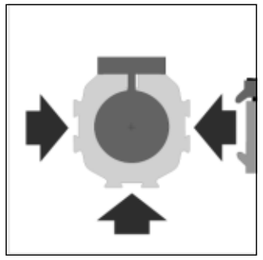

Install the OSP-System to simplify design work! The files are compatible with all popular CAD systems and package hardware.

OPTIONS AND ACCESSORIES

SERIES OSP-E, SCREW-DRIVEN

STANDARD VERSIONS OSP-E..S

Data Sheet 1.30.002E

Standard carrier with integral guidance. Dovetail profile for mounting of accessories and the actuator itself.

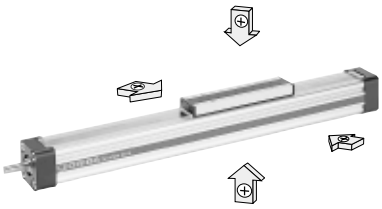

BASIC ACTUATOR OPTIONS

BALL SCREW PITCH

The ball screws are available in various pitches. OSP-E25 in 5 mm, OSP-E32 in 5 or 10 mm and OSP-E50 in 5, 10, 25, 50 mm pitch.

MOUNTINGS FOR OSP-E25 TO E50

CLEVIS MOUNTING

Data Sheet 1.45.021E

Carrier mounting for driving loads supported by external linear guides.

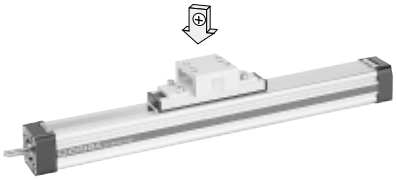

END CAP MOUNTING
Data Sheet 1.45.022E

For end-mounting of the actuator

MID-SECTION SUPPORT

Data Sheet 1.45.023E

For supporting long actuators or mounting the actuator on the dovetail grooves.

INVERSION MOUNTING

Data Sheet 1.45.025E
The inversion mounting, mounted on the carrier, transfers the driving force to the opposite side, e.g. for dirty environments.

ACCESSORIES

PROXIMITY SENSOR
SERIES RS AND ES

Data Sheet 1.45.101E
For electrical sensing of end and intermediate carrier positions.

MOTOR MOUNTINGS

Data Sheet 1.45.029E

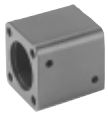

A3P107E00DZ00X

The right to introduce technical modifications is reserved

Linear Actuator with Ball Screw

Series OSP-E..S
Size 25, 32, 50

OSP
ORIGA SYSTEM PLUS

Characteristics

Characteristics		Symbol	Unit	Description
General Features				
Type				Linear Actuator with Ball Screw
Series				OSP-E..S
Mounting				See drawings
Operating temperature range		ϑ_{min} ϑ_{max}	°C °C	-20 +80
Weight (mass)			kg	See table
Installation				In any position
Material	Slotted profile			Extruded anodized aluminium
	Ball screw			Hardened steel
	Ball nut			Hardened steel
	Sealing band			Hardened stainless steel
	Guide bearings			Low friction plastic
	Screws, nuts			Zinc plated steel
	Mountings			Zinc plated steel and aluminium
Encapsulation class			IP	54

Weight (mass) kg and Inertia

Series	Weight (mass)[kg]			Inertia [x 10^{-6} kgm^2]	
	At stroke 0 m	Add per metre stroke	Moving mass	At stroke 0 m	Add per metre
OSP-E25S	0.8	2.3	0.2	2.2	11.3
OSP-E32S	2.0	4.4	0.4	8.4	32
OSP-E50S	5.2	9.4	1.2	84	225

Standard Version:

- Standard carrier with own internal guidance
- Dovetail grooves for mounting accessories and the drive itself
- Travel per rotation of threaded spindle:
  Type OSP-E25 : 5 mm
  Type OSP-E32: 5 ,10 mm
  Type OSP-E50: 5 ,10, 25, 50 mm

A1P560E00DZ00X

Installation Instructions

Use the threaded holes in the free end cap and a mid-section support close to the motor end for mounting the linear actuator.
See if mid-section supports are needed using the maximum allowable un-supported length graph on data sheet 1.30.002E-3. At least one end cap must be secured to prevent axial sliding when mid-section support is used (see data sheet 1.45.023E).
When the linear actuator is moving an externally guided load, the clevis mounting should be used.
The linear actuators can be fitted with the standard carrier mounting facing in any direction.
To prevent contamination such as fluid ingress, the actuator should be fitted with its sealing band facing downwards.
The inversion mounting can be fitted to transfer the driving force to the opposite side (see data sheet 1.45.025E).

Maintenance

All moving parts are long-term lubricated for a normal operational environment. We recommend a check and lubrication of the linear actuator, and if necessary a change of worn parts, after every 24th month or 3000 km travel of distance, depending on the type of application. Please see separate instructions.

Start Up

The products in this datasheet should not be operated until the machine/ application in which they are used has passed necessary inspection.

The right to introduce technical modifications is reserved

For **linear guides** see 1.40.020E to 024E
For **proximity sensors** see 1.45.101E,
For **mountings** and **accessories** see 1.45.020E to 029E

HOERBIGER ORIGA

Sizing Performance Overview Maximum Loadings

Sizing of Linear Actuator

The following steps are recommended for selection :

1. Recommended maximum acceleration is shown in graphs on data sheet 1.30.002E-4.
2. Required torque is shown in graphs on data sheet 1.30.002E-5.
3. Check that maximum values in the adjacent charts are not exceeded.
4. When sizing and specifying the motor, the RMS-average torque must be calculated using the cycle time of the application.
5. Check that the maximum allowable unsupported length is not exceeded (see on data sheet 1.30.002E-3).

Performance Overview

Characteristics	Unit	Description						
Series		**OSP-E25S**	**OSP-E32S**		**OSP-E50S**			
Pitch	[mm]	5	5	10	5	10	25	50
Max. speed	[m/s]	0.25	0.25	0.5	0.25	0.5	1.25	2.50
Linear motion per revolution, drive shaft	[mm]	5	5	10	5	10	25	50
Max. rpm, drive shaft	[min^{-1}]	3 000	3 000		3 000			
Max. effective action force F_A	[N]	250	600		1 500			
Corresponding torque on drive shaft	[Nm]	0.35	0.75	1.3	1.7	3.1	7.3	14.6
Max. allowable torque on drive shaft	[Nm]	0.6	1.5	2.8	4.2	7.5	20	20
Typical repeatability	[mm/m]	±0.05	±0.05		±0.05			
Max. Standard stroke length	[m]	1.1	2.0		3.2			

Maximum Allowable Loadings

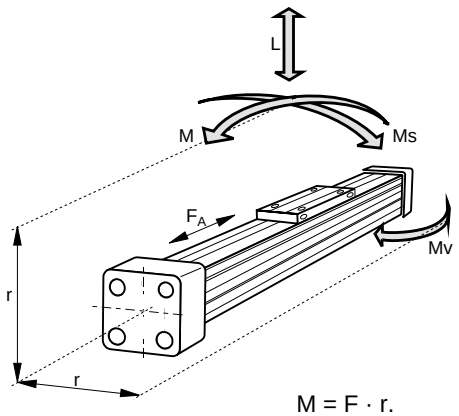

M = F · r.
Bending moments are calculated from the centre of the linear actuator and F indicates actual force.

Size	Max. applied load [N] L	Max. moments [Nm] M	M_s	M_v
OSP-E25	500	12	2	8
OSP-E32	1 200	25	8	16
OSP-E50	3 000	80	16	32

Combined Loadings.
If several forces and moments are applied to the linear actuator simultaneously, then the following equation must be fulfilled in addition to the above stated maximum loadings.

$$\frac{L}{L\,(max)} + \frac{M}{M\,(max)} + \frac{M_s}{M_s\,(max)} + \frac{M_v}{M_v\,(max)} \leq 1$$

Maximum Allowable Unsupported Length – Placing of Mid-Section Support

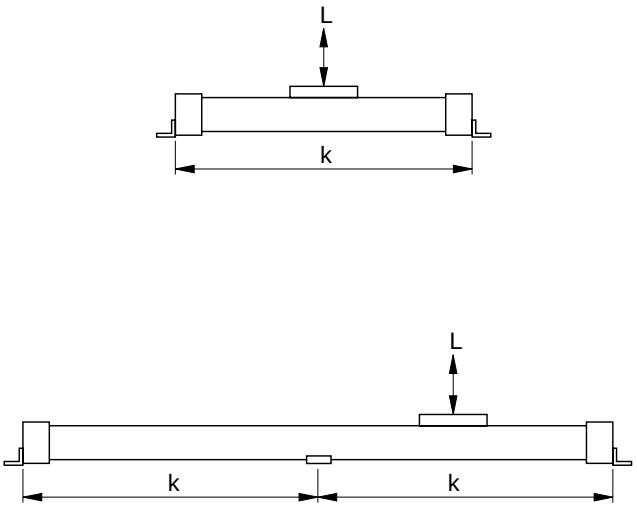

k = Maximum allowable distance between mountings/mid-section support for a given load (L)

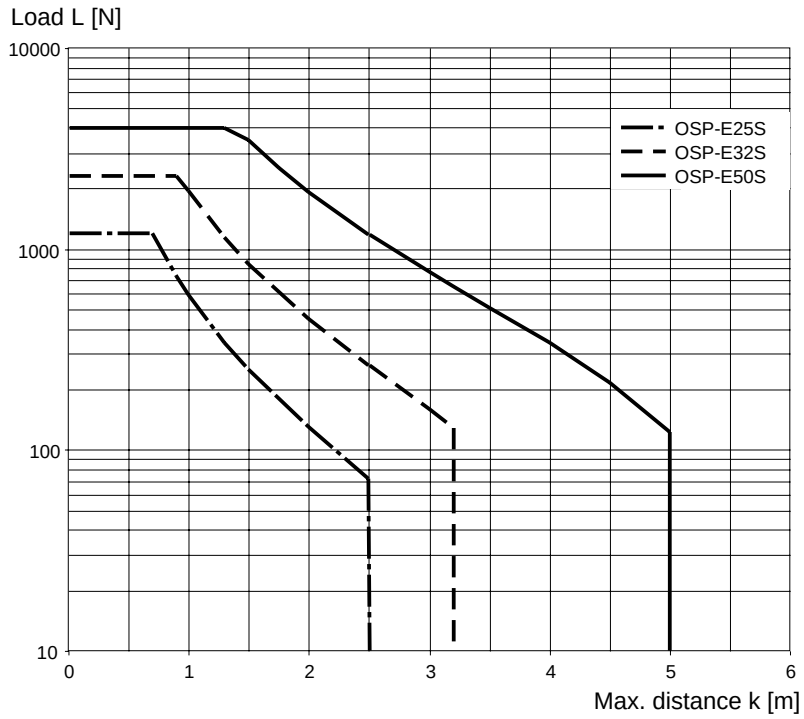

When loadings are below or up to the curve in the above graph the deflection will be max. 0,2 % of distance k.)
Also note maximum applied load in the chart on data sheet 1.30.002E-2.

Maximum Allowable Unsupported Length

Stroke Length

Stroke Lengths

The stroke lengths of the linear actuators are available in multiples of 1 mm up to 1100 mm for size 25 , up to 2000 mm for size 32 and up to 3200 mm for size 50. Other stroke lengths are available on request.

The end of stroke must not be used as a mechanical stop.
Add to both ends, a minimum extra length of 25 mm to the stroke.
The use of AC motor with frequency converter drives normally requires a larger 'extra length' than that required for servo systems.
For advise, please contact your local HOERBIGER-ORIGA technical support department.

When mechanical stops are required, external shock absorbers should be used (see separate catalogue).
Align the centreline of the shock absorber as closely as possible with the object's centre of gravity.

Mounting on the Drive Shaft

Do not expose the drive shaft to uncontrolled axial or radial forces when mounting coupling or belt wheel, a steadying block should be used.

Belt wheels

Minimum allowable number of teeth (AT5) and diameter of belt wheel at maximum applied torque.

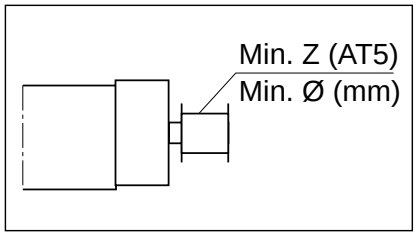

Size	Min. Z	Min. Ø
OSP-E25S	24	38
OSP-E32S	24	38
OSP-E50S	36	57

Maximum rpm – Stroke

At longer strokes the speed has to be reduced according to the adjacent graphs.

Maximum rpm —Stroke

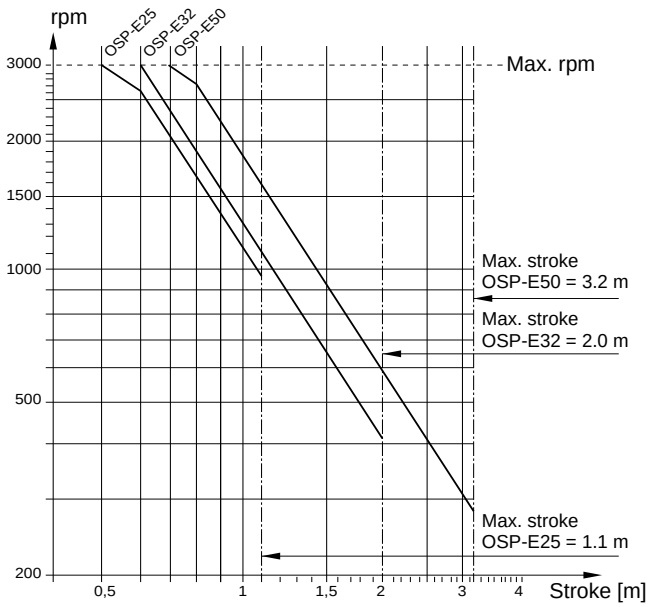

The maximum rpm shown in the graph, is 80% of the critical rpm.

Distance-Time Graph

The adjacent graphs show travel distance and total time at maximum speed and recommended maximum acceleration. The graph assumes that acceleration and deceleration are equal.

Distance-Time Graph

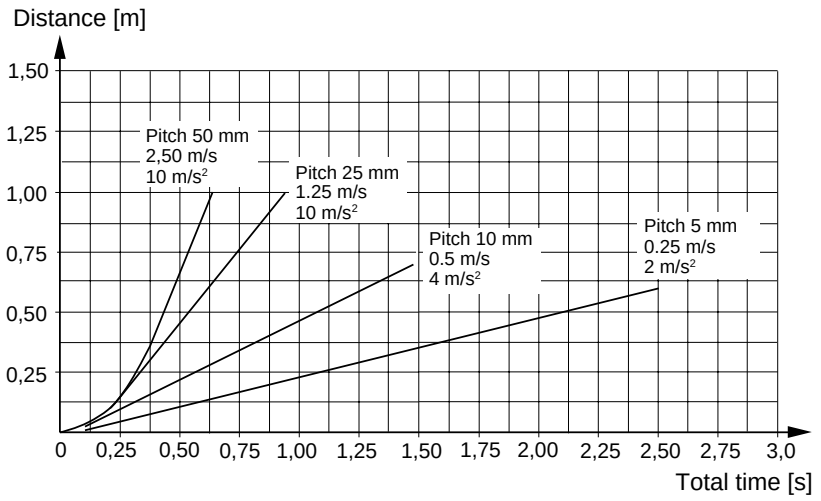

Required Torque

Using the known mass, the direction of the application and the recommended acceleration, the linear actuator can be sized and the required torque is shown in the adjacent graphs.
Mass in graphs = Load + moving mass of the linear actuator according to the weight chart (see on data sheet 1.30.002E-1).

Please note:
When using an additional guide, please add the mass of carriage to the total moving mass.

Size OSP-E25, Pitch 5 mm
Acceleration 2 m/s²

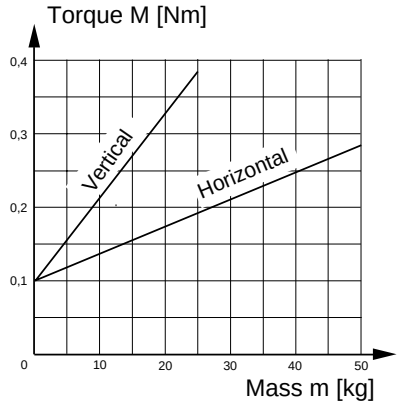

Size OSP-E32, Pitch 5 mm
Acceleration 2 m/s²

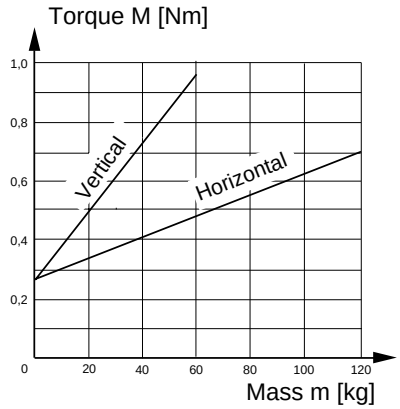

Size OSP-E32, Pitch 10 mm
Acceleration 4 m/s²

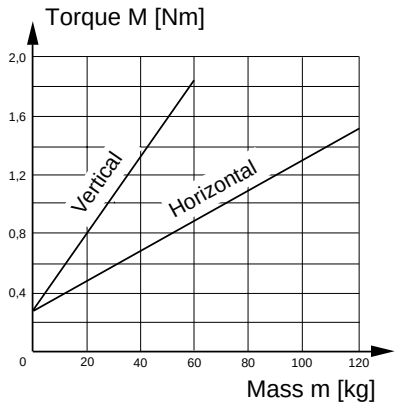

Size OSP-E50, Pitch 5 mm
Acceleration 2 m/s²

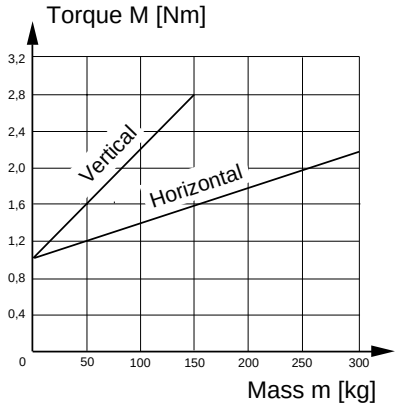

Size OSP-E50, Pitch 10 mm
Acceleration 4 m/s²

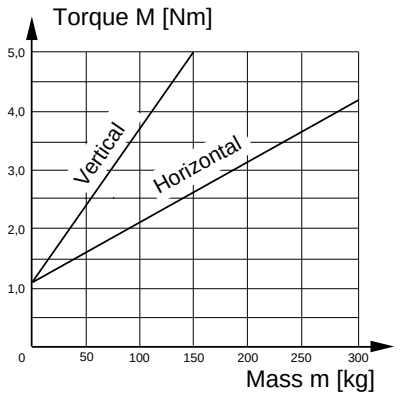

Size OSP-E50, Pitch 25 and 50 mm
Acceleration 10 m/s²

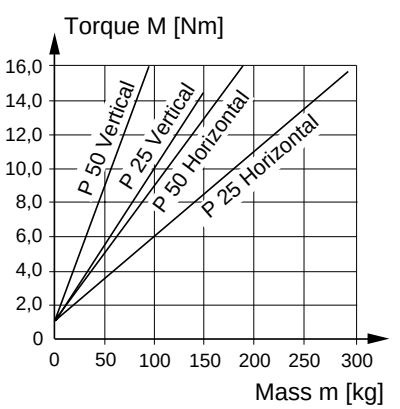

Screw-Driven Linear Actuator – Basic Unit
Series OSP-E25S, -E32S, -E50S

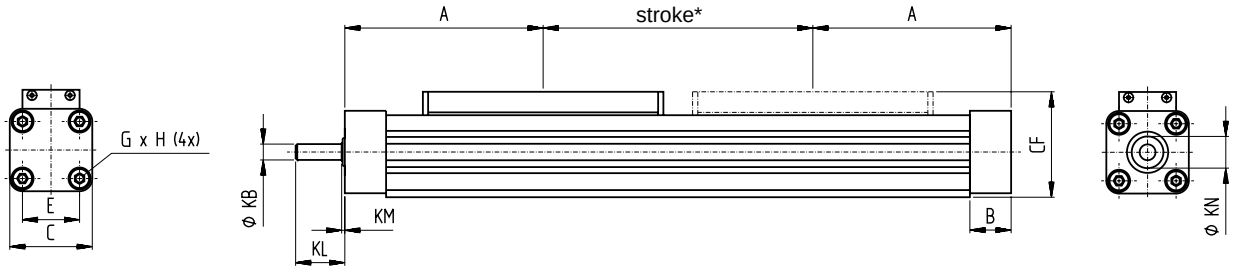

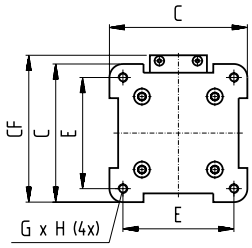

End Cap Size OSP-E50

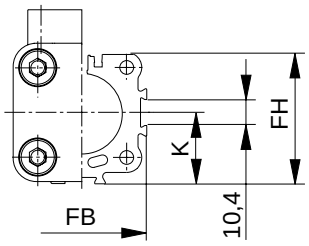

*** The end of stroke must not be used as a mechanical stop. Add to both ends, a minimum extra length of 25 mm to the stroke.**
The use of AC motor with frequency converter drives normally requires a larger 'extra length' than that required for servo systems.
For advise, please contact your local HOERBIGER-ORIGA technical support department.

Standard Carrier Mounting
Series OSP-E25S, -E32S, -E50S

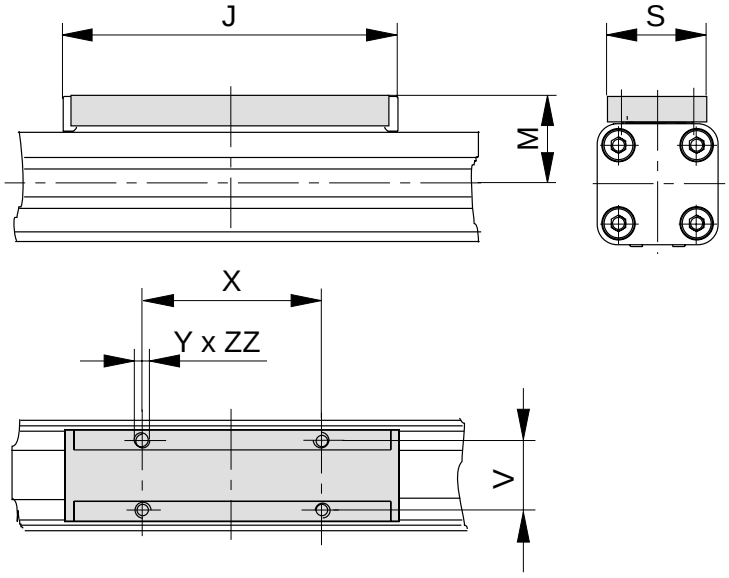

Dimension Table (mm)

Series	A	B	C	E	G	H	J	K	M	S	V	X	Y	CF	FB	FH	KB	KL	KM	KN	ZZ
OSP-E25S	100	22	41	27	M5	10	117	21.5	31	33	25	65	M5	52.5	40	39.5	6_{h7}	17	2	13	8
OSP-E32S	125	25.5	52	36	M6	12	152	28.5	38	36	27	90	M6	66.5	52	51.7	10_{h7}	31	2	20	10
OSP-E50S	175	33	87	70	M6	12	200	43	49	36	27	110	M6	92.5	76	77	15_{h7}	43	3	28	10

Order Instruction – Basic Electric Linear Actuator OSP-E..S

Electric Linear Actuator

	OSP-E	25 –	1	0	3	0	0 –	00500	

Size

25 = Size 25
32 = Size 32
50 = Size 50

Actuator

1 = Screw-driven (S)

Carrier Mounting

0 = Standard
1 = Tandem
(Option, please contact customer support)

Drive Options

3 = Pitch 5 mm (Size 25/32/50)
4 = Pitch 10 mm (Size 32/50)
5 = Pitch 25 mm (Size 50)
6 = Pitch 50 mm (Size 50)

Stroke

Input (five digits) in mm

Open Option

0 = Not defined

Gearbox

0 = Without gearbox

Accessories - please order separately

Description	Further information see Data Sheet No.
Clevis Mounting	**1.45.021E**
End Cap Mountings	**1.45.022E**
Mid-Section Support	**1.45.023E**
Inversion Mounting	**1.45.025E**
Adapter Profile	**1.45.026E**
T-Nut Profile	**1.45.027E**
Coupling Housing (for motor)	**1.45.029E**
Proximity Sensors	**1.45.101E**
3-Phase Stepper Motor and Controller	**see Catalogue A4P019E**
AC-Servo Motor and Controller	**see Catalogue A4P019E**

Linear Actuator with Trapezoidal Screw
Series OSP-E..ST

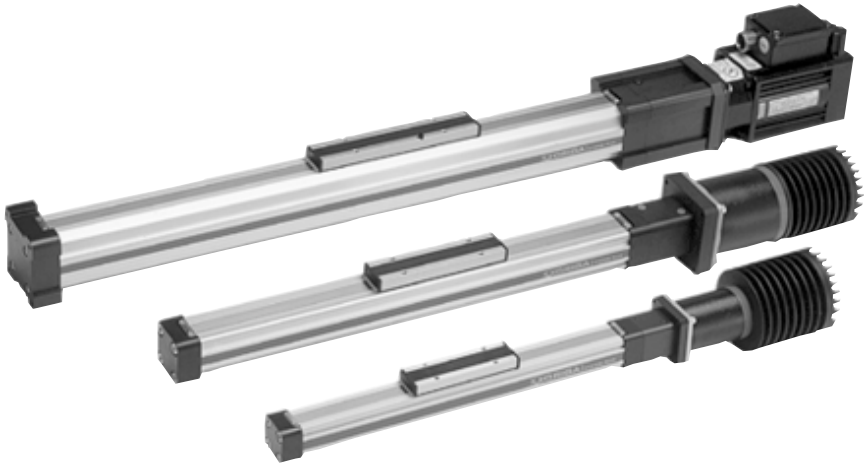

Contents

Description	Data Sheet No.	Page
Overview	1.35.001	57-60
Technical Data	1.35.002-1 to 4	61-64
Dimensions	1.35.002-5	65
Order Instructions	1.35.002-6	66

ELECTRIC LINEAR ACTUATOR FOR INTERMITTENT APPLICATIONS

A completely new generation of linear drives which can be integrated into any machine layout neatly and simply.

Linear Actuator with Trapezoidal Screw

Advantages:
- Accurate path and position control
- High force output
- Self-locking
- Excellent slow speed characteristics
- Easy installation
- Low maintenance
- Ideal for level regulation, lifting and other applications with intermittent operations

Features:
- Complete motor and control packages
- Diverse range of accessories and mountings
- Special options available

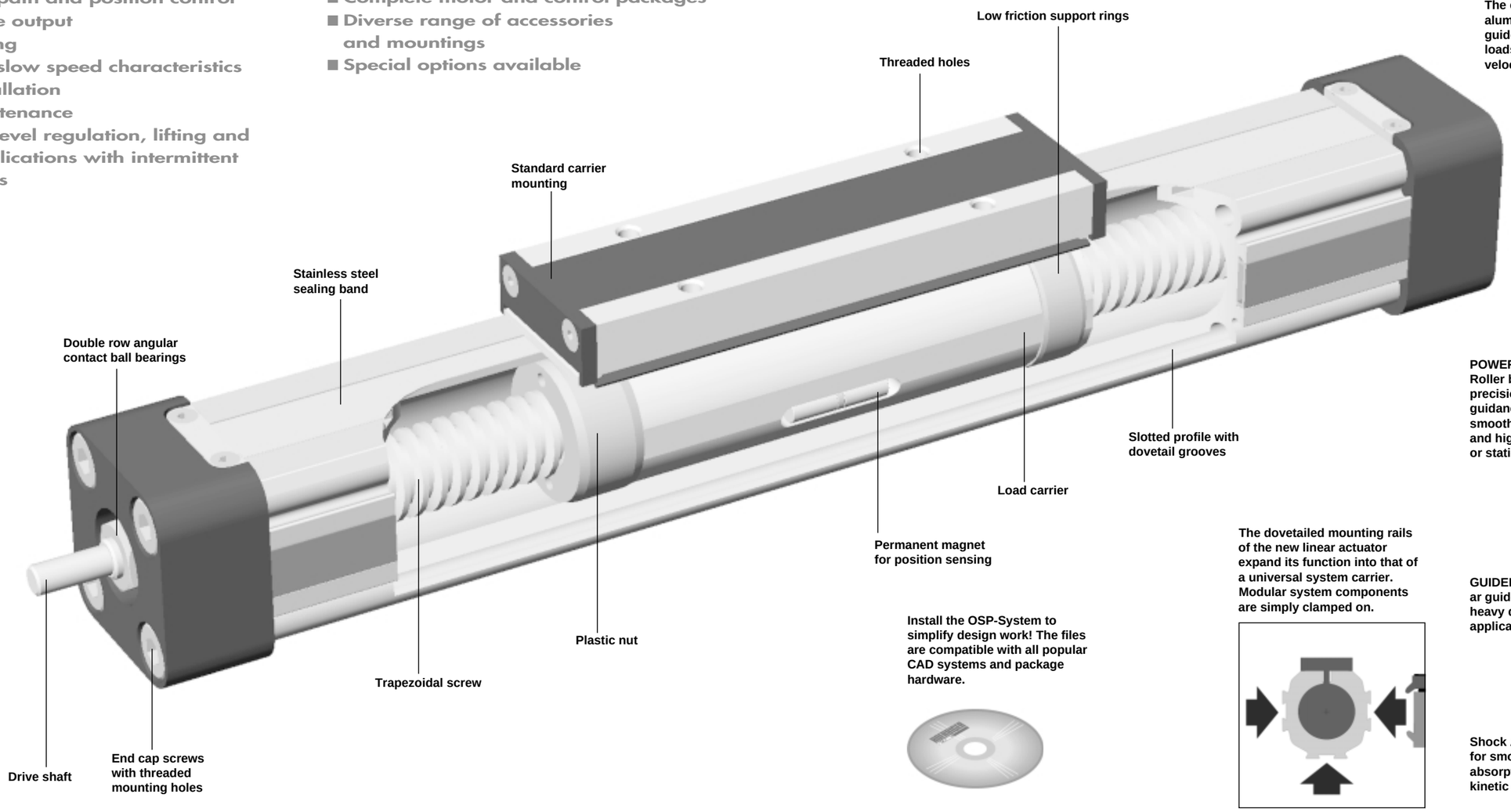

SLIDELINE
Combination with linear guides provides for heavier loads.

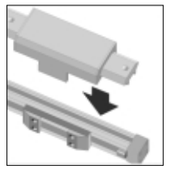

PROLINE
The compact aluminium roller guide for high loads and velocities.

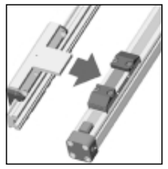

POWERSLIDE
Roller bearing precision guidance for smooth travel and high dynamic or static loads.

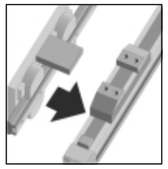

GUIDELINE linear guides for heavy duty applications

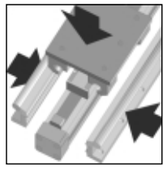

Shock Absorbers for smooth absorption of kinetic energy.

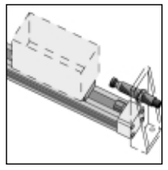

Install the OSP-System to simplify design work! The files are compatible with all popular CAD systems and package hardware.

The dovetailed mounting rails of the new linear actuator expand its function into that of a universal system carrier. Modular system components are simply clamped on.

OPTIONS AND ACCESSORIES

SERIES OSP-E, TRAPEZOIDAL SCREW DRIVEN

STANDARD VERSIONS OSP-E..S

Data Sheet 1.35.002E-1, -2

Standard carrier with integral guidance. Dovetail profile for mounting of accessories and the actuator itself.

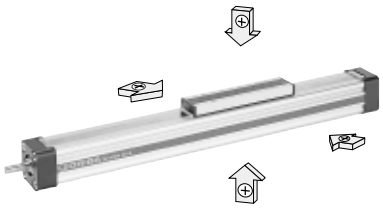

MOUNTINGS FOR OSP-E25 TO E50

CLEVIS MOUNTING

Data Sheet 1.45.021E

Carrier mounting for driving loads supported by external linear guides.

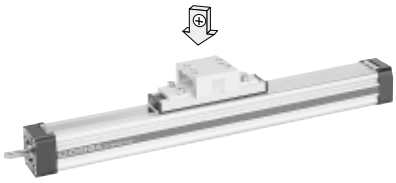

END CAP MOUNTING
Data Sheet 1.45.022E

For end-mounting of the actuator

MID-SECTION SUPPORT

Data Sheet 1.45.023E

For supporting long actuators or mounting the actuator on the dovetail grooves.

INVERSION MOUNTING

Data Sheet 1.45.025E
The inversion mounting, mounted on the carrier, transfers the driving force to the opposite side, e.g. for dirty environments.

ACCESSORIES

PROXIMITY SENSOR SERIES RS AND ES

Data Sheet 1.45.101E
For electrical sensing of end and intermediate carrier positions.

MOTOR MOUNTINGS

Data Sheet 1.45.029E

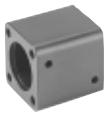

A3P154E00IZ50X

The right to introduce technical modifications is reserved

Linear Actuator with Trapezoidal Screw

Series OSP-E..ST
Size 25, 32, 50

OSP
ORIGA SYSTEM PLUS

Characteristics

Characteristics		Symbol	Unit	Description
General Features				
Type				Linear Actuator with Trapezoidal Screw
Series				OSP-E..ST
Mounting				See drawings
Operating temperature range		ϑ_{min} ϑ_{max}	°C °C	-20 +70
Weight (mass)			kg	See table
Installation				In any position
Material	Slotted profile			Extruded anodized aluminium
	Trapezoidal screw			Cold rolled steel
	Drive nut			Thermoplastic polyester
	Sealing band			Hardened stainless steel
	Guide bearings			Low friction plastic
	Screws, nuts			Zinc plated steel
	Mountings			Zinc plated steel and aluminium
Encapsulation class			IP	54

Weight (mass) kg and Inertia

Series	Weight (mass)[kg]			Inertia [x 10^{-6} kgm^2]	
	At stroke 0 m	Add per metre stroke	Moving mass	At stroke 0 m	Add per metre
OSP-E25ST	0.9	2.8	0.2	6	29.6
OSP-E32ST	2.1	5.0	0.5	21.7	81
OSP-E50ST	5.1	10.6	1.3	152	400

Standard Version:

- Standard carrier with own internal guidance
- Dovetail grooves for mounting accessories and the drive itself
- Travel per rotation of threaded spindle:
  Type OSP-E25ST : 4 mm
  Type OSP-E32ST: 4 mm
  Type OSP-E50ST: 6 mm

Installation Instructions

Use the threaded holes in the free end cap and a mid-section support close to the motor end for mounting the linear actuator.
See if mid-section supports are needed using the maximum allowable un-supported length graph on data sheet 1.35.002E-3. At least one end cap must be secured to prevent axial sliding when mid-section support is used (see data sheet 1.45.023E).
When the linear actuator is moving an externally guided load, the clevis mounting should be used.
The linear actuators can be fitted with the standard carrier mounting facing in any direction.
To prevent contamination such as fluid ingress, the actuator should be fitted with its sealing band facing downwards.
The inversion mounting can be fitted to transfer the driving force to the opposite side (see data sheet 1.45.025E).

Maintenance

All moving parts are long-term lubricated for a normal operational environment. We recommend a check and lubrication of the linear actuator, and if necessary a change of worn parts, after every 24th month or 300 km travel of distance, depending on the type of application.
Please see separate instructions.

Start Up

The products in this datasheet should not be operated until the machine/ application in which they are used has passed necessary inspection.

For **linear guides** see 1.40.020E to 024E
For **proximity sensors** see 1.45.101E,
For **mountings** and **accessories** see 1.45.020E to 029E

HOERBIGER ORIGA

A1P639E00IZ00X

The right to introduce technical modifications is reserved

Sizing
Performance Overview
Maximum Loadings

Sizing of Linear Actuator

The following steps are recommended for selection :

1. Check that maximum values in the adjacent charts are not exceeded.
2. Check the maximum values in graph on data sheet 1.35.002E-4 are not exceeded.
3. When sizing and specifying the motor, the RMS-average torque must be calculated using the cycle time of the application.
4. Check that the maximum allowable unsupported length is not exceeded (see on data sheet 1.35.002E-3).

Performance Overview

Characteristics	Unit	Description		
Series		**OSP-E25ST**	**OSP-E32ST**	**OSP-E50ST**
Pitch	[mm]	4	4	6
Max. speed	[m/s]	0.1	0.1	0.15
Linear motion per revolution, drive shaft	[mm]	4	4	6
Max. rpm, drive shaft	[min^{-1}]	1500	1500	1500
Max. effective action force F_A Corresponding torque on drive shaft	[N] [Nm]	600 1.35	1300 3.2	2 500 8.8
No-load torque	[Nm]	0.3	0.4	0.5
Max. allowable torque on drive shaft	[Nm]	1.55	4.0	9.4
Self-locking force F_L [1)]	[N]	600	1300	2500
Typical repeatability	[mm/m]	±0.5	±0.5	±0.5
Max. Standard stroke length	[m]	1.1	2.0	2.5 *

[1)] Related to screw types Tr 16x4, Tr 20x4, TR 30x6
see data sheet 1.35.002E-1 – for inertia

* For strokes longer than 2000 mm in horizontal apllications, please contact our customer support

Maximum Allowable Loadings

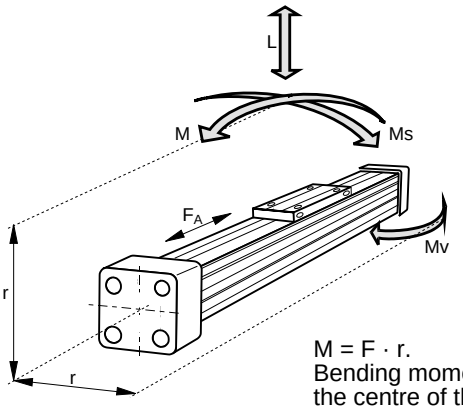

M = F · r.
Bending moments are calculated from the centre of the linear actuator and F indicates actual force.

Size	Max. applied load [N] L	Max. moments [Nm] M	M_s	M_v
OSP-E25ST	500	24	2	7
OSP-E32ST	1000	65	6	12
OSP-E50ST	1500	155	13	26

Combined Loadings.
If several forces and moments are applied to the linear actuator simultaneously, then the following equation must be fulfilled in addition to the above stated maximum loadings.

$$\frac{L}{L\,(max)} + \frac{M}{M\,(max)} + \frac{M_s}{M_s\,(max)} + \frac{M_v}{M_v\,(max)} \leq 1$$

Maximum Allowable Unsupported Length – Placing of Mid-Section Support

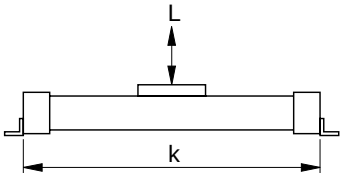

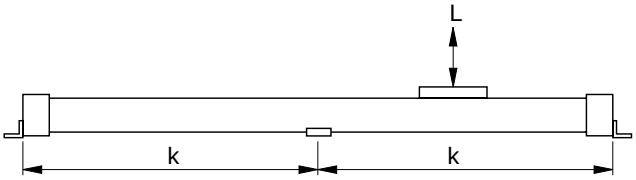

k = Maximum allowable distance between mountings/mid-section support for a given load (L)

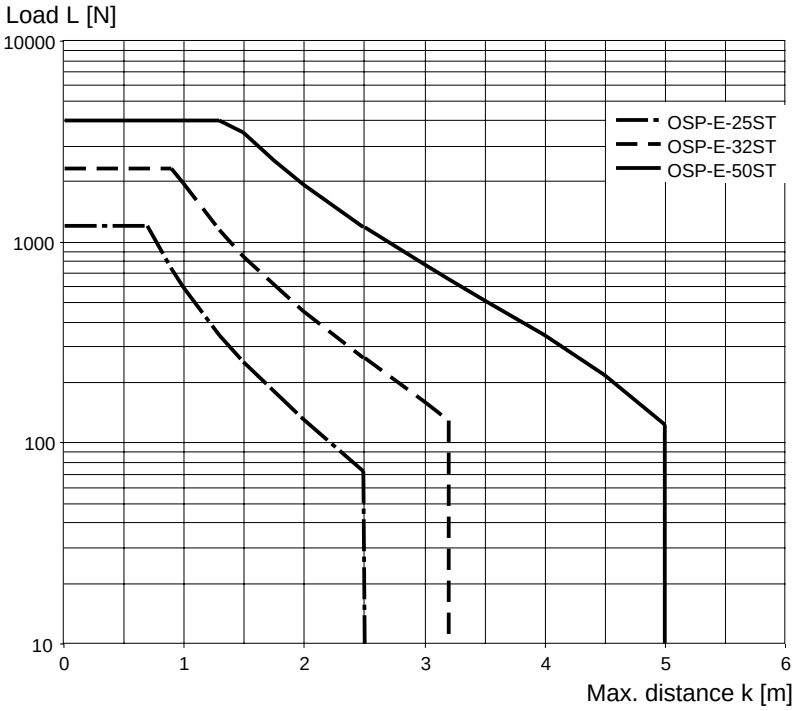

When loadings are below or up to the curve in the above graph the deflection will be max. 0,2 % of distance k.)
Also note maximum applied load in the chart on data sheet 1.35.002E-2.

Maximum Allowable Unsupported Length

Stroke Length

Stroke Lengths

The stroke lengths of the linear actuators are available in multiples of 1 mm up to 1100 mm for size 25 , up to 2000 mm for size 32 and up to 2500 mm for size 50.

Other stroke lengths are available on request.

For strokes longer than 2000 mm in horizontal apllications, please contact our customer support

The end of stroke must not be used as a mechanical stop.
Add to both ends, a minimum extra length of 25 mm to the stroke.
The use of AC motor with frequency converter drives normally requires a larger 'extra length' than that required for servo systems.
For advise, please contact your local HOERBIGER-ORIGA technical support department.

When mechanical stops are required, external shock absorbers should be used (see separate catalogue).
Align the centreline of the shock absorber as closely as possible with the object's centre of gravity.

Mounting on the Drive Shaft

Do not expose the drive shaft to uncontrolled axial or radial forces when mounting coupling or belt wheel, a steadying block should be used.

Belt wheels

Minimum allowable number of teeth (AT5) and diameter of belt wheel at maximum applied torque.

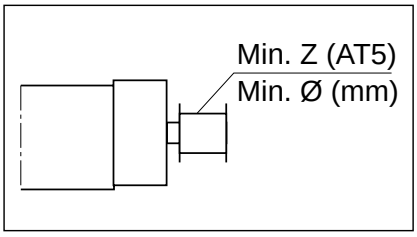

Size	Min. Z	Min. ø
OSP-E25ST	24	38
OSP-E32ST	24	38
OSP-E50ST	36	57

Action Force vs. intermittent travel distance

The actuators are designed for a 10% intermittent usage.
A more frequent usage will decrease lifetime depending on load and internal temperature conditions.

Action Force vs. intermittent travel distance

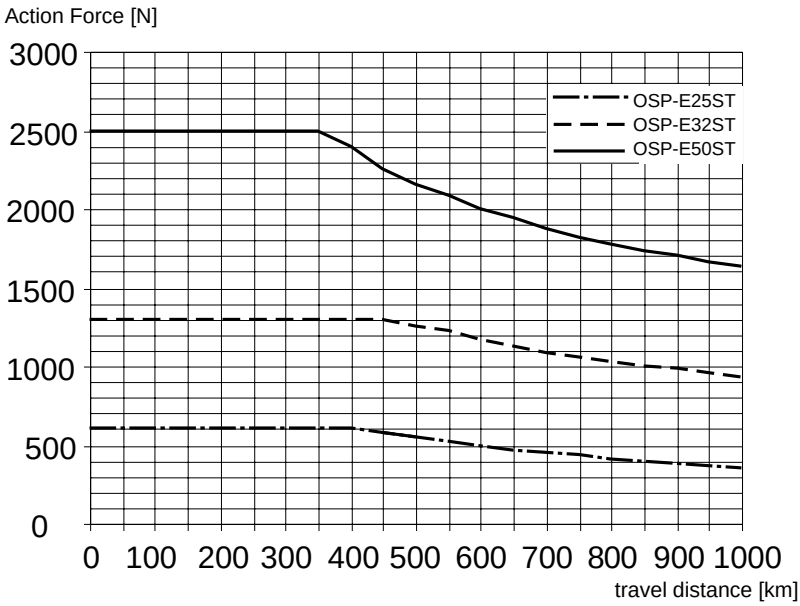

Note: Graph above is based upon 10% intermittent usage

Maximum rpm – Stroke

At longer strokes the speed has to be reduced according to the adjacent graphs.

Maximum rpm — Stroke

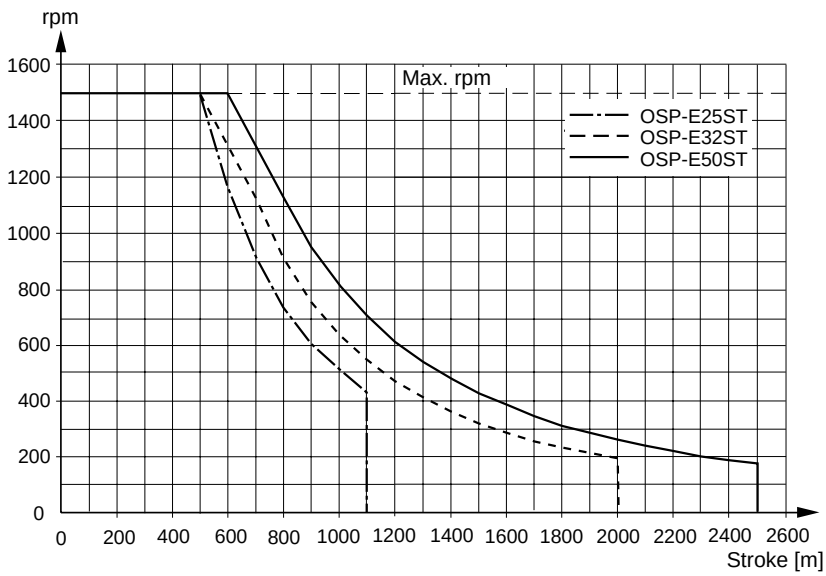

The maximum rpm shown in the graph, is 80% of the critical rpm.

Trapezoidal Screw Driven – Basic Unit
Series OSP-E25ST, -E32ST, -E50ST

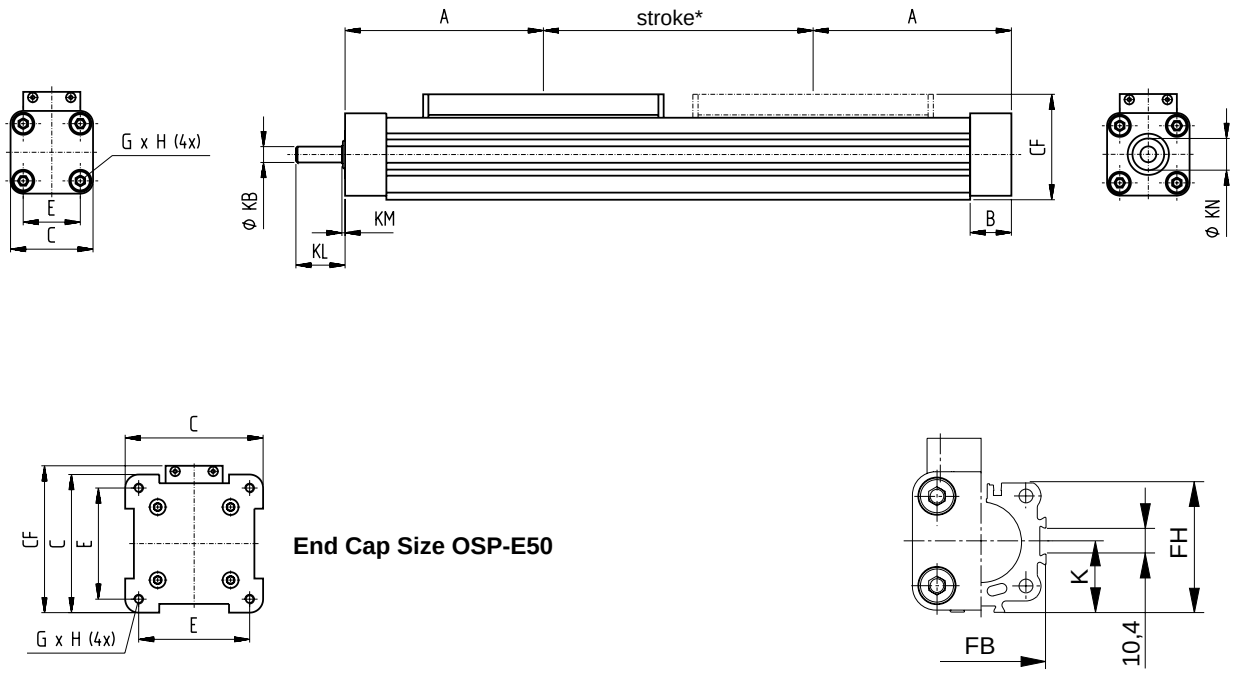

*** The end of stroke must not be used as a mechanical stop. Add to both ends, a minimum extra length of 25 mm to the stroke.**
The use of AC motor with frequency converter drives normally requires a larger 'extra length' than that required for servo systems.
For advise, please contact your local HOERBIGER-ORIGA technical support department.

Standard Carrier Mounting
Series OSP-E25ST, -E32ST, -E50ST

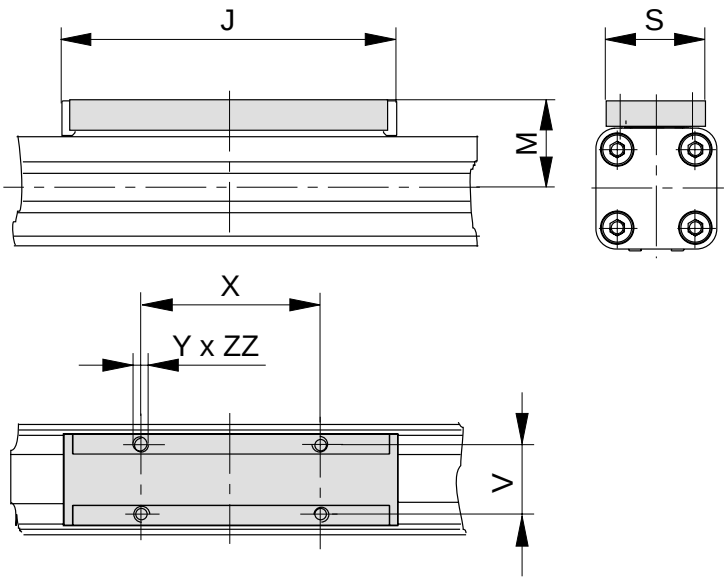

Dimension Table (mm)

Series	A	B	C	E	G	H	J	K	M	S	V	X	Y	CF	FB	FH	KB	KL	KM	KN	ZZ
OSP-E25ST	100	22	41	27	M5	10	117	21.5	31	33	25	65	M5	52.5	40	39.5	6_{h7}	17	2	13	8
OSP-E32ST	125	25.5	52	36	M6	12	152	28.5	38	36	27	90	M6	66.5	52	51.7	10_{h7}	31	2	20	10
OSP-E50ST	175	33	87	70	M6	12	200	43	49	36	27	110	M6	92.5	76	77	15_{h7}	43	3	28	10

Order Instruction – Basic Electric Linear Actuator OSP-E..ST

Electric Linear Actuator

	OSP-E	25	-	2	04	0	0 –	00500

Size

25 = Size 25
32 = Size 32
50 = Size 50

Actuator

2 = Trapezoidal Screw Driven (ST)

Pitch

04 = 4 mm for size 25
04 = 4 mm for size 32
06 = 6 mm for size 50

Stroke

Input (five digits) in mm

Open Option

0 = Not defined

Gearbox

0 = Without gearbox

Accessories - please order separately

Description	Further information see Data Sheet No.
Clevis Mounting	**1.45.021E**
End Cap Mountings	**1.45.022E**
Mid-Section Support	**1.45.023E**
Inversion Mounting	**1.45.025E**
Adapter Profile	**1.45.026E**
T-Nut Profile	**1.45.027E**
Coupling Housing (for motor)	**1.45.029E**
Proximity Sensors	**1.45.101E**
3-Phase Stepper Motor and Controller	**see Catalogue A4P019E**
AC-Servo Motor and Controller	**see Catalogue A4P019E**

Linear Actuator with Trapezoidal Screw and Extending Rod Series OSP-E..SR

Contents

Description	Data Sheet No.	Page
Overview	1.35.010	67-70
Technical Data	1.35.011-1 to 2	71-72
Dimensions	1.35.011-3	73
Order Instructions	1.35.011-4	74

ELECTRIC LINEAR ACTUATOR FOR INTERMITTENT APPLICATIONS

A completely new generation of linear drives which can be integrated into any machine layout neatly and simply.

Linear Actuator with Trapezoidal Screw and Extending Rod

Advantages:

- Accurate path and position control
- High force output
- Self-locking
- Excellent slow speed characteristics
- Easy installation
- Low maintenance
- Ideal for level regulation, lifting and other applications with intermittent operations

Features:

- Piston rod-end dimensions conforming to ISO pneumatic standards
- Complete motor and control packages
- Diverse range of accessories and mountings
- Special options available

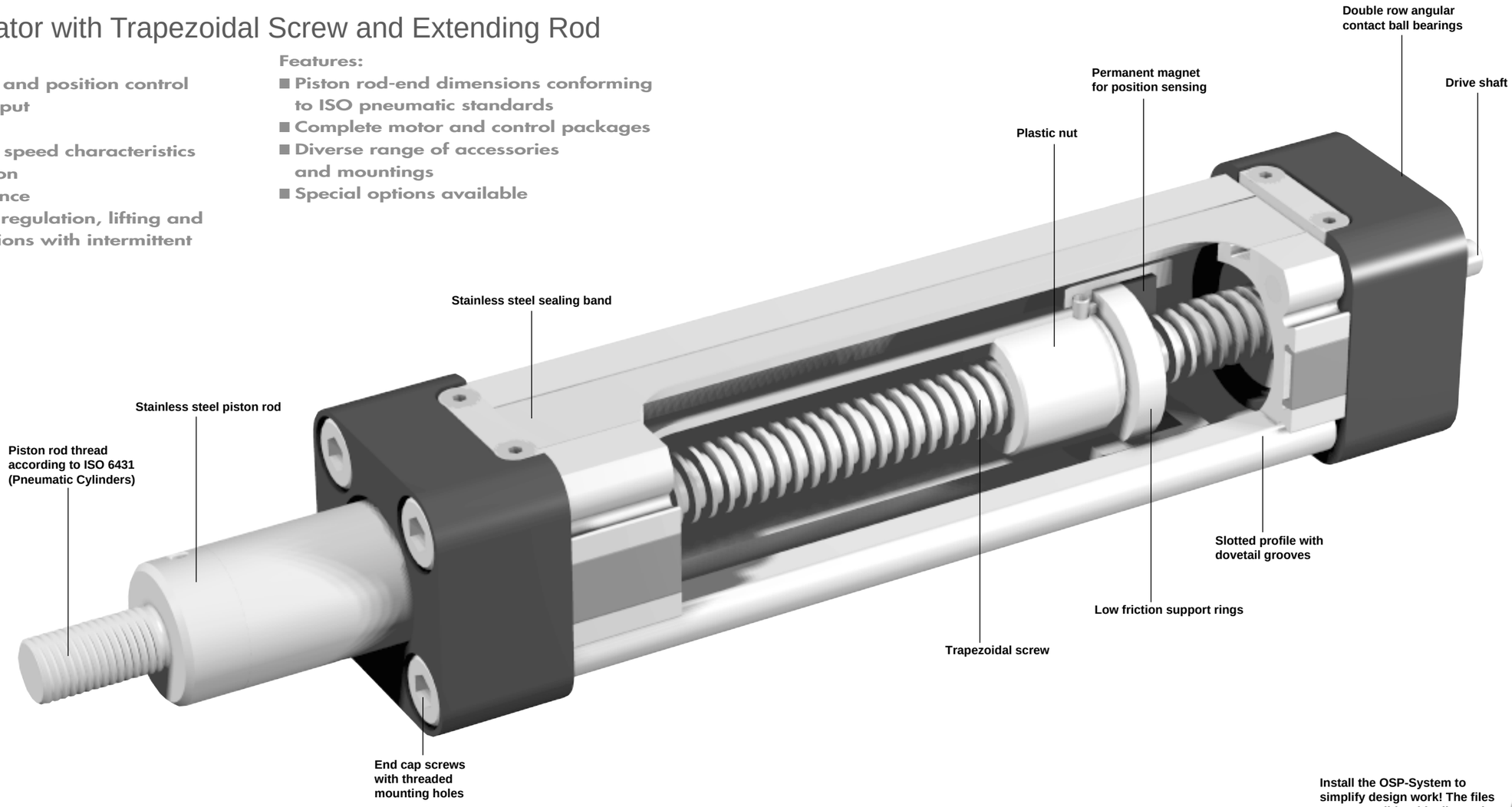

Install the OSP-System to simplify design work! The files are compatible with all popular CAD systems and package hardware.

OPTIONS AND ACCESSORIES

SERIES OSP-E, TRAPEZOIDAL SCREW DRIVEN AND EXTENDING ROD

STANDARD VERSIONS OSP-E..SR

Data Sheet 1.35.011E-1,-2,-3,-4

Standard carrier with integral guidance. Dovetail profile for mounting of accessories and the actuator itself.

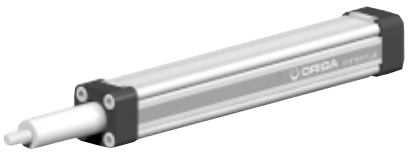

MOUNTINGS FOR OSP-E25SR BIS E50SR

END CAP MOUNTING
Data Sheet 1.45.022E

For end-mounting the actuator on the extending rod side

Data Sheet 1.45.023E

For mounting the actuator on the dovetail grooves and on the motor end

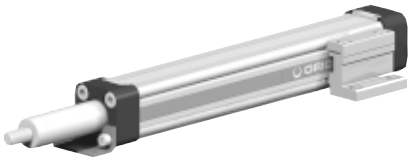

FLANGE MOUNTING C

Data Sheet 1.45.022E
For end-mounting the actuator on the extending rod side

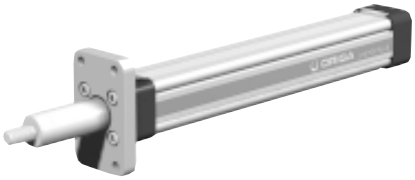

TRUNNION MOUNTING EN

Data Sheet 1.45.022E

For pivoted support

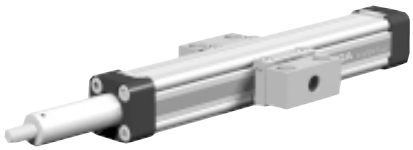

PISTON ROD CLEVIS
Data Sheet 1.45.030E

PISTON ROD EYE
Data Sheet 1.45.030E

PISTON ROD COMPENSATING COUPLING
Data Sheet 1.45.030E

For compensating of radial and angular misaligments

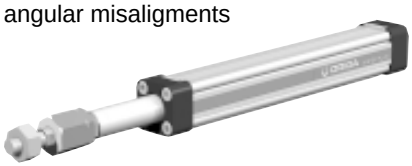

ACCESSORIES

PROXIMITY SENSOR SERIES RS AND ES

Data Sheet 1.45.101E
For electrical sensing of end and intermediate carrier positions.

MOTOR MOUNTINGS

Data Sheet 1.45.029E

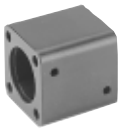

A3P154E00IZ50X

The right to introduce technical modifications is reserved

Linear Actuator with Trapezoidal Screw and Extending Rod

Series OSP-E..SR
Size 25, 32, 50

OSP
ORIGA SYSTEM PLUS

Characteristics

Characteristics		Symbol	Unit	Description
General Features				
Type				Linear Actuator with Trapezoidal Screw with extended Rod
Series				OSP-E..SR
Mounting				See drawings
Operating temperature range		ϑ_{min} ϑ_{max}	°C °C	-20 +70
Weight (mass)			kg	See table
Installation				In any position
Material	Slotted profile			Extruded anodized aluminium
	Trapezoidal screw			Cold rolled steel
	Drive nut			Thrermoplastic polyester
	Piston rod			Stainless steel
	Sealing band			Hardened stainless steel
	Guide bearings			Low friction plastic
	Screws, nuts			Zinc plated steel
	Mountings			Zinc plated steel and aluminium
Encapsulation class			IP	54

Weight (mass) kg and Inertia

Series	Weight (mass)[kg]		Moving mass [kg]		Inertia [x 10^{-6} kgm^2]	
	At stroke 0 m	Add per metre stroke	At stroke 0 m	Add per metre stroke	At stroke 0 m	Add per metre
OSP-E25SR	0.4	2.9	0.1	0.7	1.1	10.3
OSP-E32SR	0.9	5.4	0.2	1.2	3.9	29.6
OSP-E50SR	2.4	10.6	0.8	1.6	24.6	150

Standard Version:

- Dovetail grooves for mounting accessories and the drive itself
- Travel per rotation of threaded spindle:
  Type OSP-E25SR : 3 mm
  Type OSP-E32SR: 4 mm
  Type OSP-E50SR: 5 mm

Installation Instructions

Use the threaded holes in the free end cap and a mid-section support close to the motor end for mounting the linear actuator.
The linear actuator can be fitted in any position. To prevent contamination such as fluid ingress, the actuator should be fitted with its sealing band facing downwards.

Maintenance

All moving parts are long-term lubricated for a normal operational environment. We recommend a check and lubrication of the linear actuator, and if necessary a change of worn parts, after every 24th month or 300 km travel of distance, depending on the type of application.
Please see separate instructions.

Start Up

The products in this datasheet should not be operated until the machine/ application in which they are used has passed necessary inspection.

HOERBIGER ORIGA

For **proximity sensors** see 1.45.101E
For **mountings** and **accessories** see 1.45.020E to 030E

A1P640E00IZ00X

The right to introduce technical modifications is reserved

Sizing Performance Overview Maximum Loadings

Sizing of Linear Actuator

The following steps are recommended for selection :

1. Check that the maximum values in the adjacent chart and transverse force/stroke graph below are not exceeded.
2. Check the lifetime/travel distance in graph below.
3. When sizing and specyfying the motor, the RMS-average torque must be calculated using the cycle time in application

Performance Overview

Characteristics	Unit	Description		
Series		**OSP-E25SR**	**OSP-E32SR**	**OSP-E50SR**
Pitch	[mm]	3	4	5
Max. speed	[m/s]	0.075	0.1	0.125
Linear motion per revolution, drive shaft	[mm]	3	4	5
Max. rpm, drive shaft	[min^{-1}]	1500	1500	1500
Max. effective action force F_A Corresponding torque on drive shaft	[N] [Nm]	800 1.35	1600 3.4	3300 9.25
No-load torque	[N]	0,3	0.4	0.5
Max. allowable torque on drive shaft	[Nm]	1.7	4.4	12
Self-locking force F_L [1)]	[N]	800	1600	3300
Typical repeatability	[mm/m]	±0,5	±0.5	±0.5
Max. Standard stroke length	[m]	0.5	0.5	0.5

[1)] Related to screw types Tr 12x3, Tr 16x4, TR 24x5
see data sheet 1.35.011E-1 – for inertia

Transverse Force/ stroke

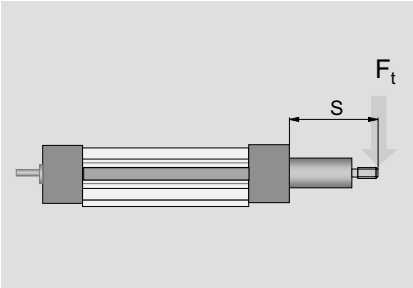

Transverse Force/Stroke

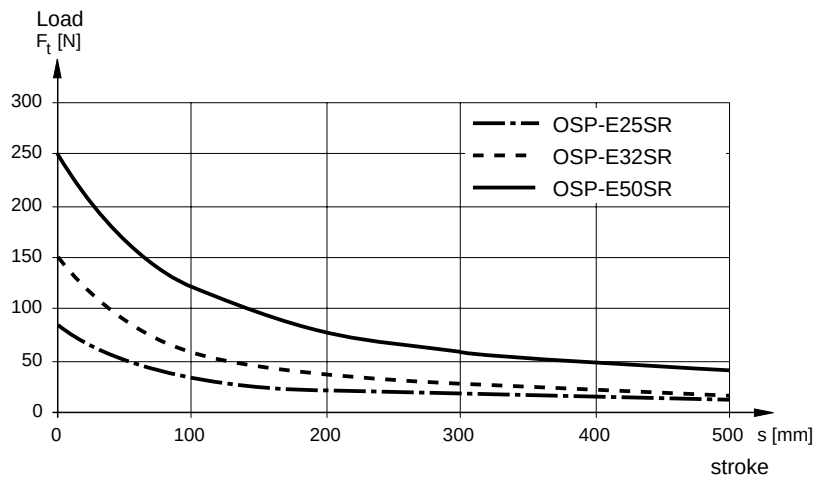

The graph is based upon 10% intermittent usage

Action Force vs. intermittent travel distance

The actuators are designed for a 10% intermittent usage.
A more frequent usage will decrease lifetime depending on load and internal temperature conditions.

Action force vs. intermittent travel distance

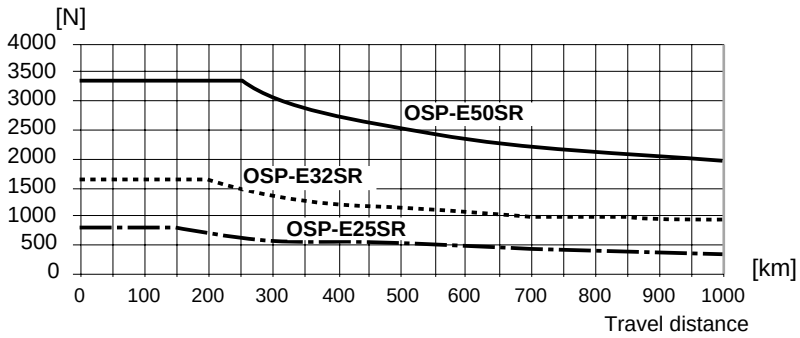

The graph is based upon 10% intermittent usage

Linear Actuator with Trapezoidal Screw and Extending Rod – Basic Unit
Series OSP-E25SR, OSP-E32SR, OSP-E50SR

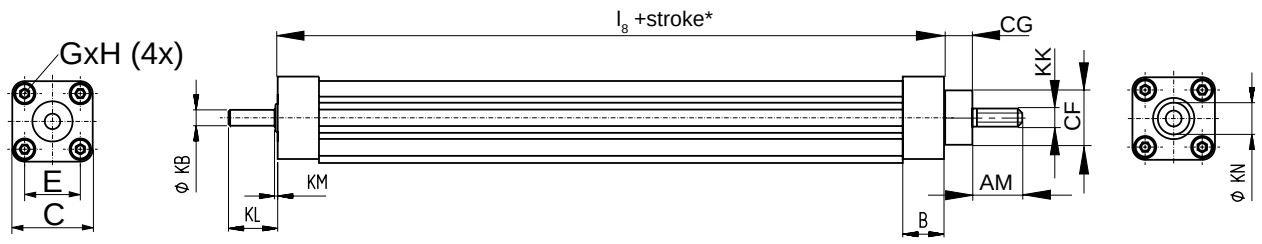

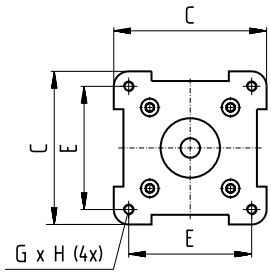

End Cap Size OSP-ESR50

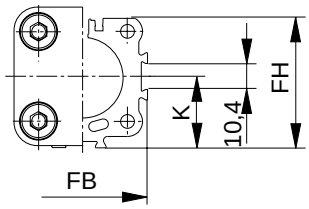

*** The end of stroke must not be used as a mechanical stop. Add to both ends, a minimum extra length, of 25 mm to the stroke.**
The use of AC motor with frequency converter drives normally requires a larger 'extra length' than that required for servo systems.

For advise, please contact your local HOERBIGER-ORIGA technical support department.

Stroke Length:

The stroke lengths of the linear actuators are as standard available in multiples of 1 mm up to 500 mm. Other stroke lengths on request.

Dimension Table (mm)

Series	B	C	E	G	H	K	l_8	AM	CF	CG	FB	FH	KB	KK	KL	KM	KN
OSP-E25SR	22	41	27	M5	10	21.5	83	20	22	26	40	39.5	6_{h7}	M10x1,25	17	2	13
OSP-E32SR	25.5	52	36	M6	12	28.5	94	20	28	26	52	51.7	10_{h7}	M10x1,25	31	2	20
OSP-E50SR	33	87	70	M6	12	43	120	32	38	37	76	77	15_{h7}	M16x1,5	43	3	28

Order Instruction – Basic Electric Linear Actuator OSP-E..SR

Electric Linear Actuator

	OSP-E	25	–	3	03	0	0 –	00500

Size
25 = Size 25
32 = Size 32
50 = Size 50

Actuator
3 = Trapezoidal Screw Driven(SR)

Pitch
03 = 3 mm for size 25
04 = 4 mm for size 32
05 = 5 mm for size 50

Stroke
Input (five digits) in mm

Gearbox
0 = Without gearbox

Drive Shaft Options
0 = Standard

Accessories - please order separately

Description	Further information see Data Sheet No.
End Cap Mountings	**1.45.022E**
Mid-Section Support	**1.45.023E**
Adaptor Profile	**1.45.026E**
T-Nut Profile	**1.45.027E**
Coupling Housing (for motor)	**1.45.029E**
Flange Mounting C	**1.45.022E**
Trunnion Mounting EN	**1.45.022E**
Piston Rod Clevis according to ISO 8140	**1.45.030E**
Piston Rod Eye according to ISO 8139	**1.45.030E**
Piston Rod Compensating Coupling	**1.45.030E**
Proximity Sensors	**1.45.101E**
3-Phase Stepper Motor and Controller	**see Catalogue A4P019E**
AC-Servo Motor and Controller	**see Catalogue A4P019E**

Multi-Axis Connection System for Linear Drive Systems Series OSP-E

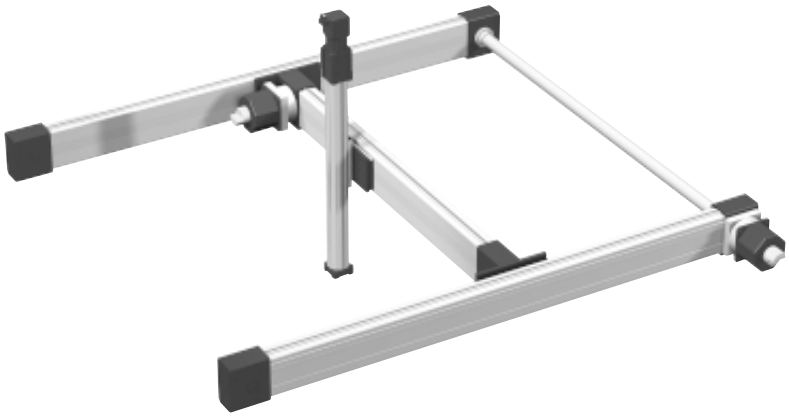

Contents

Description	Data Sheet No.	Page
Overview	1.38.001	75-78
Adapter plates – Dimensions/Order Instructions	1.38.002-1 to 9	79-87
Profile Mountings – Dimensions/Order Instructions	1.38.003	89
Intermediate Drive Shafts – Dimensions/Order Instructions	1.38.004	90

MULTI-AXIS CONNECTION SYSTEM – SIMPLIFIES ENGINEERING AND INSTALLATION

A completely new system for easy connection of OSP-E linear drives in multi-axis systems.

MULTI-AXIS CONNECTIONS

With a highly adaptable system for connection of linear drives in multi-axis arrangements, HOERBIGER-ORIGA offers design engineers complete flexibility.

A wide range of adapter plates, profile mountings and intermediate drive shafts simplify engineering and installation.
The connection system enables actuators to be mounted in carrier to carrier; carrier to profile; carrier to end cap mounting; and carrier to end cap configurations.

Developed for the heavy-duty belt drive series OSP-E..BHD, the system provides cross-connection with the same series and also other linear drive series in the ORIGA SYSTEM PLUS range.

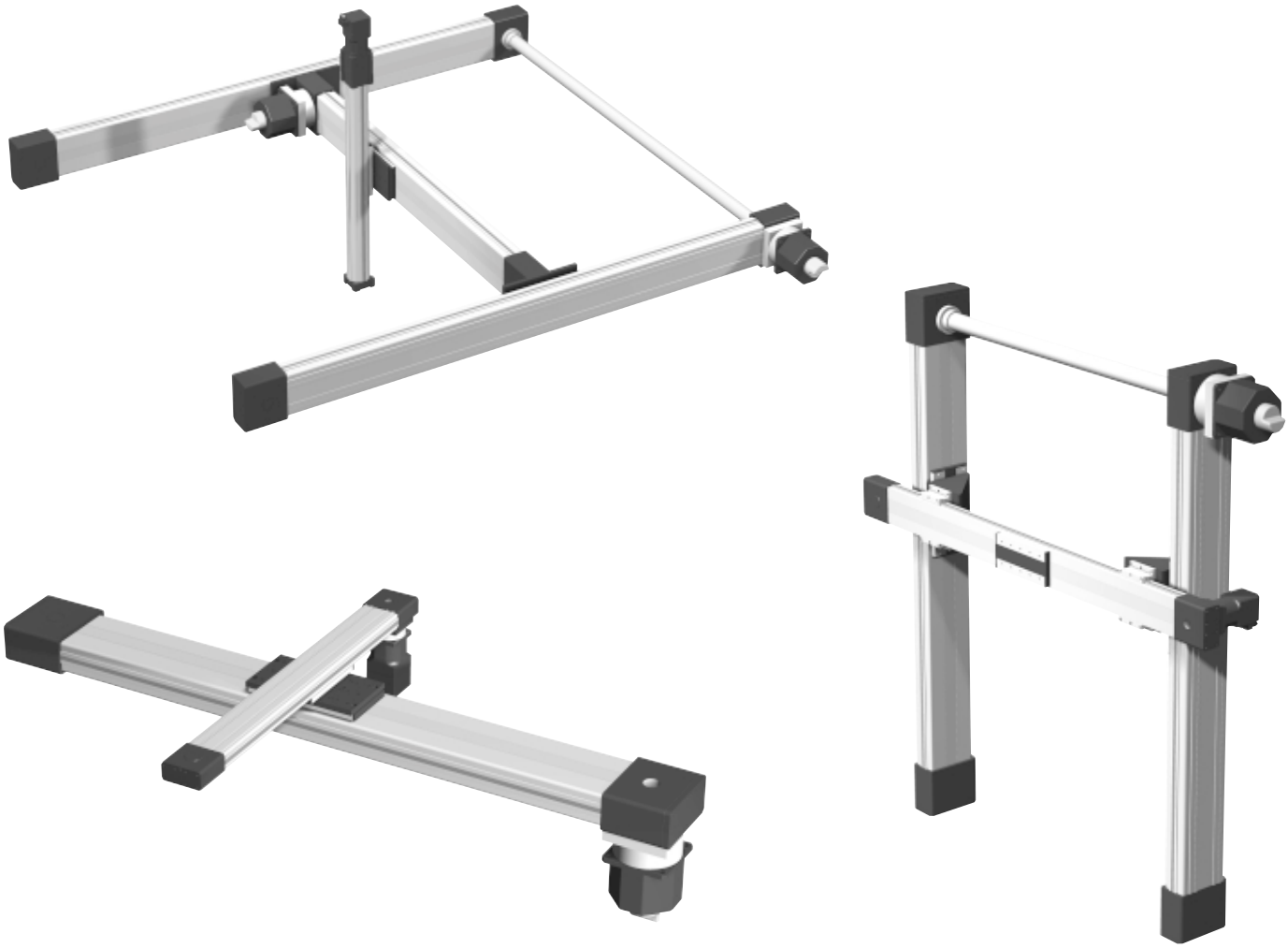

MULTI-AXIS CONNECTION SYSTEM

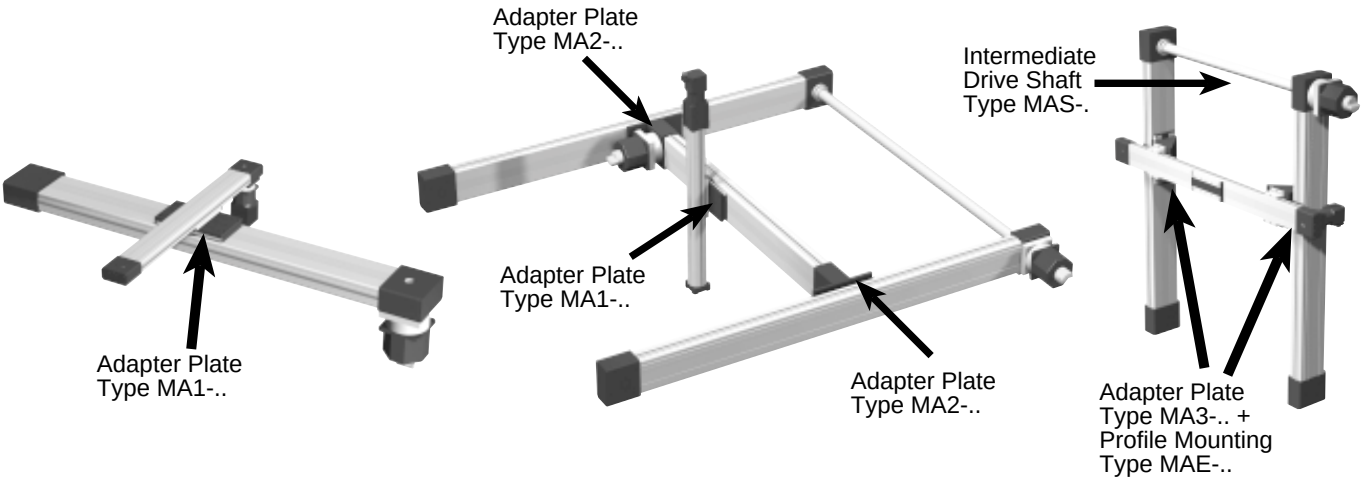

*** For available standard combinations, see data sheet 1.38.001E-4**

Adapter Plate Type MA1-..* For connecting carrier to carrier, carrier to profile mounting or carrier to end cap mounting. 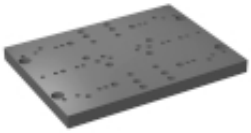	Combination C* 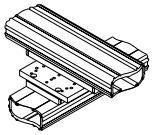	Combination P* 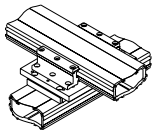	Combination EM* 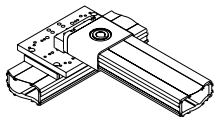
	Combination C* 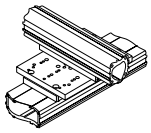	Combination P* 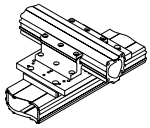	Combination EM* 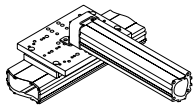
Adapter Plate Type MA2-..* For connecting carrier to end cap. 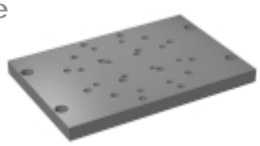	Combination E* 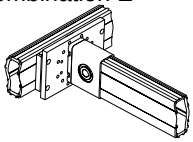	Combination E* 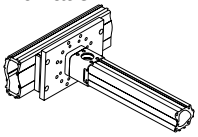	
Adapter Plate Type MA3-..* For connecting 90° carrier to profile mounting or carrier to end cap mounting. 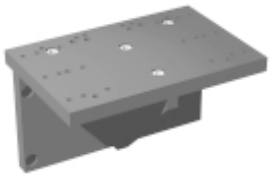	Combination P* 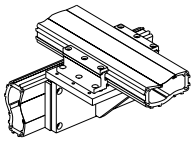	Combination P* 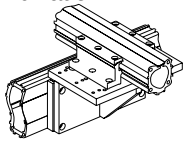	
	Combination EM* 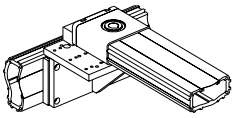	Combination EM* 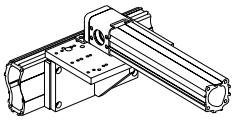	
Profile Mounting Type MAE-.. 	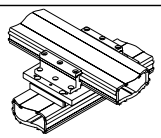	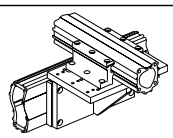	
Intermediate Drive Shaft Type MAS-. 			

AVAILABLE MOUNTING COMBINATIONS

Available Mounting Combinations

Combination C*

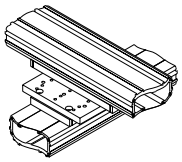

Combination P

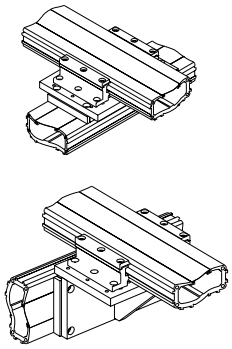

Combination E*

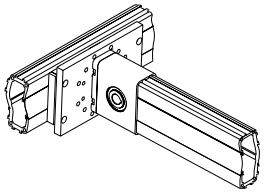

Combination EM*

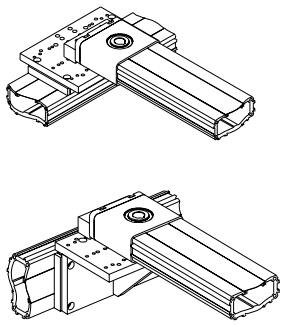

Illustrations just show OSP-E..BHD examples

		OSP-E..BHD/BHD-BP												OSP-E..B/S/ST/SR*/BP											
		-25				-32				-50				-25				-32				-50			
Series	**Typ**	C[1]	P[2]	E[3]	EM[4]	C[5]	P[6]	E[7]	EM[8]	C[9]	P[10]	E[11]	EM[12]	C[13]	P[14]	E[15]	EM[16]	C[17]	P[18]	E[19]	EM[20]	C[21]	P[22]	E[23]	EM[24]
OSP-E25BHD	**MA1-25**	X	X		X	X	X		X					X	X		X	X	X		X	X	X		X
OSP-E32BHD	**MA1-32**	X	X		X	X	X		X	X	X		X					X	X		X	X	X		X
OSP-E50BHD	**MA1-50**	X	X		X	X	X		X	X	X		X					X				X	X		X
OSP-E25BHD	**MA2-25**			X				X								X				X				X	
OSP-E32BHD	**MA2-32**			X				X				X								X				X	
OSP-E50BHD	**MA2-50**			X				X				X												X	
OSP-EBHD25	**MA3-25**		X		X		X		X						X		X		X		X		X		X
OSP-EBHD32	**MA3-32**		X		X		X		X		X		X						X		X		X		X
OSP-EBHD50	**MA3-50**		X		X		X		X		X		X										X		X

Abbreviations:
C = MAn to Carrier,
P = MAn to Profile mounting,
E = MAn to End cap,
EM = MAn to End cap mounting (n=1,2,3)
*For type OSP-ESR is only combination **P** available.

Values in superscript refer to corresponding adapter plate dimensions on data sheets 1.38.002E-1 to 1.38.002E-9.
e.g. Dimensions corresponding to combination option „C“ for adapter plate MA1-50 connected to an OSP-E32BHD carrier are shown with Superscript number [5] on the MA1-50 adapter plate data sheet 1.38.002E-3

Other combinations on request.

A3P154D00IZ50X

The right to introduce technical modifications is reserved

Linear Drives see 1.15.002E, 1.20.002E, 1.25.002E, 1.30.002E, 1.35.002E, 1.35.011E

Adapter Plate
for OSP-E25

OSP
ORIGA SYSTEM PLUS

Type: MA1-25

Dimensions (mm) Adapter Plate Type MA1-25

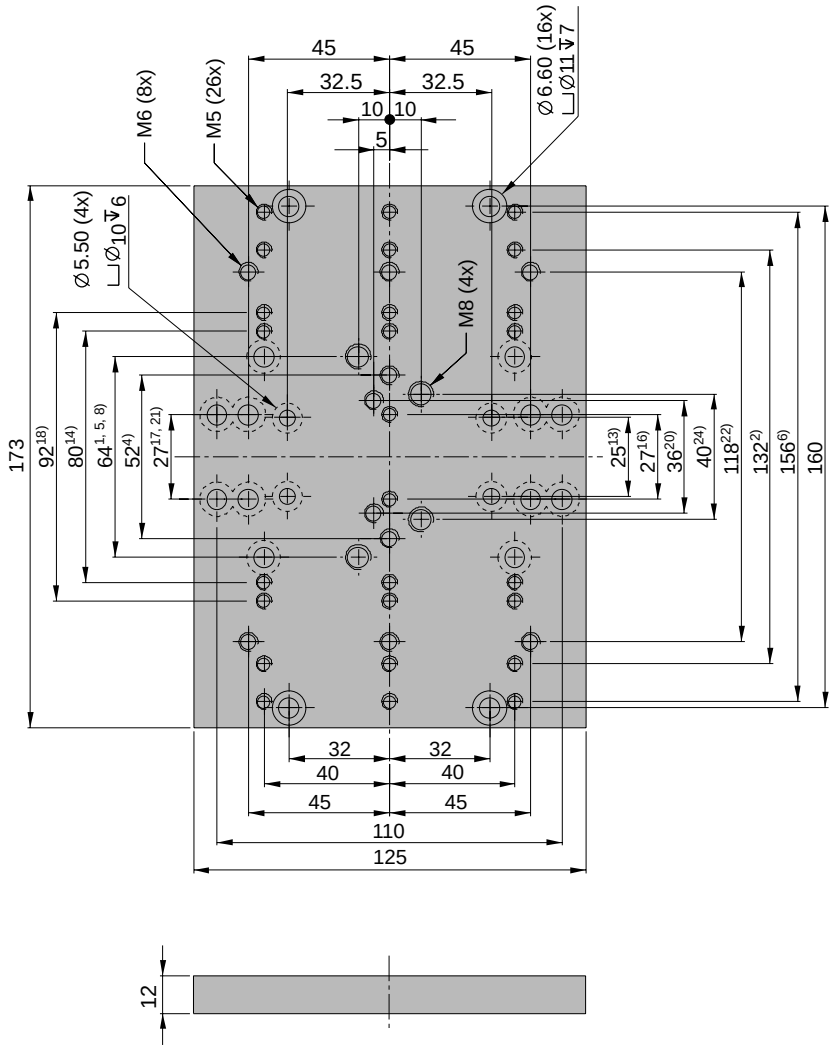

Dimensions with Superscript values, refer to the corresponding available options detailed on data sheet 1.38.001E-4.
e.g. Dimensions with Superscript number [5], corresponds to the option ”C” for OSP-E32BHD actuator.

A1P559E00DZ00X

Order Instructions and Weight

Description	Weight(mass) [kg]	**Order No.**
Adapter Plate Type MA1-25	0,7	**12269**

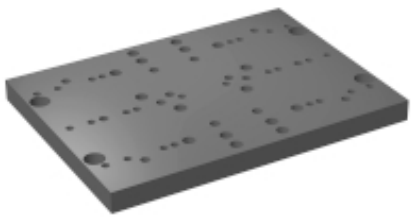

Linear Drives see 1.15.002E, 1.20.002E, 1.25.002E, 1.30.002E, 1.35.002E, 1.35.011E

The right to introduce technical modifications is reserved

HOERBIGER ORIGA

Adapter Plate
for OSP-E32

OSP
ORIGA
SYSTEM
PLUS

Type: MA1-32

Dimensions (mm) Adapter Plate Type MA1-32

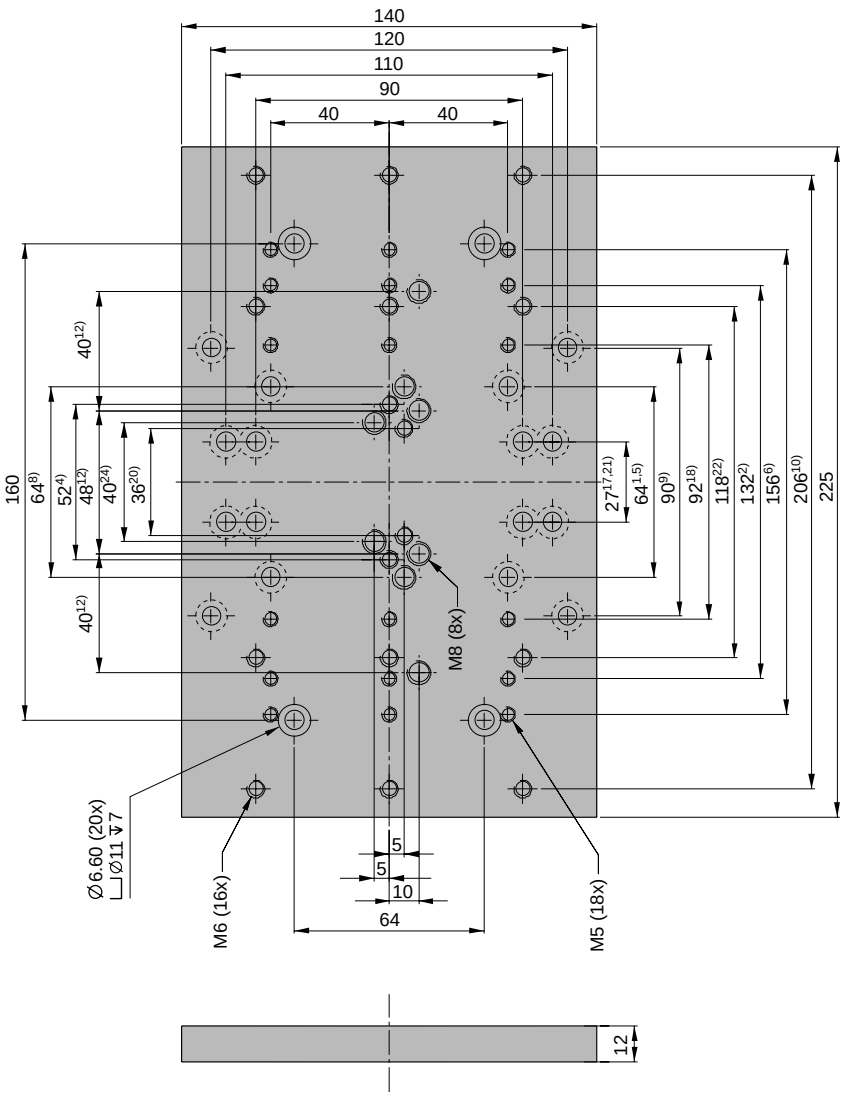

Dimensions with Superscript values, refer to the corresponding available options detailed on data sheet 1.38.001E-4.
e.g. Dimensions with Superscript number [5], corresponds to the option "C" for OSP-E32BHD actuator.

Order Instructions and Weight

Description	Weight(mass) [kg]	**Order No.**
Adapter Plate Type MA1-32	1,0	**12272**

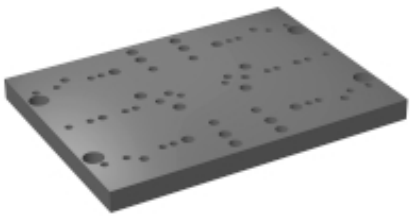

HOERBIGER
ORIGA

Linear Drives see 1.15.002E, 1.20.002E, 1.25.002E, 1.30.002E, 1.35.002E, 1.35.011E

Adapter Plate
for OSP-E50

OSP
ORIGA SYSTEM PLUS

Type: MA1-50

Dimensions (mm) Adapter Plate Type MA1-50

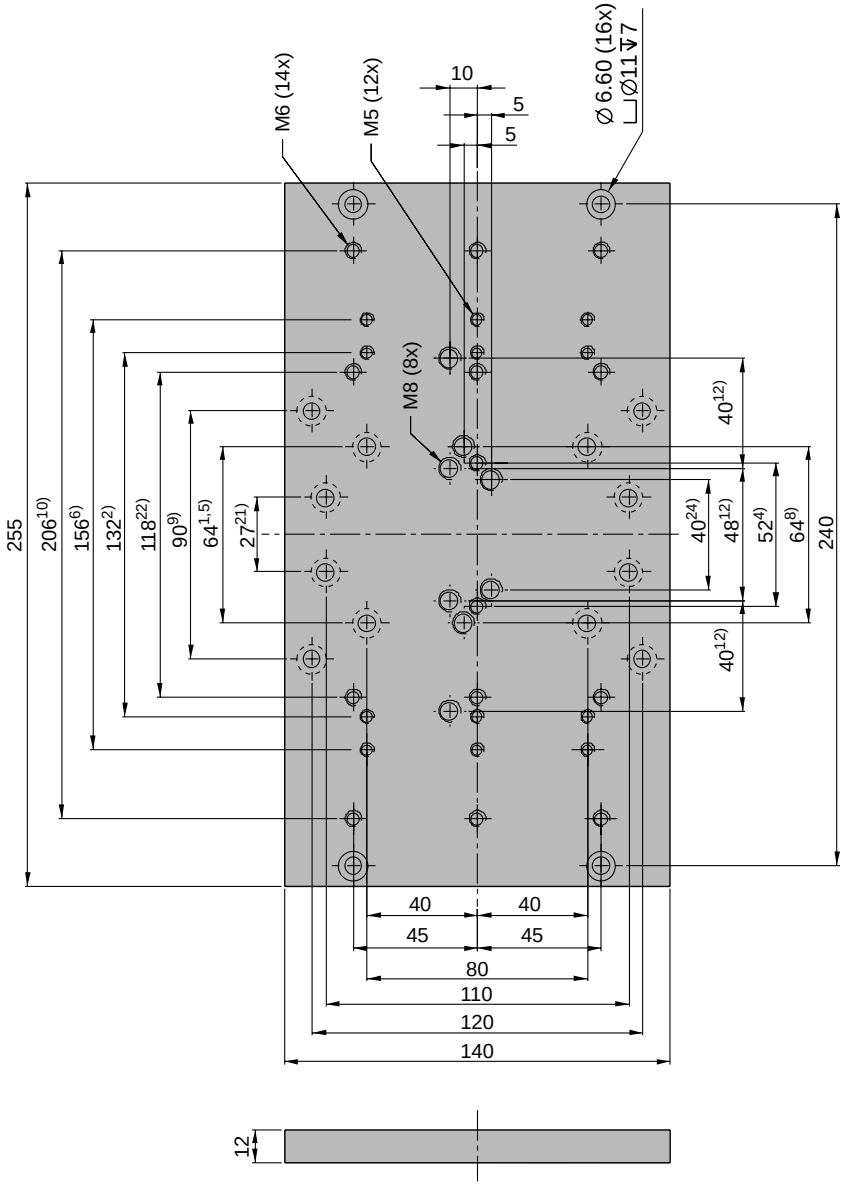

Dimensions with Superscript values, refer to the corresponding available options detailed on data sheet 1.38.001E-4.
e.g. Dimensions with Superscript number [5], corresponds to the option ”C” for OSP-E32BHD actuator.

Order Instructions and Weight

Description	Weight(mass) [kg]	**Order No.**
Adapter Plate Type MA1-50	1,1	**12275**

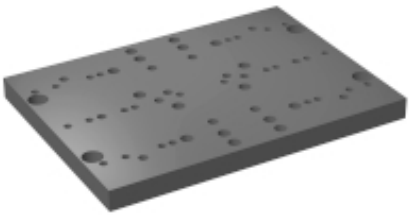

Linear Drives see 1.15.002E, 1.20.002E, 1.25.002E, 1.30.002E, 1.35.002E, 1.35.011E

HOERBIGER ORIGA

Adapter Plate
for OSP-E25

OSP
ORIGA SYSTEM PLUS

Type: MA2-25

Dimensions (mm) Adapter Plate Type MA2-25

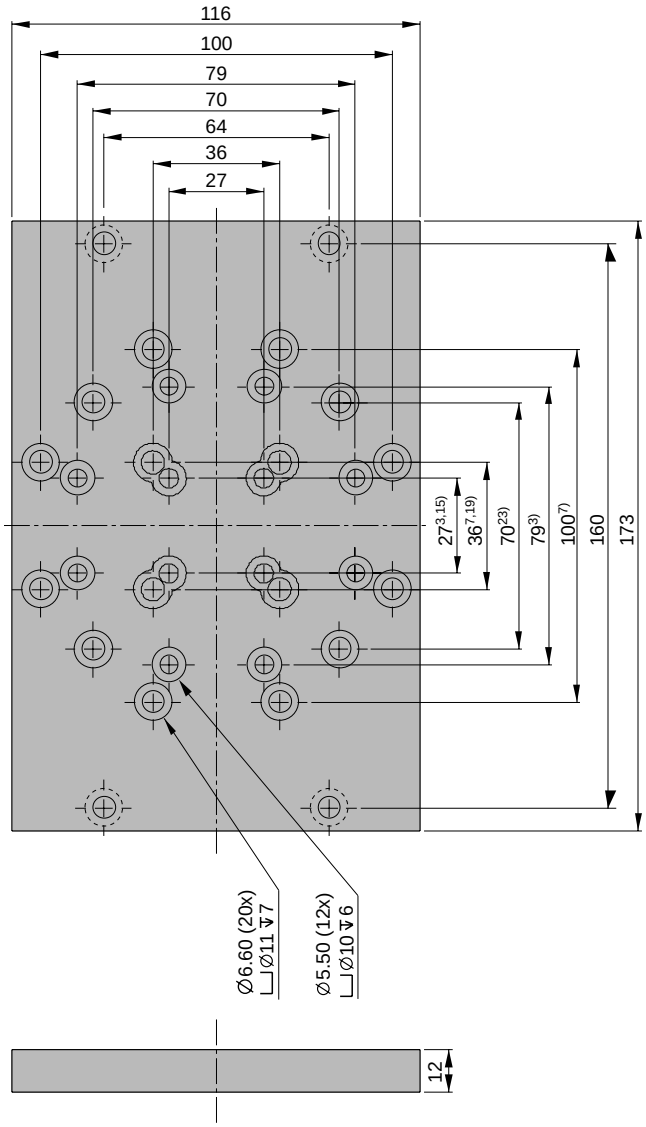

Dimensions with Superscript values, refer to the corresponding available options detailed on data sheet 1.38.001E-4.
e.g. Dimensions with Superscript number [3], corresponds to the option "E" for OSP-E25BHD actuator.

Order Instructions and Weight

Description	Weight(mass) [kg]	**Order No.**
Adapter Plate Type MA2-25	0,6	**12270**

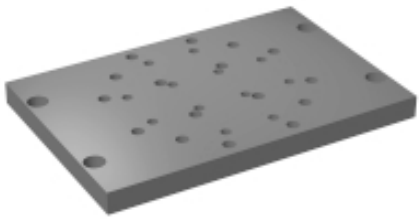

HOERBIGER ORIGA

Linear Drives see 1.15.002E, 1.20.002E, 1.25.002E, 1.30.002E, 1.35.002E, 1.35.011E

Adapter Plate
for OSP-E32

OSP
ORIGA SYSTEM PLUS

Type: MA2-32

Dimensions (mm) Adapter Plate Type MA2-32

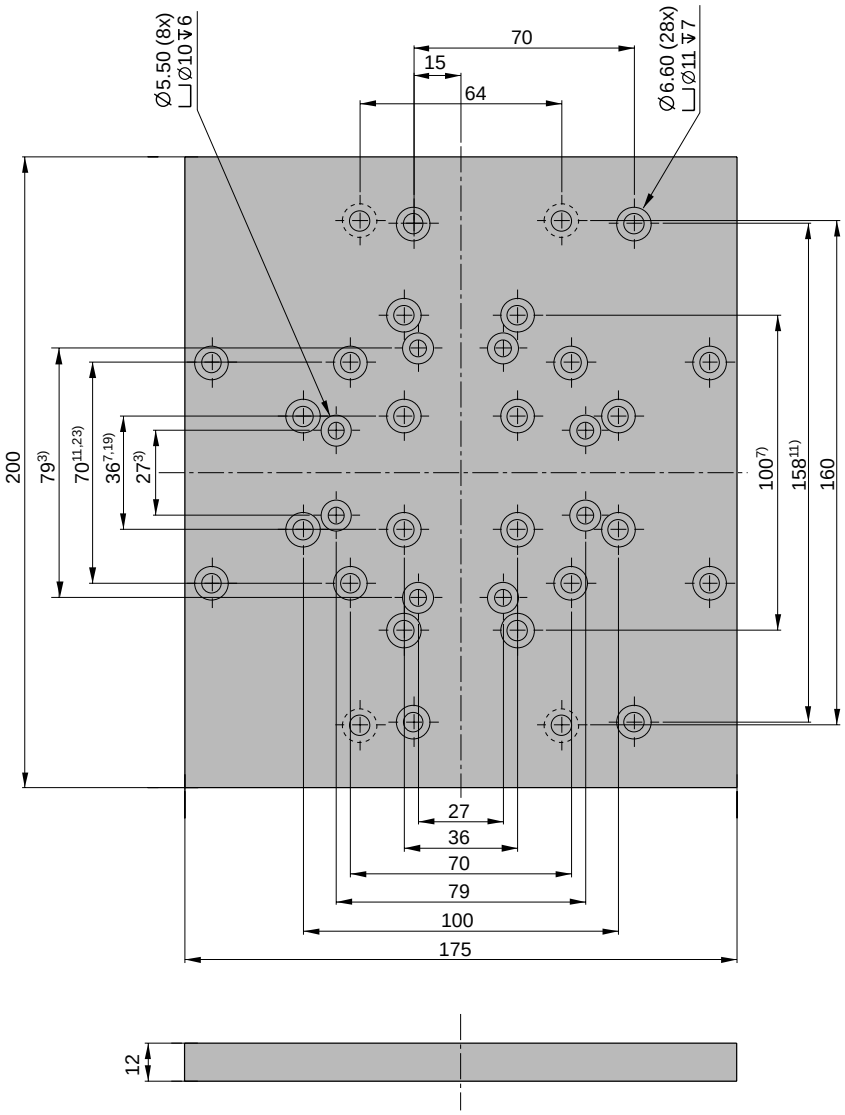

Dimensions with Superscript values, refer to the corresponding available options detailed on data sheet 1.38.001E-4.
e.g. Dimensions with Superscript number [3], corresponds to the option ”E” for OSP-E25BHD actuator.

Order Instructions and Weight

Description	Weight(mass) [kg]	**Order No.**
Adapter Plate Type MA2-32	1,1	**12273**

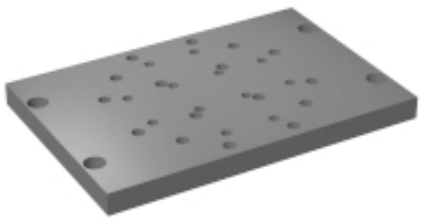

Linear Drives see 1.15.002E, 1.20.002E, 1.25.002E, 1.30.002E, 1.35.002E, 1.35.011E

HOERBIGER ORIGA

Adapter Plate
for OSP-E50

OSP
ORIGA SYSTEM PLUS

Type: MA2-50

Dimensions (mm) Adapter Plate Type MA2-50

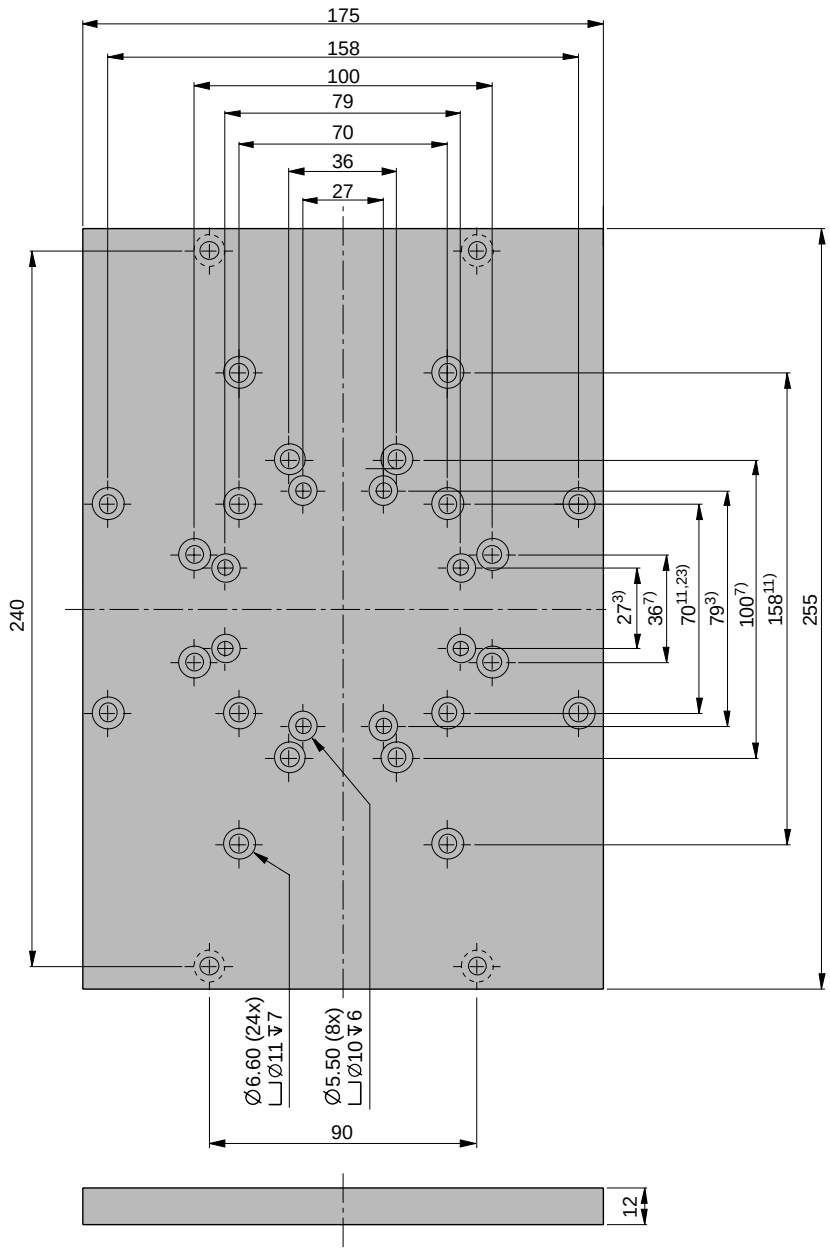

Dimensions with Superscript values, refer to the corresponding available options detailed on data sheet 1.38.001E-4.
e.g. Dimensions with Superscript number [3], corresponds to the option "E" for OSP-E25BHD actuator.

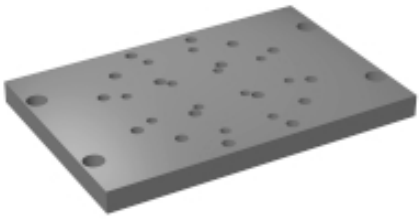

Order Instructions and Weight

Description	Weight(mass) [kg]	**Order No.**
Adapter Plate Type MA2-50	1,4	**12276**

Linear Drives see 1.15.002E, 1.20.002E, 1.25.002E, 1.30.002E, 1.35.002E, 1.35.011E

HOERBIGER ORIGA

Adapter Plate
for OSP-E25

OSP
ORIGA SYSTEM PLUS

Type: MA3-25

Dimensions (mm) Adapter Plate Type MA3-25

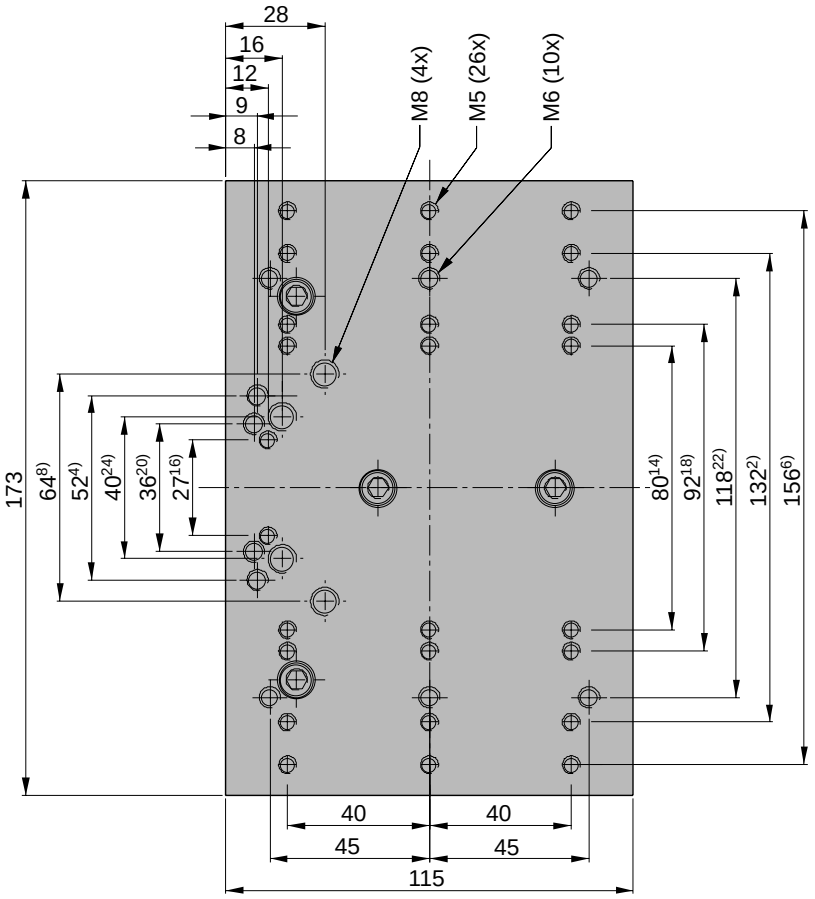

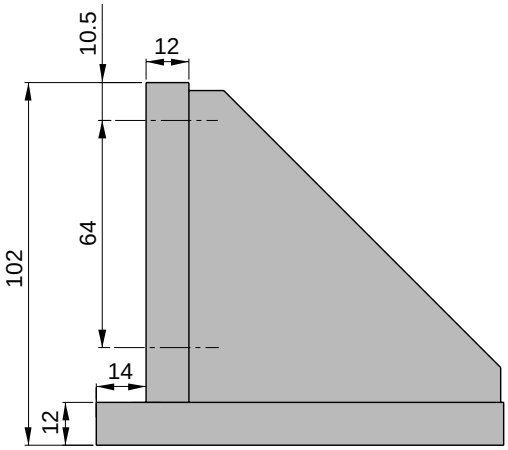

Dimensions with Superscript values, refer to the corresponding available options detailed on data sheet 1.38.001E-4.
e.g. Dimensions with Superscript number [4], corresponds to the option "EM" for OSP-E25BHD actuator.

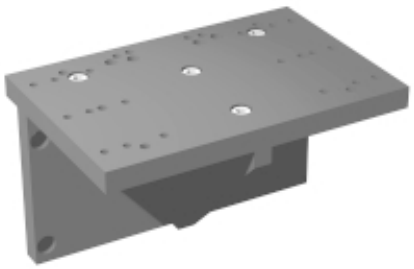

Order Instructions and Weight

Description	Weight(mass) [kg]	**Order No.**
Adapter Plate Type MA3-25	1,3	**12271**

Linear Drives see	1.15.002E, 1.20.002E, 1.25.002E, 1.30.002E, 1.35.002E, 1.35.011E

HOERBIGER ORIGA

Adapter Plate
for OSP-E32

OSP
ORIGA
SYSTEM
PLUS

Type: MA3-32

Dimensions (mm) Adapter Plate Type MA3-32

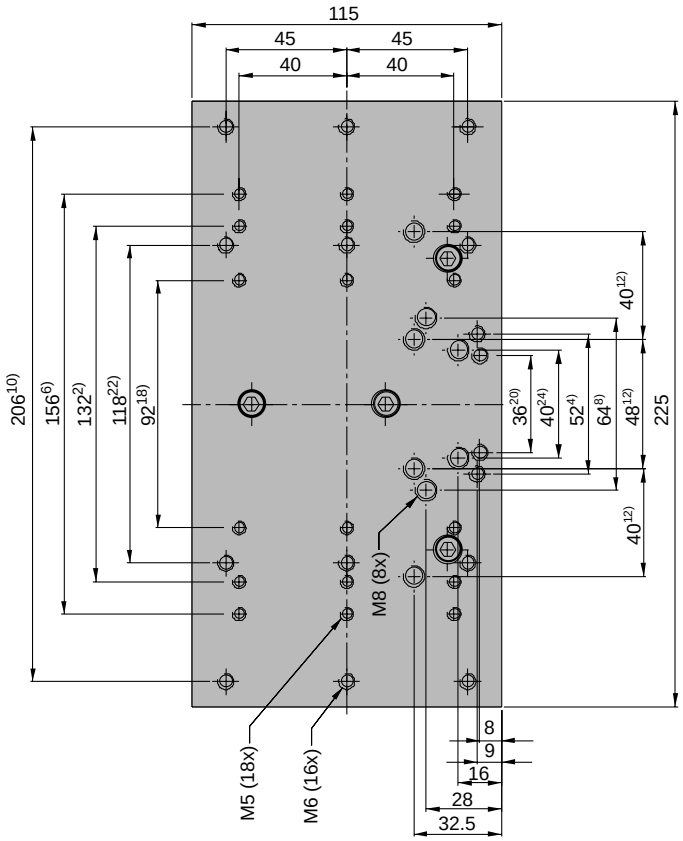

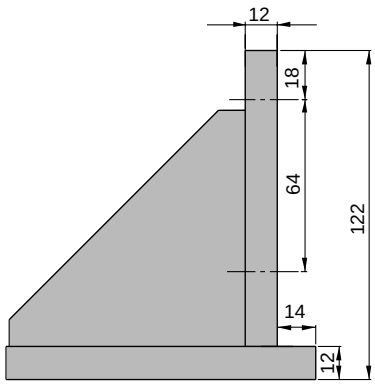

Dimensions with Superscript values, refer to the corresponding available options detailed on data sheet 1.38.001E-4.
e.g. Dimensions with Superscript number [4], corresponds to the option ”EM” for OSP-E25BHD actuator.

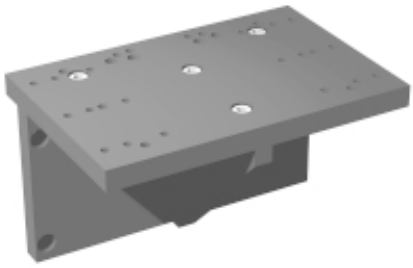

Order Instructions and Weight

Description	Weight(mass) [kg]	**Order No.**
Adapter Plate Type MA3-32	1,8	**12274**

Linear Drives see	1.15.002E, 1.20.002E, 1.25.002E, 1.30.002E, 1.35.002E, 1.35.011E

HOERBIGER
ORIGA

Adapter Plate
for OSP-E50

OSP
ORIGA SYSTEM PLUS

Type: MA3-50

Dimensions (mm) Adapter Plate Type MA3-50

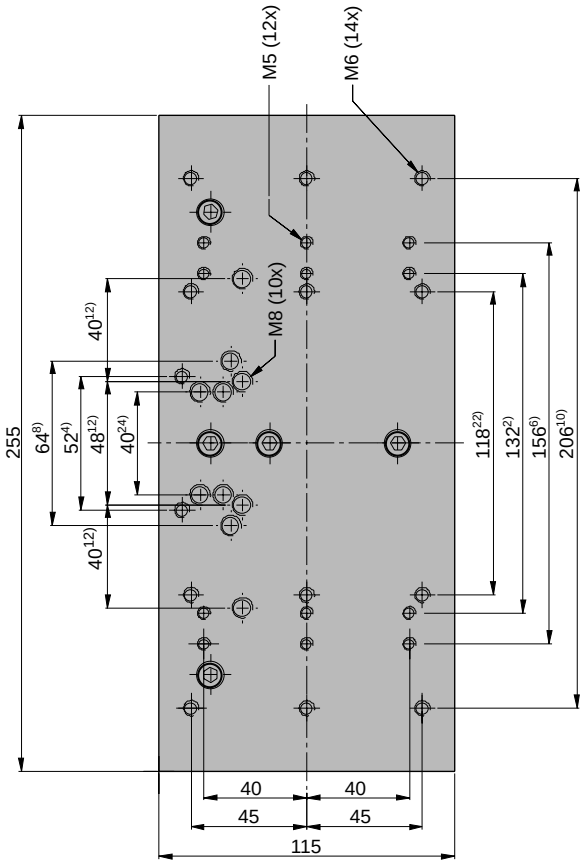

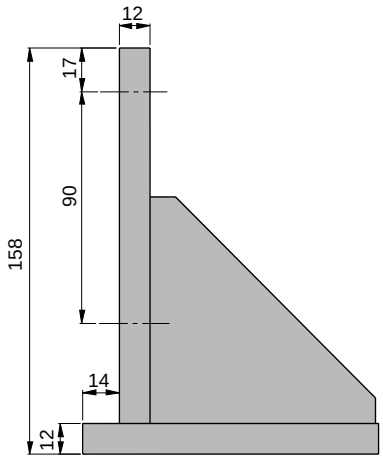

Dimensions with Superscript values, refer to the corresponding available options detailed on data sheet 1.38.001E-4.
e.g. Dimensions with Superscript number [4], corresponds to the option ”EM” for OSP-E25BHD actuator.

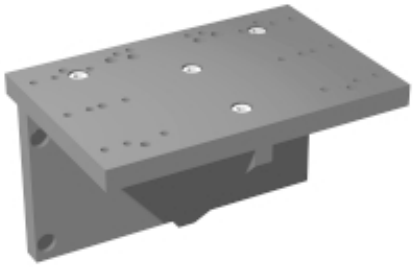

Order Instructions and Weight

Description	Weight(mass) [kg]	**Order No.**
Adapter Plate Type MA3-50	2,3	**12277**

Linear Drives see	1.15.002E, 1.20.002E, 1.25.002E, 1.30.002E, 1.35.002E, 1.35.011E

HOERBIGER ORIGA

Multi-Axis Accessories

Profile Mountings

Size 25, 32, 50

OSP
ORIGA SYSTEM PLUS

For Linear Drive
- **Series OSP-E**

Material:
Anodized aluminum

Stainless steel version on demand.

The mountings are supplied in pairs.

Series OSP-E25 to E50, Type MAE-..

Series OSP-E..

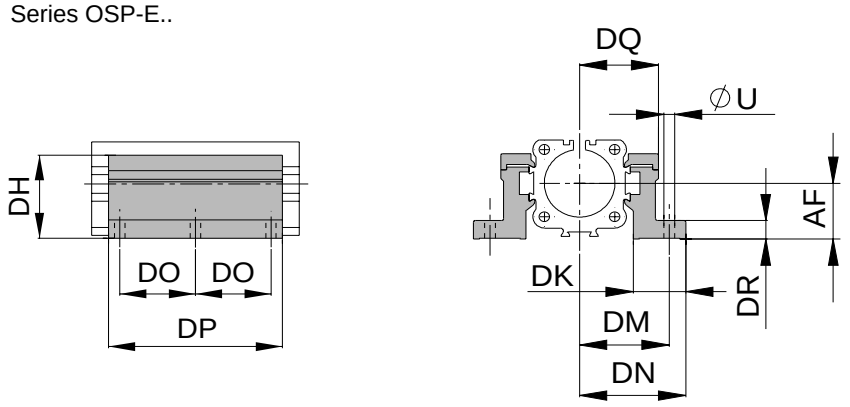

Series OSP-E..BHD

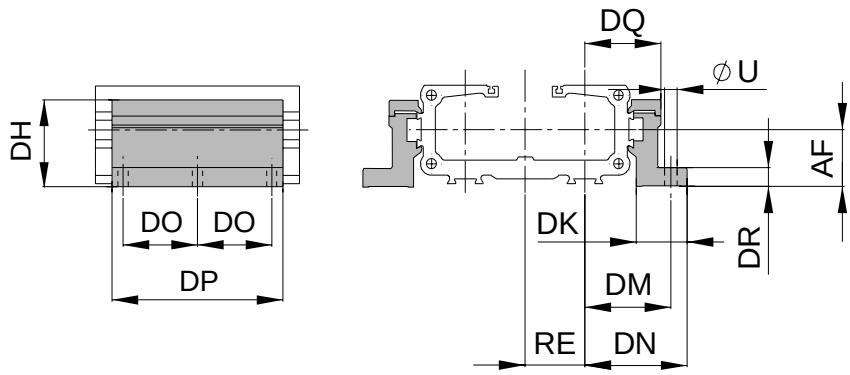

Weight (mass) [kg]

Type	Weight (mass) [kg] (pair)
MAE-25	0,3
MAE-32	0,4
MAE-50	0,8

Dimension Table (mm)

Series	Type	R	U	AF	DF	DH	DK	DM	DN	DO	DP	DQ	DR	DT	EF	EM	EN	EQ	RE	Order No.
OSP-E25	**MAE-25**	M5	5.5	22	27	38	26	40	47.5	40	92	34.5	8	10	41.5	28.5	49	36	26	**12278**
OSP-E32	**MAE-32**	M5	5.5	30	33	46	27	46	54.5	40	92	40.5	10	10	48.5	35.5	57	43	32	**12279**
OSP-E50	**MAE-50**	M6	7	48	40	71	34	59	67	45	112	52	10	11	64	45	72	57	44	**12280**

Linear Drives see 1.15.002E, 1.20.002E, 1.25.002E, 1.30.002E, 1.35.002E, 1.35.011E

HOERBIGER ORIGA

A1P678E00AAH00X

The right to introduce technical modifications is reserved

Multi-Axis Accessories

Complete Intermediate Drive Shaft

Size 25, 32, 50

OSP
ORIGA SYSTEM PLUS

For Linear Drive
• Series OSP-E..BHD

Note:
For Series OSP-E..BHD with integrated gearbox, please contact your local HOERBIGER-ORIGA technical support.

For other series on request.

Features
Backlash-free shaft connection under pre-stress
Design up to speed 1500 rpm
Double cardan connection for larger displacements
Easy to mount

Material:
Aluminium (AL-H) / Steel (St-H)
Polyurethane/Hytrel

For Clamp Shaft with Connection Shaft
Series OSP-E25BHD to E50BHD, Type MAS-

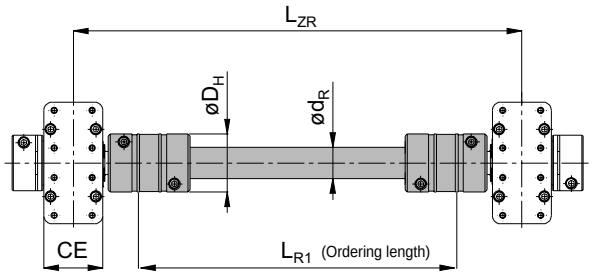

For Hollow Shaft with Keyway
Series OSP-E25BHD to E50BHD, Type MAS-

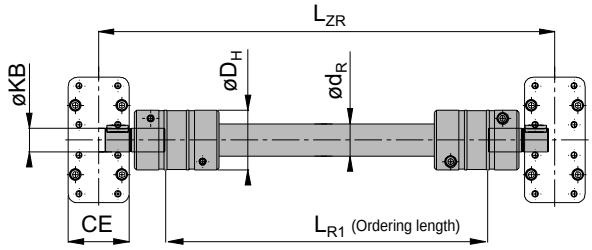

Critical Speed vs for Coupling length

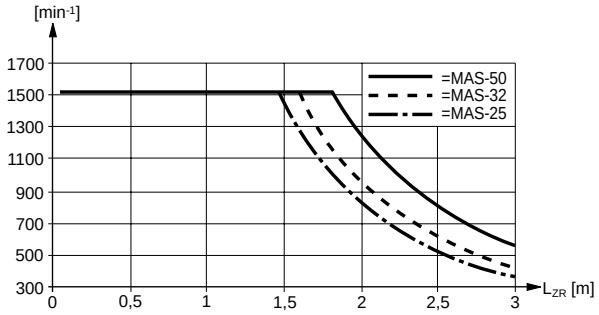

Characteristics / Dimension Table (mm)

Series	Type	Max Torque [Nm]**	CE	D_H	KB***	L_{ZR}	L_{R1}	d_R	Order No.* For Clamp shaft	Order No.* For Hollow shaft
OSP-E25BHD	**MAS-25**	60	42	55	16_{h7}	< 3000	L_{ZR} - 112	30 x 4.0	**12305-...**	**12281 - ....**
OSP-E32BHD	**MAS-32**	60	56	55	22_{h7}	< 3000	L_{ZR} - 126	30 x 4.0	**12306-...**	**12282 - ....**
OSP-E50BHD	**MAS-50**	160	87	65	32_{h7}	< 3000	L_{ZR} - 167	35 x 4.0	**12307-...**	**12283 - ....**

* **Complete with L_{R1} length in mm.**
Example: 12305 - 1200 (L_{R1} length = 1200 mm)
** For higher torque requirement, please contact your local HOERBIGER-ORIGA technical support.
*** Other dimensions for KB on request. See OSP-E..BHD basic unit, data sheet 1.15.002E-4.

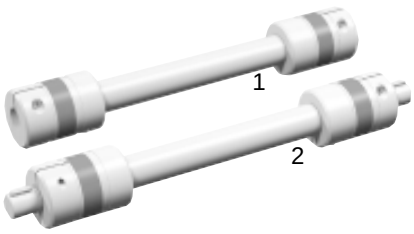

1 = For Clamp Shaft with Connection Shaft
2 = For Hollow Shaft

HOERBIGER ORIGA

Linear Drives see 1.15.002E

A1P679E00AAH00X

The right to introduce technical modifications is reserved

Linear Guides
Series OSP-E

Contents

Description	Data Sheet No.	Page
Overview	1.40.020	91-92
Plain Bearing SLIDELINE	1.40.021	93-94
Roller Guide POWERSLIDE	1.40.022	95-97
Ball Bushing Guide GUIDELINE	1.40.023	99-102
Aluminium Roller Guide PROLINE	1.40.024	103-105

OSP
ORIGA SYSTEM PLUS

Linear Guides

Electric linear drive
– Series OSP-E..B (Belt Driven)
– Series OSP-E..S (Screw Driven)
– Series OSP-E..ST (Screw Driven)

Adaptive modular system

The Origa system plus – OSP – provides a comprehensive range of linear guides for the pneumatic and electric linear drives.

SLIDELINE
The cost-effective plain bearing guide for medium loads.
Not available for OSP-E – Belt Drive series
See data sheet no. 1.40.021E

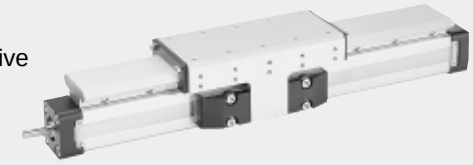

Versions:

Electric linear drive
Series:
- **OSP-E..B**
- **OSP-E..BP** auf Anfrage
- **OSP-E..S**
- **OSP-E..ST**

Sizes:
25 - 32 - 50

Advantages:

- Takes high loads and forces
- High precision
- Smooth operation
- Can be retrofitted
- Can be installed in any position

POWERSLIDE
The roller guide for heavy loads.
See data sheet no. 1.40.022E

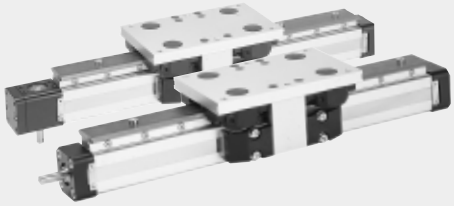

GUIDELINE
The ball bushing guide for the heaviest loads and greatest accuracy.
See data sheet no. 1.40.023E

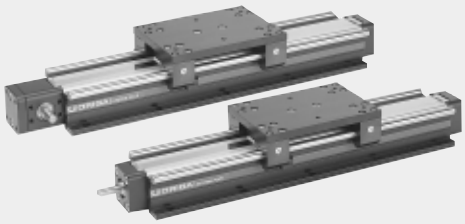

PROLINE
The compact aluminium roller guide for high loads and velocities.
See data sheet no. 1.40.024E

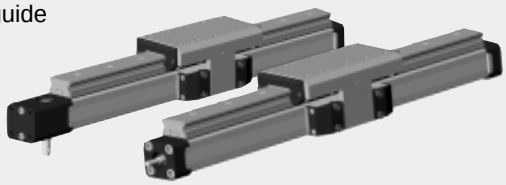

HOERBIGER ORIGA

Plain Bearing Guide SLIDELINE

OSP
ORIGA SYSTEM PLUS

Series SL 25 bis 50
for Linear Drive
• Serie OSP-E Screw

Versions

Standard version
– for electric linear drive:
Series OSP-E Screw

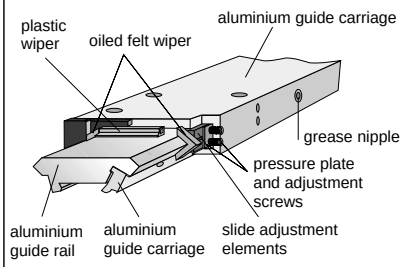

Technical Data

The table shows the maximum permissable values for smooth operation, which should not be exceeded even under dynamic conditions.

The load and moment figures apply to speeds v < 0.2 m/s.

*** Please note:**
In the cushioning diagram, add the mass of the guide carriage to the mass to be cushioned.

Features:

- Anodised aluminium guide rail with prism-shaped slideway arrangement
- Adjustable plastic slide elements – optional with integral brake
- Composite sealing system with plastic and felt wiper elements to remove dirt and lubricate the slideways.
- Corrosion resistant version available on request.

For further technical data see also linear drives OSP-E (1.30.002, 1.35.002).

Loads, forces and moments

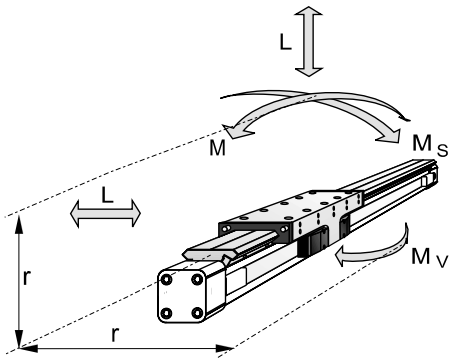

Series	Max. Moments [Nm]			Max. Load [N]	Mass of drive with guide [kg] with 0 mm Stroke OSP-E Screw	inrease per 100 mm Stroke OSP-E Screw	Mass * of guide carriage [kg]	Order-No. SLIDELINE [1] for OSP-E Screw without brake
	M	Ms	Mv	L				
SL 25	34	14	34	675	1.8	0.42	0.61	**20342**
SL 32	60	29	60	925	3.6	0.73	0.95	**20196**
SL50	180	77	180	2000	8.7	1.44	2.06	**20195**

[1] Corrosion resistant fixtures available on request

A1P641E00DZ00X

The right to introduce technical modifications is reserved

Linear drives see data sheet 1.20.002E, 1.25.002E, 1.30.002E, 1.35.002E
Mountings see data sheet 1.45.020E

HOERBIGER ORIGA

Dimensions

Series OSP-E Screw

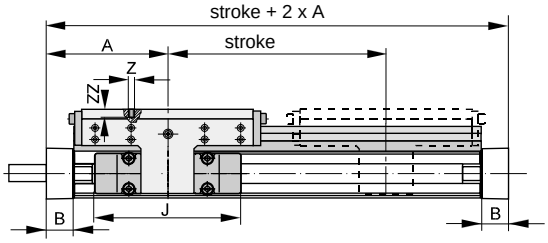

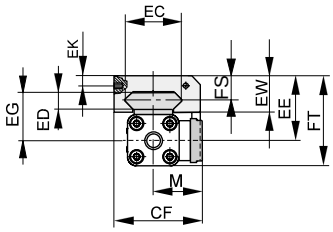

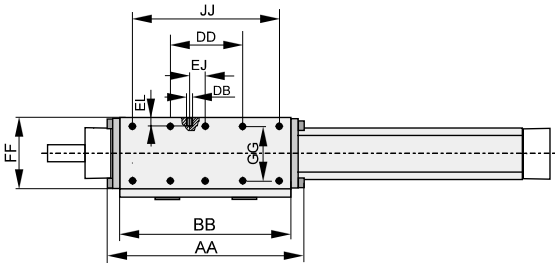

For further mounting elements and options see accessories.
For further information and technical data see data sheets for linear drives OSP-E (1.30.002E,1.35.002E)

Dimension Table (mm)

Series	A OSP-E Screw	B OSP-E Screw	J	M	Z	AA	BB	DB	DD	CF	EC	ED	EE	EG	EJ	EK	EL	EW	FF	FT	FS	GG	JJ	ZZ
SL 25	100	22	117	39.5	M6	162	142	M5	60	72.5	47	12	53	39	22	6	6	30	64	73,5	20	50	120	12
SL 32	125	25.5	152	48	M6	205	185	M5	80	91	67	14	62	48	32	6	6	33	84	88	21	64	160	12
SL 50	175	33	200	61	M6	284	264	M5	120	117	94	14	75	56	81	6	6	39	110	118.5	26	90	240	16

Mid-Section Support

(for versions see 1.45.023E)

Mid-section supports are required from a certain stroke length to prevent excessive deflection and vibration of the linear drive. The diagrams show the maximum permissable unsupported length in relation to loading.

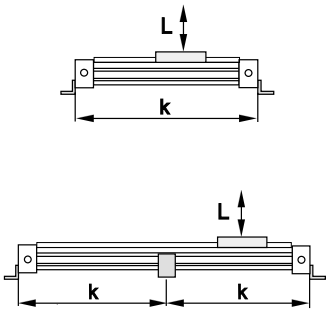

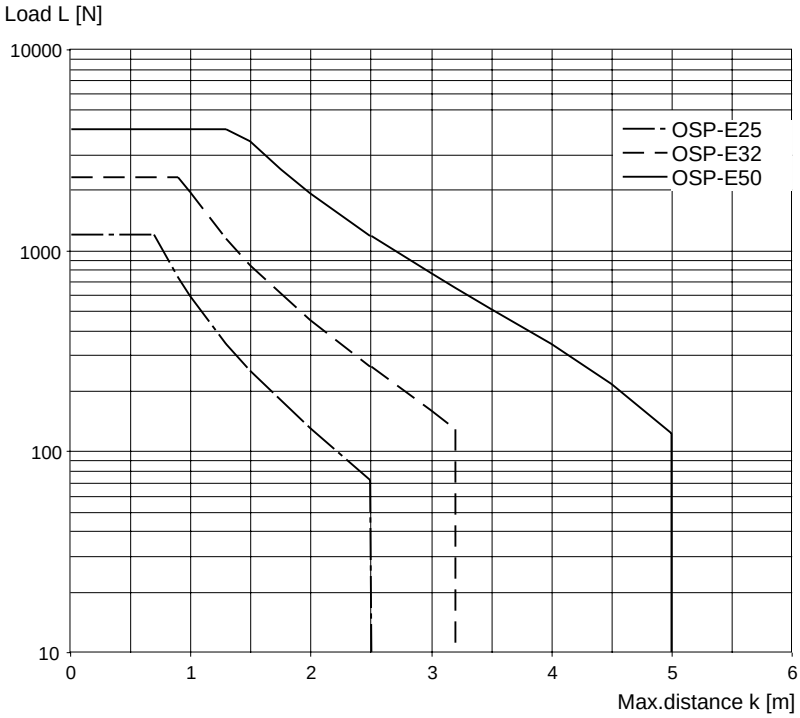

(When loadings are below or up to the curve in the above graph the deflection will be max. 0.2 % of distance k.)
Also note maximum applied load in the chart on data sheet 1.40.021E-1.

Roller Guide POWERSLIDE

OSP
ORIGA SYSTEM PLUS

Series PS 25 to 50
for Linear Drive
- **Serie OSP-E Belt***
- **Serie OSP-E Screw**

Versions

– for electric linear drive:
Series OSP-E Belt
Series OSP-E Screw

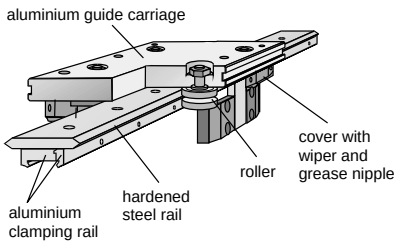

Technical Data

The Table shows the maximum permissable values for smooth operation, which should not be exceeded even under dynamic conditions.

For further information and technical data see data sheets for linear drives OSP-E Belt (1.20.002E,1.25.002E) and OSP-E Ball Screw (1.30.002E,1.35.002E)

Features:

- Anodised aluminium guide carriage with vee rollers having 2 rows of ball bearings
- Hardened steel guide rail
- Several guide sizes can be used on the same drive
- Corrosion resistance version available on request (only for Series OSP-P)
- Max. speed v = 3 m/s,
- Tough roller cover with wiper and grease nipple
- Any length of stroke up to 3500 mm, (longer strokes on request)

Loads, forces and moments

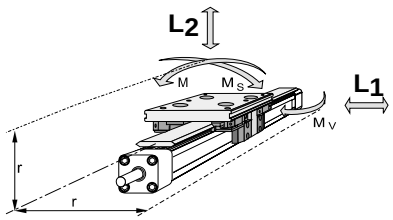

Example: PS 25/35
width of guide rail (35 mm)
size of drive OSP-E25)

*** Series PS for OSP-E Bi-parting version on request**

Series	Max. Moments [Nm] M	Ms	Mv	Max. Load [N] L_1, L_2	Mass of drive with guide [kg] with 0 mm stroke OSP-E Belt	OSP-E Screw	increase per 100 mm stroke OSP-E Belt	OSP-E Screw	Mass * of guide carriage	Order No. Powerslide for [kg] OSP-E* Belt	OSP-E Screw
PS 25/25	63	14	63	910	1.9	1.8	0.30	0.37	0.7	**20304**	**20015**
PS 25/35	70	17	70	1010	2.1	1.9	0.34	0.41	0.8	**20305**	**20016**
PS 25/44	175	20	175	1190	3.0	2.7	0.42	0.49	1.5	**20306**	**20017**
PS 32/35	70	20	70	1400	3.1	3.2	0.51	0.63	0.8	**20307**	**20286**
PS 32/44	175	50	175	2300	4.0	4.1	0.59	0.70	1.5	**20308**	**20287**
PS 50/60	250	90	250	3000	8.8	8.7	1.04	1.36	2.3	**20309**	**20288**
PS 50/76	350	140	350	4000	12.2	12.0	1.28	1.6	4.9	**20310**	**20289**

A1P642E00DZ00X

The right to introduce technical modifications is reserved

Linear drives see data sheet 1.20.002E, 1.25.002E, 1.30.002E, 1.35.002E
Mountings see data sheet 1.45.020E

HOERBIGER ORIGA

Dimensions

Series OSP-E Screw

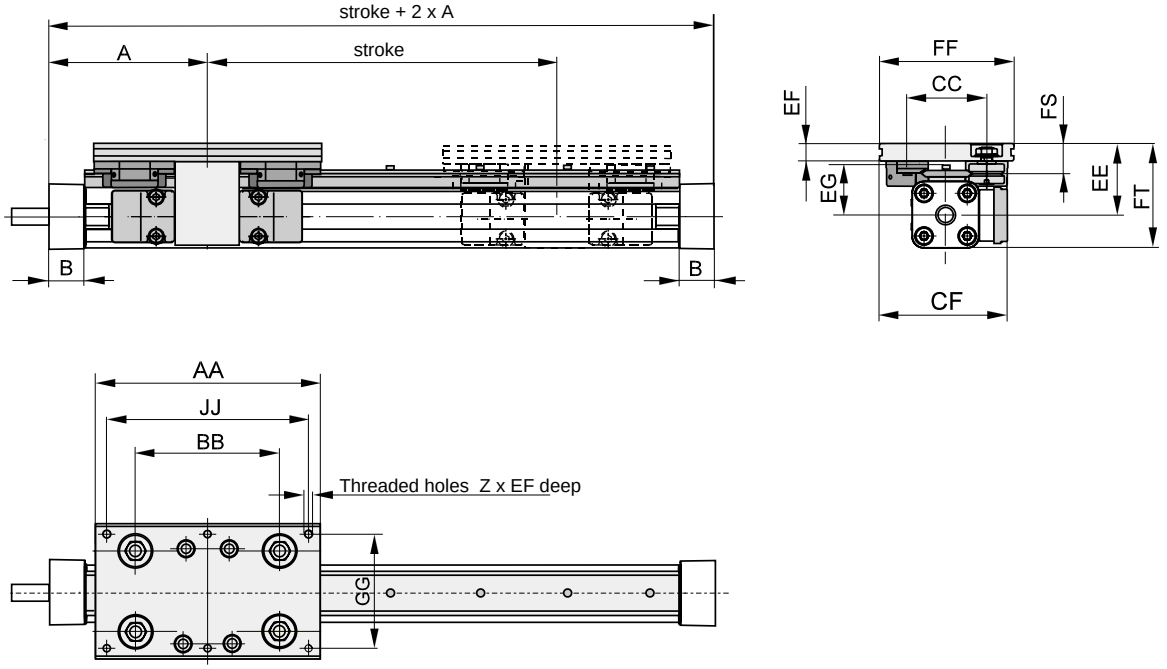

Dimensions

Series OSP-E Belt

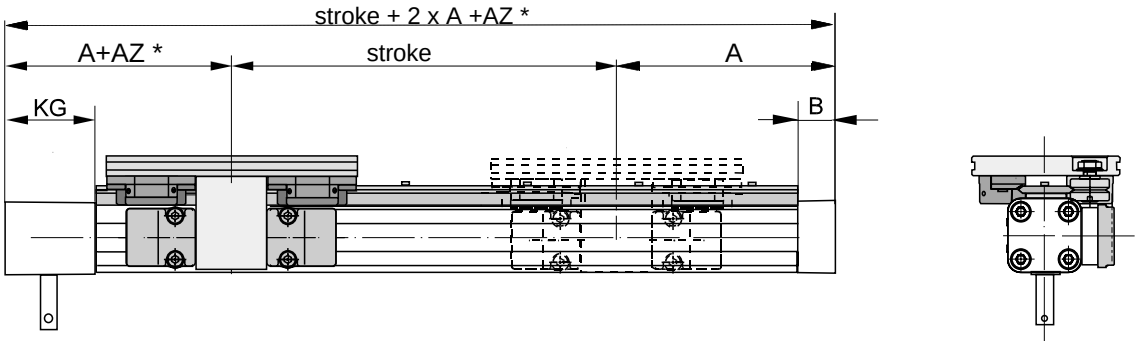

*** Please note:**
The dimension "AZ" must be added to "A". Stroke length to order is stroke + dimension "AZ" + extra length
Please also note the effect of dimension "AZ" when retrofitting a guide. Dimension "AZ" should be deducted from the originally supplied stroke (see data sheet 1.20.002E-6,1.25.002-6E)

Dimension Table (mm)

Series	A OSP-E Belt	A OSP-E Screw	B OSP-E Belt	B OSP-E Screw	Z	AA	AZ	BB	CC	CF	EE	EF	EG	FF	FS	FT	GG	JJ	KG
PS 25/25	125	100	22	22	6xM6	145	5	90	47	79.5	53	11	39	80	20	73.5	64	125	57
PS 25/35	125	100	22	22	6xM6	156	10	100	57	89.5	52.5	12.5	37.5	95	21.5	73	80	140	57
PS 25/44	125	100	22	22	6xM8	190	27	118	73	100	58	15	39	116	26	78.5	96	164	57
PS 32/35	150	125	25	25,5	6xM6	156	–	100	57	95.5	58.5	12.5	43.5	95	21.5	84.5	80	140	61
PS 32/44	150	125	25	25,5	6xM8	190	6	118	73	107	64	15	45	116	26	90	96	164	61
PS 50/60	200	175	25	33	6xM8	240	5	167	89	130.5	81	17	61	135	28.5	123.5	115	216	85
PS 50/76	200	175	25	33	6xM10	280	25	178	119	155.5	93	20	64	185	39	135.5	160	250	85

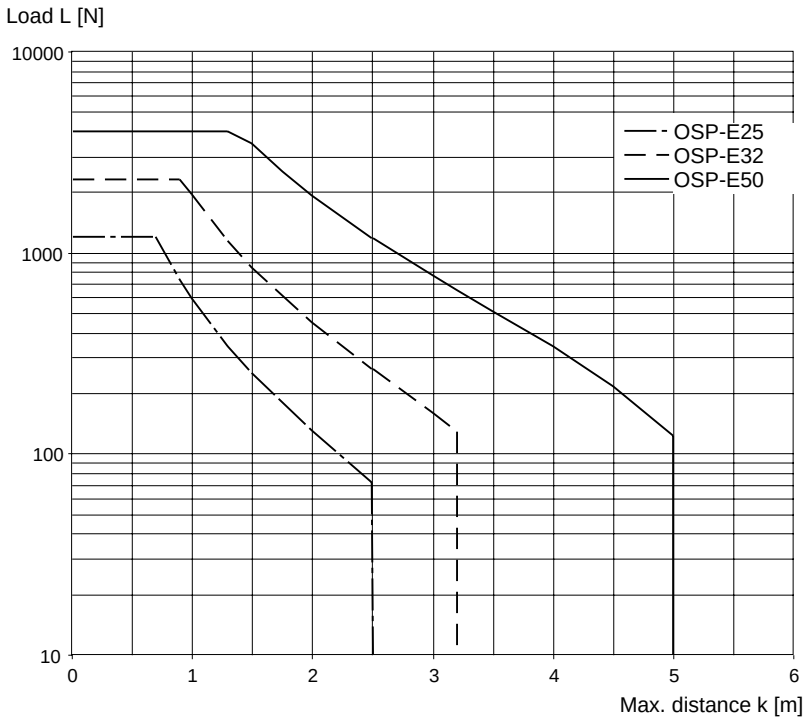

(When loadings are below or up to the curve in the above graph the deflection will be max. 0.2 % of distance k.)
Also note maximum applied load in the chart on data sheet 1.40.022E-1.

Mid-Section Support

(for versions see 1.45.023E,1.25.024E)

Mid-section supports are required from a certain stroke length to prevent excessive deflection and vibration of the linear drive. The diagrams show the maximum permissable unsupported length in relation to loading.

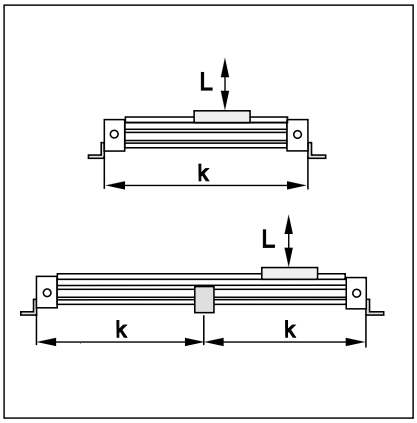

Other Mountings and Options see data sheet 1.45.024.

1. Calculation of load factor L_F

$$L_F = \frac{M}{M_{max}} + \frac{M_S}{M_{S\,max}} + \frac{M_V}{M_{V\,max}} + \frac{L_1}{L_{1max}} + \frac{L_2}{L_{2max}}$$

with combined loads, L_F should not exceed the value 1.

2. Calculation of service life

- **For PS 25/25, PS 25/35 and PS 32/35** — **Service life [km] =** $\frac{106}{(L_F + 0{,}02)^3}$
- **For PS 25/44, PS 32/44 and PS 50/60:** — **Service life [km] =** $\frac{314}{(L_F + 0{,}015)^3}$
- **For PS 50/76:** — **Service life [km] =** $\frac{680}{(L_F + 0{,}015)^3}$

Service life

Calculation of service life is achieved in two stages:

- Determination of load factor L_F from the loads to be carried
- Calculation of service life in km

Lubrication

For maximum system life, lubrication of the rollers must be maintained at all times.

Only high quality Lithium based greases should be used.

Lubrication intervals are dependant on environmental conditions (temperature, running speed, grease quality etc.) therefore the installation should be regularly inspected.

Ball bushing guide GUIDELINE

OSP
ORIGA SYSTEM PLUS

Series GDL 25 to 50
for Linear Drive
- **Series OSP-E Belt ***
- **Series OSP-E Screw**

Versions

– **Versions for linear drive**
Series OSP-E Belt
Series OSP-E Screw

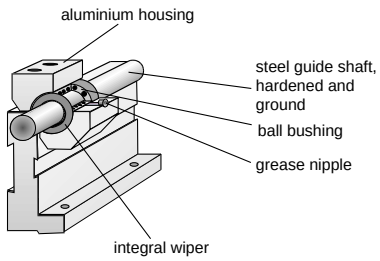

Technical Data

The Table shows the maximum permissable values for smooth operation, which should not be exceeded even under dynamic conditions.

For further information and technical data see data sheets for linear drives OSP-E (1.20.002E,1.25.002E, 1.30.002E, 1.35.002E).

Features

- Anodised aluminium guide rail with four ball bushings
- Hardened and ground steel guide shafts
- Stainless steel guide shafts available on request
- Max. speed v = 3 m/s
- Any length of stroke up to 6000 mm (longer strokes on request)

*** Series GDL for OSP-E Bi-parting version on request**

Loads, forces and moments

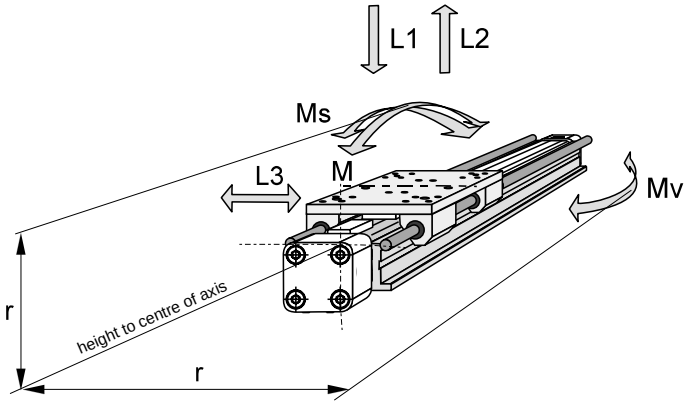

Series	Max. Moments [Nm]			Max. Load [N]			Mass of drive with guide carriage [kg] with 0 mm stroke		increase per 100 mm stroke		Mass of guide carriage [kg]	Order No. GUIDELINE for	
	M	Ms	Mv	L_1	L_2	L_3	OSP-E Belt	OSP-E Screw	OSP-E Belt	OSP-E Screw		OSP-E [1]) Belt	OSP-E[1]) Screw
GDL 25	115	75	90	2500	2100	1650	2.8	2.7	0.62	0.69	1.1	**20315**	**20175**
GDL 32	145	90	115	2500	2100	1650	4.1	4.2	0.82	0.94	1.2	**20182**	**20180**
GDL 50	500	375	355	8000	6250	4400	10,5	10.5	1.70	2.01	2.2	**20316**	**20183**

[1]) Corrosion resistance version available on request (max. loads and moments are 30% lower)

Linear drives see data sheets 1.20.002E, 1.25.002E, 1.30.002E, 1.35.002E
Mountings see data sheet 1.45.020E

A1P643E00DZ00X
The right to introduce technical modifications is reserved

HOERBIGER ORIGA

Dimensions

Series OSP-E Screw

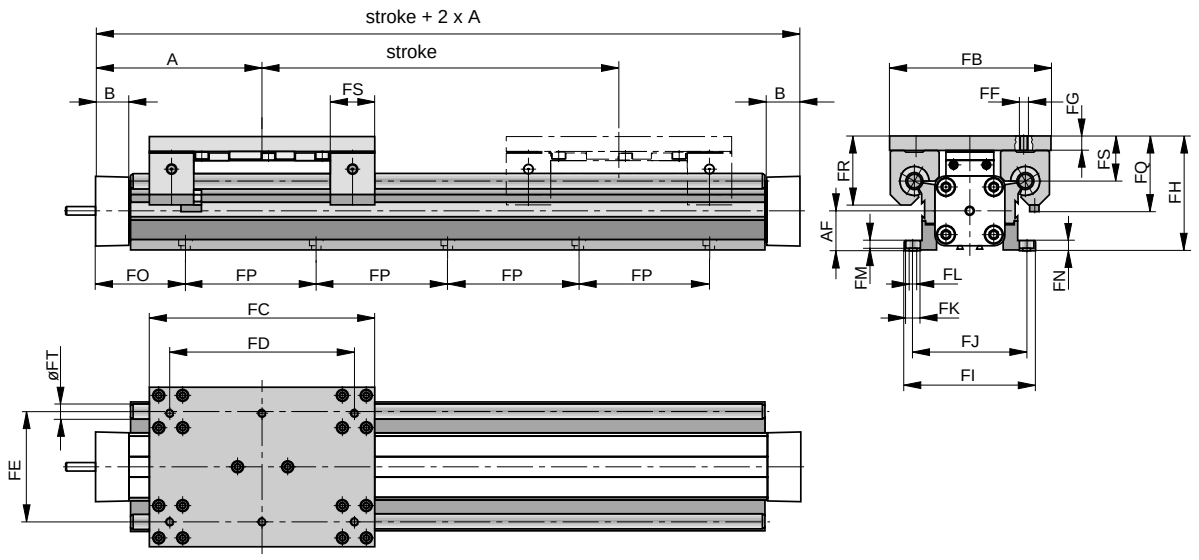

Dimensions

Series OSP-E Belt

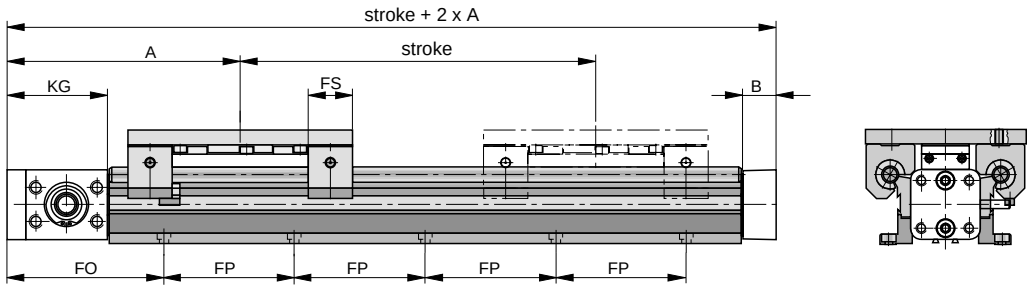

For further options see **1.45.024E**

Note:

The guideline linear guide must be mounted on a flat surface along its entire length. For the OSP-E linear drive, the motor dimensions must be checked relative to the flat surface.

Arrangement of proximity sensors:

Proximity sensors can be fitted anywhere on either side.
The magnet can be screwed on to one of the four ball bushing housings from underneath.

Proximity sensors
– see accessories 1.45.101E
Linear Drives
OSP-E see data sheet 1.20.002E, 1.25.002E, 1.30.002E and 1.35.002E

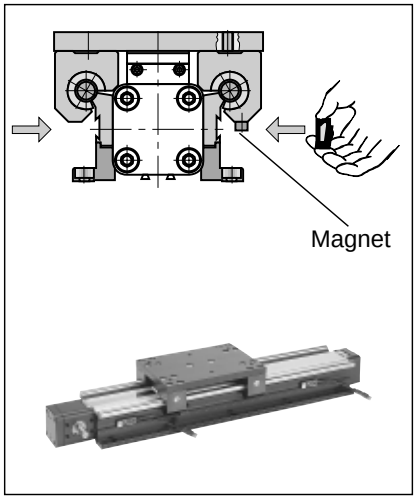

Dimension Table (mm)

Series	A		B		AF	FB	FC	FD	FE	FF	FG	FH	FI	FJ	øFK	øFL	FM	FN	FP	FQ	FR	FS	øFT	FU	KG
	OSP-E Belt	OSP-E Screw	OSP-E Belt	OSP-E Screw																					
GDL 25	125	100	22	22	22	120	145	110	70	M6	11	78	86	73	10.5	6.0	5.7	8	100	56.5	51.5	33.5	12	32	57
GDL 32	150	125	25	25.5	30	120	170	140	80	M6	11	86	98	85	10.5	6.0	5.7	8	100	56.5	51.5	33.5	12	32	61
GDL 50	200	175	25	33	48	180	200	160	120	M8	14	118	134	118	12	7.5	6.8	10	100	73	61	38	16	36	85

FO						
	OSP-E Screw			OSP-E Belt		
X	E25	E32	E50	E25	E32	E50
00	50.0	75.0	75.0	92.0	117.5	129.5
01	50.5	75.5	75.5	92.5	118.0	130.0
02	51.0	76.0	76.0	93.0	118.5	130.5
03	51.5	76.5	76.5	93.5	119.0	131.0
04	52.0	77.0	77.0	94.0	119.5	131.5
05	52.5	77.5	77.5	94.5	120.0	132.0
06	53.0	78.0	78.0	95.0	120.5	132.5
07	53.5	78.5	78.5	95.5	71.0	133.0
08	54.0	79.0	79.0	96.0	71.5	133.5
09	54.5	79.5	79.5	96.5	72.0	134.0
10	55.0	80.0	80.0	97.0	72.5	134.5
11	55.5	80.5	80.5	97.5	73.0	135.0
12	56.0	81.0	81.0	98.0	73.5	135.5
13	56.5	81.5	81.5	98.5	74.0	136.0
14	57.0	82.0	82.0	99.0	74.5	136.5
15	57.5	82.5	82.5	99.5	75.0	137.0
16	58.0	83.0	83.0	100.0	75.5	137.5
17	58.5	83.5	83.5	100.5	76.0	138.0
18	59.0	84.0	84.0	101.0	76.5	138.5
19	59.5	84.5	84.5	101.5	77.0	139.0
20	60.0	85.0	85.0	102.0	77.5	139.5
21	60.5	85.5	85.5	102.5	78.0	140.0
22	61.0	36.0	86.0	103.0	78.5	140.5
23	61.5	36.5	86.5	103.5	79.0	141.0
24	62.0	37.0	87.0	104.0	79.5	141.5
25	62.5	37.5	87.5	104.5	80.0	142.0
26	63.0	38.0	88.0	105.0	80.5	142.5
27	63.5	38.5	88.5	105.5	81.0	143.0
28	64.0	39.0	89.0	106.0	81.5	143.5
29	64.5	39.5	89.5	106.5	82.0	144.0
30	65.0	40.0	90.0	107.0	82.5	144.5
31	65.5	40.5	90.5	107.5	83.0	95.0
32	66.0	41.0	91.0	108.0	83.5	95.5
33	66.5	41.5	91.5	108.5	84.0	96.0
34	67.0	42.0	92.0	109.0	84.5	96.5
35	67.5	42.5	92.5	109.5	85.0	97.0
36	68.0	43.0	93.0	110.0	85.5	97.5
37	68.5	43.5	43.5	110.5	86.0	98.0
38	69.0	44.0	44.0	111.0	86.5	98.5
39	69.5	44.5	44.5	111.5	87.0	99.0
40	70.0	45.0	45.0	112.0	87.5	99.5
41	70.5	45.5	45.5	112.5	88.0	100.0
42	71.0	46.0	46.0	113.0	88.5	100.5
43	71.5	46.5	46.5	113.5	89.0	101.0
44	72.0	47.0	47.0	114.0	89.5	101.5
45	72.5	47.5	47.5	114.5	90.0	102.0
46	73.0	48.0	48.0	115.0	90.5	102.5
47	73.5	48.5	48.5	115.5	91.0	103.0
48	74.0	49.0	49.0	116.0	91.5	103.5
49	74.5	49.5	49.5	116.5	92.0	104.0

FO						
	OSP-E Screw			OSP-E Belt		
X	E25	E32	E50	E25	E32	E50
50	75.0	50.0	50.0	67.0	92.5	104.5
51	75.5	50.5	50.5	67.5	93.0	105.0
52	76.0	51.0	51.0	68.0	93.5	105.5
53	76.5	51.5	51.5	68.5	94.0	106.0
54	77.0	52.0	52.0	69.0	94.5	106.5
55	77.5	52.5	52.5	69.5	95.0	107.0
56	78.0	53.0	53.0	70.0	95.5	107.5
57	78.5	53.5	53.5	70.5	96.0	108.0
58	79.0	54.0	54.0	71.0	96.5	108.5
59	79.5	54.5	54.5	71.5	97.0	109.0
60	80.0	55.0	55.0	72.0	97.5	109.5
61	80.5	55.5	55.5	72.5	98.0	110.0
62	81.0	56.0	56.0	73.0	98.5	110.5
63	81.5	56.5	56.5	73.5	99.0	111.0
64	82.0	57.0	57.0	74.0	99.5	111.5
65	32.5	57.5	57.5	74.5	100.0	112.0
66	33.0	58.0	58.0	75.0	100.5	112.5
67	33.5	58.5	58.5	75.5	101.0	113.0
68	34.0	59.0	59.0	76.0	101.5	113.5
69	34.5	59.5	59.5	76.5	102.0	114.0
70	35.0	60.0	60.0	77.0	102.5	114.5
71	35.5	60.5	60.5	77.5	103.0	115.0
72	36.0	61.0	61.0	78.0	103.5	115.5
73	36.5	61.5	61.5	78.5	104.0	116.0
74	37.0	62.0	62.0	79.0	104.5	116.5
75	37.5	62.5	62.5	79.5	105.0	117.0
76	38.0	63.0	63.0	80.0	105.5	117.5
77	38.5	63.5	63.5	80.5	106.0	118.0
78	39.0	64.0	64.0	81.0	106.5	118.5
79	39.5	64.5	64.5	81.5	107.0	119.0
80	40.0	65.0	65.0	82.0	107.5	119.5
81	40.5	65.5	65.5	82.5	108.0	120.0
82	41.0	66.0	66.0	83.0	108.5	120.5
83	41.5	66.5	66.5	83.5	109.0	121.0
84	42.0	67.0	67.0	84.0	109.5	121.5
85	42.5	67.5	67.5	84.5	110.0	122.0
86	43.0	68.0	68.0	85.0	110.5	122.5
87	43.5	68.5	68.5	85.5	111.0	123.0
88	44.0	69.0	69.0	86.0	111.5	123.5
89	44.5	69.5	69.5	86.5	112.0	124.0
90	45.0	70.0	70.0	87.0	112.5	124.5
91	45.5	70.5	70.5	87.5	113.0	125.0
92	46.0	71.0	71.0	88.0	113.5	125.5
93	46.5	71.5	71.5	88.5	114.0	126.0
94	47.0	72.0	72.0	89.0	114.5	126.5
95	47.5	72.5	72.5	89.5	115.0	127.0
96	48.0	73.0	73.0	90.0	115.5	127.5
97	48.5	73.5	73.5	90.5	116.0	128.0
98	49.0	74.0	74.0	91.0	116.5	128.5
99	49.5	74.5	74.5	91.5	117.0	129.0

Note:

The dimension FO is derived from the last two digits of the stroke:

Example:

Stroke 15 ***25*** mm

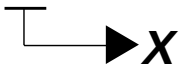

For a cylinder OSP-E25 the adjacent table indicates that for x=25mm:

FO = 62,5 mm

System Life

The calculation for expected service life is achieved in three steps:

- Determination of the load factor L_F, inserting actual values into the adjacent equation
- Determination of guidance constant K_F
- Calculation of the service life in km

Lubrication

For maximum system life, lubrication of the ball bushings must be maintained at all times.

Only high quality Lithium based greases should be used.

Lubrication intervals are dependant on environmental conditions (temperature, running speed, grease quality etc.) therefore the installation should be regularly inspected.

1. Calculation of load factor L_F

$$L_F = \frac{M}{M_{max}} + \frac{M_S}{M_{S\,max}} + \frac{M_V}{M_{V\,max}} + \frac{L_1}{L_{1max}} + \frac{L_2}{L_{2max}} + \frac{L_3}{L_{3max}}$$

with combined loads, L_F should not exceed the value 1.

2. Guidance constant K_F

Installation	guidance constant K_F	
	GDL 25, GDL 32	GDL 40, GDL 50
Horizontal	200	210
Sideways	250	320
Vertical	90	120

3. Service life calculation

Approximate service life is calculated using the following equation:

$$\text{Service life [km]} = \frac{K_F}{L_F^{\,3}}$$

Aluminium Roller Guide PROLINE

OSP
ORIGA SYSTEM PLUS

Versions

Standard versions
– for electric Linear Drive:
Series OSP-E Belt
Series OSP-E Screw

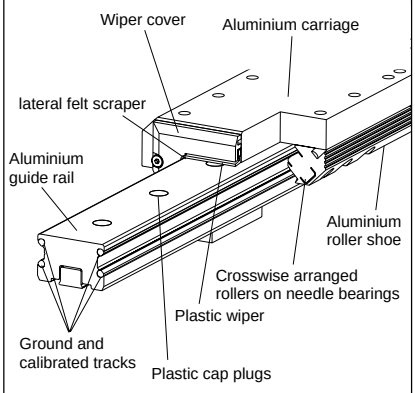

Series PL 25 to 50
for Linear Drive
- **Series OSP-E Belt ***
- **Series OSP-E Screw**

Features:

- High precision
- High velocities (10 m/s)
- Smooth operation - low noise
- Integated wiper system
- Long life lubrication
- Compact dimensions - compatible to Slideline plain bearing guide
- Stainless steel version available on request
- Any length of stroke up to 3750 mm

Technical Data

The table shows the maximal permissible loads. If multiple moments and forces act upon the cylinder simultaneously, the following equation applies:

$$\frac{M}{M_{max}} + \frac{M_S}{M_{S\,max}} + \frac{M_V}{M_{V\,max}} + \frac{L_1}{L_{1max}} + \frac{L_2}{L_{2max}} \leq 1$$

The sum of the loads should not exceed >1

The table shows the maximum permissible values for light, shock-free operation, which must not be exceeded even under dynamic conditions.

For further information and technical data see data sheets for linear drives OSP-E Belt (1.20.002E,1.25.002E) and OSP-E Ball Screw (1.30.002E,1.35.002E)

Loads, Forces and Moments

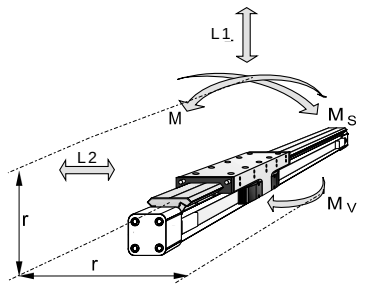

Series	Max. Moments [Nm]			Max. Load [N]	Mass of drive with guide [kg] with 0 mm stroke		inrease per 100 mm stroke		Mass guide-carriage [kg]	Order No. PROLINE [1] for	
	M	Ms	Mv	L1, L2	OSP-E Belt	OSP-E Screw	OSP-E Belt	OSP-E Screw		OSP-E Belt*	OSP-E Screw
PL 25	55	18	55	1060	1.9	1.8	0.33	0.40	0.75	**20874**	**20856**
PL 32	91	36	91	1460	3.6	3.7	0.58	0.70	1.18	**20875**	**20857**
PL 50	313	139	313	3890	8.9	8.8	1.00	1.32	2.50	**20876**	**20859**

[1] Stainless steel version on request

*** Series PL for OSP-E Bi-parting version on request**

A1P644E00DZ00X

The right to introduce technical modifications is reserved

For Linear Drives see 1.20.002E, 1.25.002E, 1.30.002E, 1.35.002E
For Mountings see 1.45.020E

HOERBIGER ORIGA

Dimension Table (mm) Series OSP-E-Screw PL25, PL32, PL50

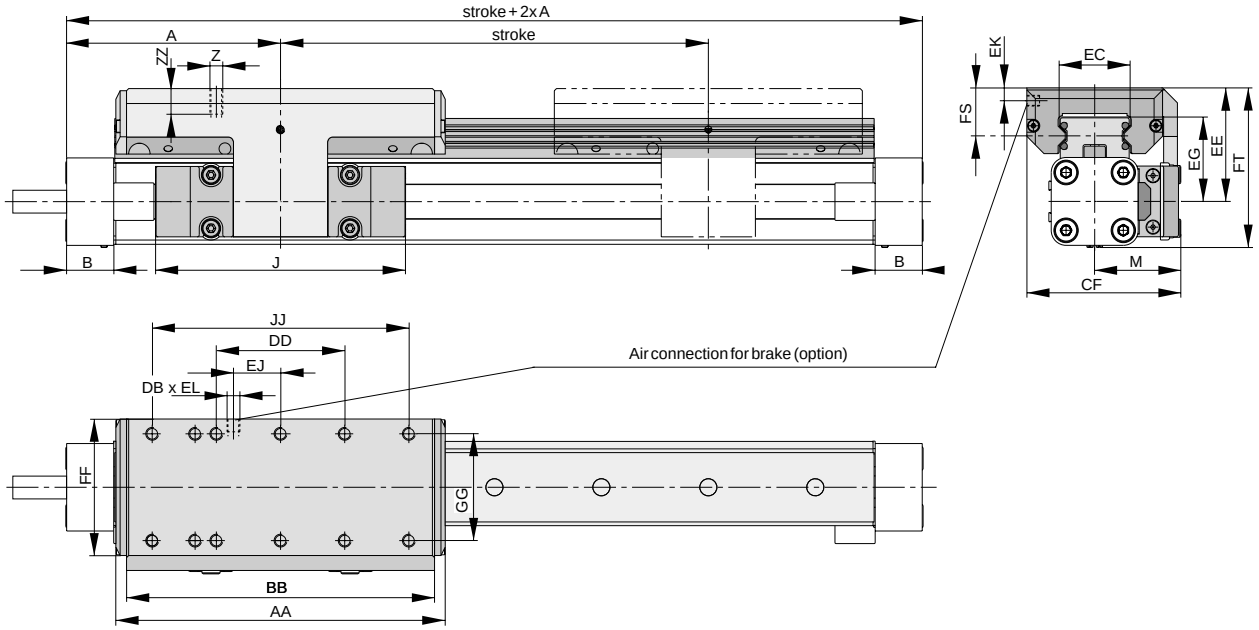

Dimension Table (mm) OSP-E-Screw PL25, PL32, PL50

Serie	A	B	J	M	Z	AA	BB	DB	DD	CF	EC	EE	EG	EJ	EK	EL	FF	FS	FT	GG	JJ	ZZ
PL25	100	22	117	40.5	M6	154	144	M5	60	72.5	32.5	53	39	22	6	6	64	23	73.5	50	120	12
PL32	125	25.5	152	49	M6	197	187	M5	80	91	42	62	48	32	6	6	84	25	88	64	160	12
PL50	175	33	200	62	M6	276	266	M5	120	117	63	75	57	81	6	6	110	29	118.5	90	240	16

Dimensions Series OSP-E-Belt PL25, PL32, PL50

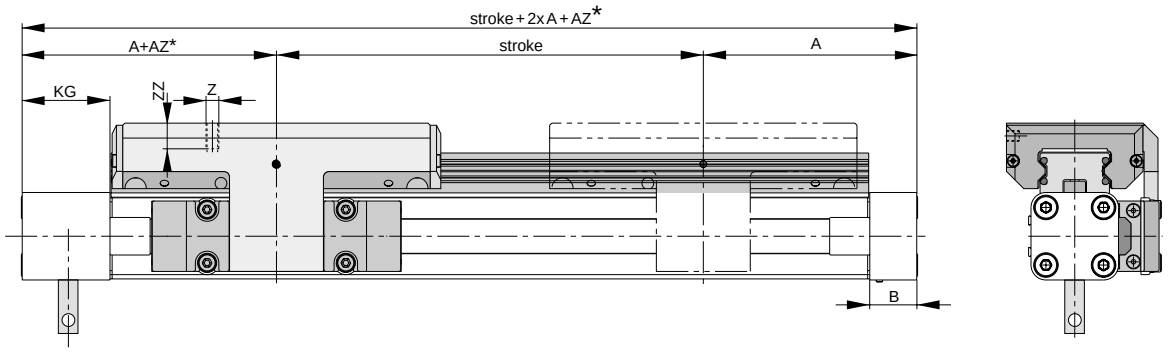

*** Please note:**
The dimension "AZ" must be added to "A". Stroke length to order is stroke + dimension "AZ" + extra length
Please also note the effect of dimension "AZ" when retrofitting a guide. Dimension "AZ" should be deducted from the originally supplied stroke (see data sheet 1.20.002E-6,1.25.002-6E)

Dimension Table (mm) Series OSP-E-Belt PL25, PL32, PL50

Serie	A	B	J	M	Z	AA	AZ	BB	DB	DD	CF	EC	EE	EG	EJ	EK	EL	FF	FT	GG	JJ	KG	ZZ
PL25	125	22	117	40.5	M6	154	10	144	M5	60	72.5	32.5	53	39	22	6	6	64	73.5	50	120	57	12
PL32	150	25	152	49	M6	197	11	187	M5	80	91	42	62	48	32	6	6	84	88	64	160	61	12
PL50	200	25	200	62	M6	276	24	266	M5	120	117	63	75	57	81	6	6	110	118.5	90	240	85	16

Mid-Section Support

(for versions see
1.45.023E,1.25.024E)

Mid-section supports are required from a certain stroke length to prevent excessive deflection and vibration of the linear drive. The diagrams show the maximum permissable unsupported length in relation to loading.

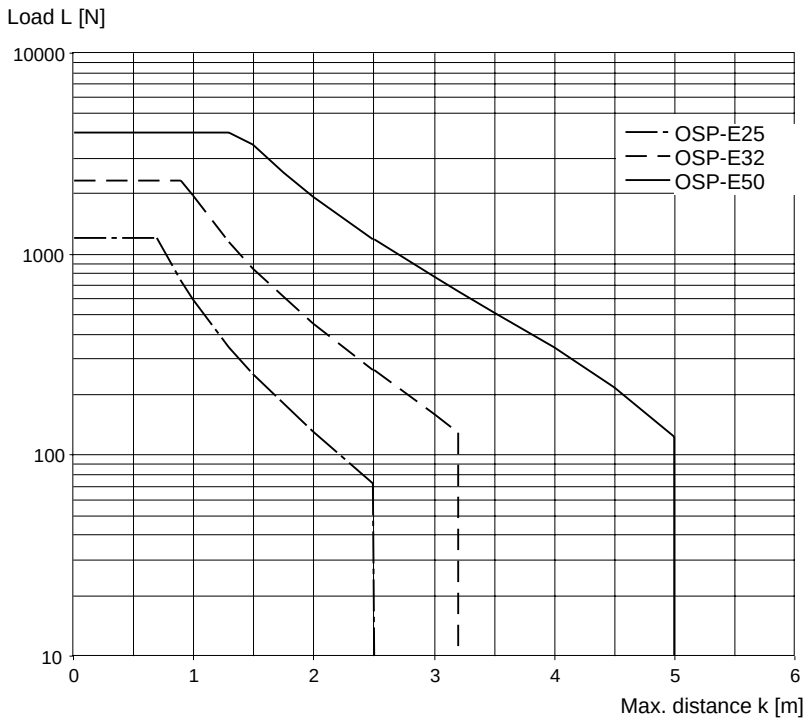

(When loadings are below or up to the curve in the above graph the deflection will be max. 0.2 % of distance k.)
Also note maximum applied load in the chart on data sheet 1.40.024E-1.

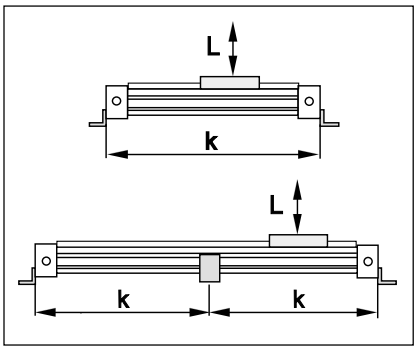

Accessories for Linear Drive Systems (Mountings, Sensors, Piston Rod Elements) Series OSP-E

Contents

Description	Data Sheet No.	Page
Clevis Mounting	1.45.021	109
End Cap Mountings	1.45.022	111-113
End Cap Mountings (for Linear Drives with guides)	1.45.024	119-120
Mid-Section Support	1.45.023	117-118
Mid-Section Support (for Linear Drives with guides)	1.45.024	121
Inversion Mounting	1.45.025	123
Adaptor Profile	1.45.026	125
T-Nut Profile	1.45.027	126
Motor Mounting for Series OSP-E Belt (Coupling housing)	1.45.028	127
Motor Mounting for Series OSP-EBHD Belt (Coupling housing and motor flange)	1.45.028	128
Motor Mounting for Series OSP-E Ball Screw (Coupling housing)	1.45.029	129
Proximity Sensors	1.45.101	133-135
Flange Mounting C (only Series OSP-E..SR)	1.45.022	114
Trunnion Mounting EN (only Series OSP-E..SR)	1.45.022	115
Pivot for Trunnion Mounting (only Series OSP-E..SR)	1.45.022	115
Piston Rod Clevis acc. to ISO 8140 (only Series OSP-E..SR)	1.45.030	131
Piston Rod Eye acc. to ISO 8139 (only Series OSP-E..SR)	1.45.030	131
Piston Rod Compensating Coupling (only Series OSP-E..SR)	1.45.030	132

HOERBIGER ORIGA

Linear Drive Acccessories	
Description	Data Sheet No.
Clevis Mounting	1.45.021E
End Cap Mountings	1.45.022E
End Cap Mountings (for Linear Drives with guides)	1.45.024E
Mid-Section Support	1.45.023E
Mid-Section Support (for Linear Drives with guides)	1.45.024E
Inversion Mounting	1.45.025E
Adaptor Profile	1.45.026E
T-Nut Profile	1.45.027E
Motor Mounting for Series OSP-E Belt (Coupling housing)	1.45.028E-1
Motor Mounting for Series OSP-EBHD Belt (Coupling housing) 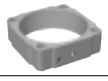	1.45.028E-2
Motor Mounting for Series OSP-E Ball Screw (Coupling housing)	1.45.029E
Proximity Sensors	1.45.101E
Flange Mounting C (only Series OSP-E..SR)	1.45.022E
Trunnion Mounting EN (only Series OSP-E..SR)	1.45.022E
Pivot for Trunnion Mounting (only Series OSP-E..SR)	1.45.022E
Piston Rod Clevis according to ISO 8140 (only Series OSP-E..SR)	1.45.030E
Piston Rod Eye according to ISO 8139 (only Series OSP-E..SR)	1.45.030E
Piston Rod Compensating Coupling (only Series OSP-E..SR)	1.45.030E

A3P111E00DZ00X

The right to introduce technical modifications is reserved

Accessories for Linear Drive Systems (Mountings, Sensors, Piston Rod Elements) Series OSP-E

Contents

Description	Data Sheet No.	Page
Clevis Mounting	1.45.021	109
End Cap Mountings	1.45.022	111-113
End Cap Mountings (for Linear Drives with guides)	1.45.024	119-120
Mid-Section Support	1.45.023	117-118
Mid-Section Support (for Linear Drives with guides)	1.45.024	121
Inversion Mounting	1.45.025	123
Adaptor Profile	1.45.026	125
T-Nut Profile	1.45.027	126
Motor Mounting for Series OSP-E Belt (Coupling housing)	1.45.028	127
Motor Mounting for Series OSP-EBHD Belt (Coupling housing and motor flange)	1.45.028	128
Motor Mounting for Series OSP-E Ball Screw (Coupling housing)	1.45.029	129
Proximity Sensors	1.45.101	133-135
Flange Mounting C (only Series OSP-E..SR)	1.45.022	114
Trunnion Mounting EN (only Series OSP-E..SR)	1.45.022	115
Pivot for Trunnion Mounting (only Series OSP-E..SR)	1.45.022	115
Piston Rod Clevis acc. to ISO 8140 (only Series OSP-E..SR)	1.45.030	131
Piston Rod Eye acc. to ISO 8139 (only Series OSP-E..SR)	1.45.030	131
Piston Rod Compensating Coupling (only Series OSP-E..SR)	1.45.030	132

HOERBIGER ORIGA

Linear Drive Acccessories	
Description	Data Sheet No.
Clevis Mounting	1.45.021E
End Cap Mountings	1.45.022E
End Cap Mountings (for Linear Drives with guides)	1.45.024E
Mid-Section Support	1.45.023E
Mid-Section Support (for Linear Drives with guides)	1.45.024E
Inversion Mounting	1.45.025E
Adaptor Profile	1.45.026E
T-Nut Profile	1.45.027E
Motor Mounting for Series OSP-E Belt (Coupling housing)	1.45.028E-1
Motor Mounting for Series OSP-EBHD Belt (Coupling housing) 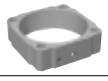	1.45.028E-2
Motor Mounting for Series OSP-E Ball Screw (Coupling housing)	1.45.029E
Proximity Sensors	1.45.101E
Flange Mounting C (only Series OSP-E..SR)	1.45.022E
Trunnion Mounting EN (only Series OSP-E..SR)	1.45.022E
Pivot for Trunnion Mounting (only Series OSP-E..SR)	1.45.022E
Piston Rod Clevis according to ISO 8140 (only Series OSP-E..SR)	1.45.030E
Piston Rod Eye according to ISO 8139 (only Series OSP-E..SR)	1.45.030E
Piston Rod Compensating Coupling (only Series OSP-E..SR)	1.45.030E

A3P111E00DZ00X

The right to introduce technical modifications is reserved

Linear Drive Accessories

Clevis Mounting

Size 25, 32, 50

OSP
ORIGA SYSTEM PLUS

For Linear Drives
- **Series OSP-E Belt**
- **Series OSP-E Screw**

When external guides are used, parallelism deviations can lead to mechanical strain on the piston. This can be avoided by the use of a clevis mounting.
In the drive direction, the mounting has very little play.
Freedom of movement is provided as follows:

- **Tilting in direction of movement**
- **Vertical compensation**
- **Tilting sideways**
- **Horizontal compensation**

A stainless steel version is also available.

Series OSP-E25 to E32

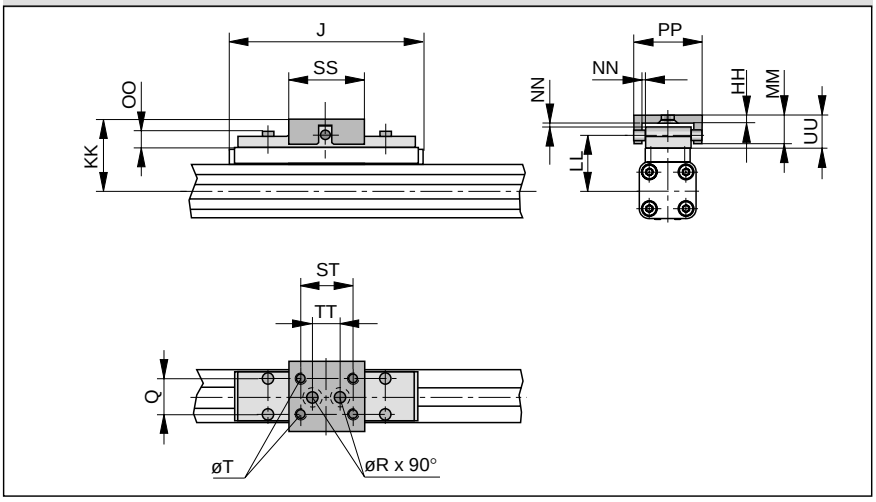

Series OSP-E50

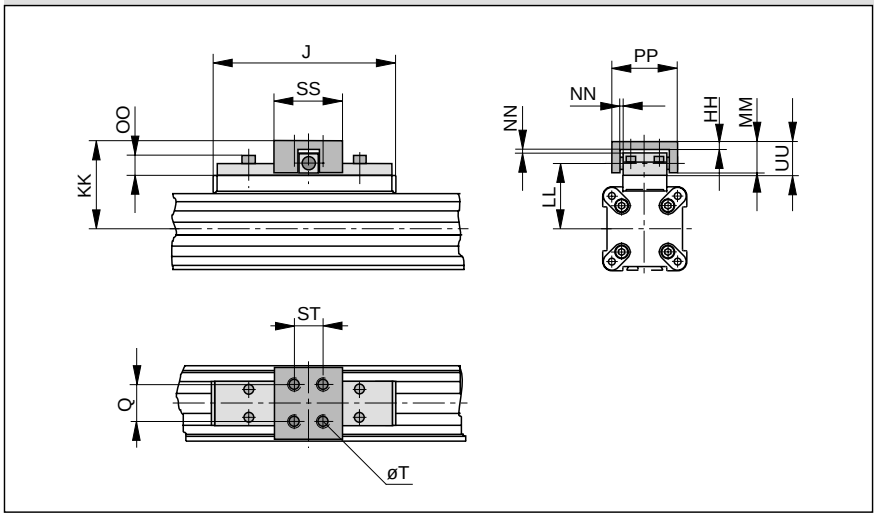

Dimension Table (mm)

Series	J	Q	T	øR	HH	KK	LL	MM	NN*	OO	PP	SS	ST	TT	UU	Order No. Standard	Order No. Stainless
OSP-E25	117	16	M5	5.5	3.5	52	39	19	2	9	38	40	30	16	21	**20005**	**20092**
OSP-E32	152	25	M6	6.6	6	68	50	28	2	13	62	60	46	40	30	**20096**	**20094**
OSP-E50	200	25	M6	–	6	79	61	28	2	13	62	60	46	–	30	**20097**	**20095**

* Dimension NN gives the possible plus and minus play in horizontal and vertical movement, which also makes tilting sideways possible.

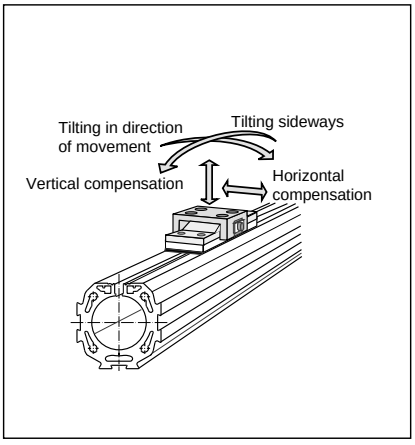

Please note:
When using additional inversion mountings, take into account the dimensions in data sheet 1.45.025E.

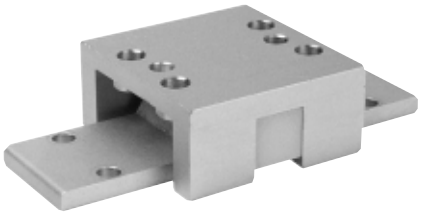

HOERBIGER ORIGA

A1P645E00DZ00X

The right to introduce technical modifications is reserved

Linear Drive Accessories

End Cap Mountings

Size 25, 32, 50

OSP
ORIGA SYSTEM PLUS

For Linear Drive
- **Series OSP-E Belt**
- **Series OSP-E Screw ***

On the end-face of each end cap there are four threaded holes for mounting the actuator.
The hole layout is square, so that the mounting can be fitted to the bottom, top or either side.

Material:
Series OSP-25 to 32:
Galvanised steel.
Series OSP-50:
Anodized aluminium.

The mountings are supplied in pairs.

Series OSP-E25 to E32: Type A1

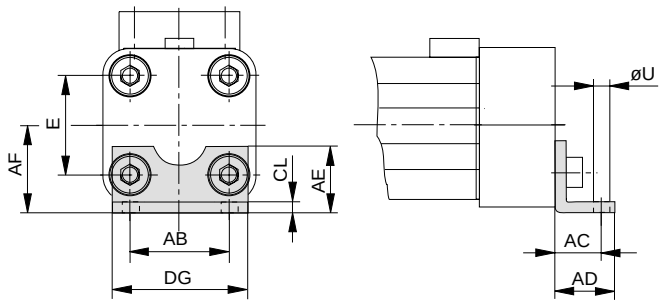

Series OSP-E50: Type C1

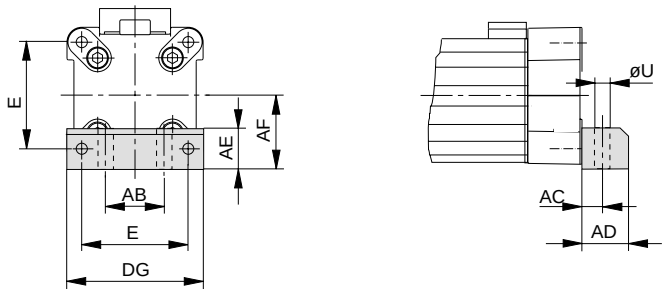

Dimension Table (mm)

Series	E	ØU	AB	AC	AD	AE	AF	CL	DG	Order No. (* Type A1	Order No. (* Type C1
OSP-E25	27	5.8	27	16	22	18	22	2.5	39	**2010**	**–**
OSP-E32	36	6.6	36	18	26	20	30	3	50	**3010**	**–**
OSP-E50	70	9	40	12.5	24	30	48	–	86	**–**	**5010**

(*= Pair

*** Important:**
With the OSP-E Screw series, the end cap mounting can only be used at the opposite end of the drive shaft.

We recommend the application of two mid section supports (data sheet 1.45.023E) at the drive shaft end of the actuator.

HOERBIGER ORIGA

A1P645E00DZ00X

The right to introduce technical modifications is reserved

Linear Drive Accessories

End Cap Mountings

Size 25, 32, 50

OSP
ORIGA SYSTEM PLUS

For Linear Drive with integrated Roller Guide

- **Series OSP-E..BHD**

On the end-face of each end cap there are eight threaded holes for mounting the actuator.

Material:
Anodized aluminium.

The mountings are supplied in pairs.

Series OSP-E25BHD to E32BHD: Type C25, C32

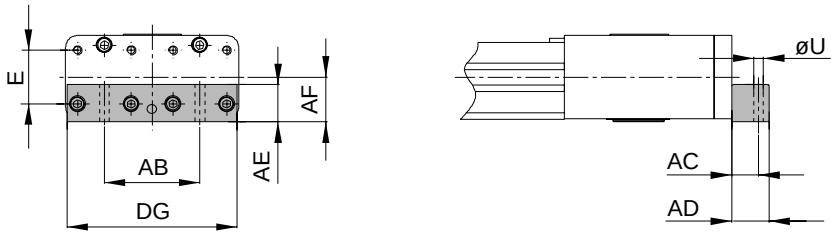

Series OSP-E50BHD: Type C50

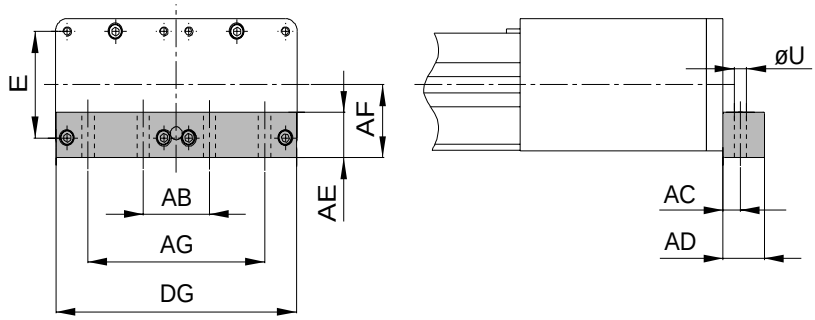

Dimension Table (mm)

Series	Type	E	ØU	AB	AC	AD	AE	AF	AG	DG	Order No.*
OSP-E25BHD	**C25**	27	6.6	52	16	25	25	22	–	91	**12266**
OSP-E32BHD	**C32**	36	9	64	18	25	25	30	–	114	**12267**
OSP-E50BHD	**C50**	70	9	48	12.5	30	30	48	128	174	**12268**

(*= Pair

HOERBIGER ORIGA

Linear Drive Accessories

End Cap Mountings

Size 25, 32, 50

OSP
ORIGA SYSTEM PLUS

For Linear Drive with Trapezoidal Screw and extending rod

- **Series OSP-E..SR**

On the end-face of each end cap there are four threaded holes for mounting the actuator.
The hole layout is square, so that the mounting can be fitted to the bottom, top or either side.

Material:
Series OSP-25 to 32:
Galvanised steel.
Series OSP-50:
Anodized aluminium.

The mountings are supplied in piece

Series OSP-E25SR to E32SR: Type A1SR

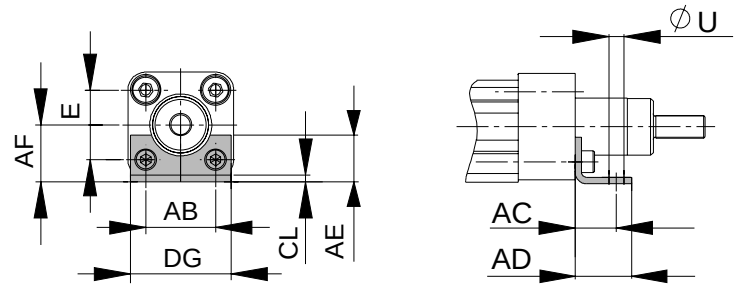

Series OSP-E50SR: Type C1SR

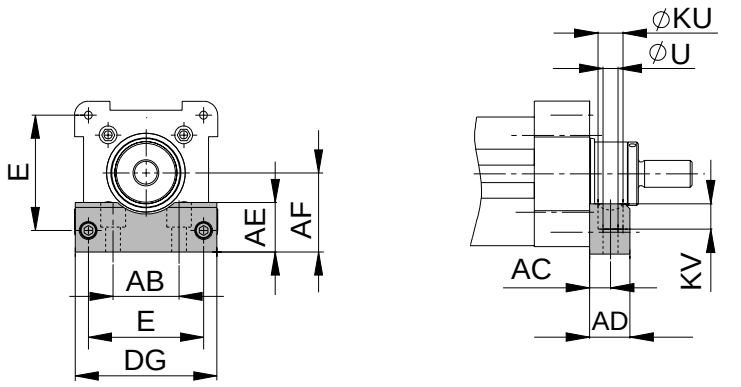

Dimension Table (mm)

Series	E	øU	AB	AC	AD	AE	AF	CL	DG	øKU	KV	Order No.* Type A1SR	Type C1SR
OSP-E25SR	27	5.8	27	16	22	18	22	2.5	39	–	–	**12263**	–
OSP-E32SR	36	6.6	36	18	26	20	30	3	50	–	–	**12264**	–
OSP-E50SR	70	9	40	12.5	24	30	48	–	86	15	15	**–**	**12265**

(*= piece

*** Important:**
With the OSP-E Screw series, the end cap mounting can only be used at the opposite end of the drive shaft.

We recommend the application of two mid section supports (data sheet 1.45.023E) at the drive shaft end of the actuator.

HOERBIGER ORIGA

Linear Drive Accessories

Flange Mounting C

Size 25, 32, 50

OSP
ORIGA SYSTEM PLUS

For Linear Drive with Trapezoidal Screw and extending rod

- **Series OSP-E..SR**

The flange mounting C-E can only be mounted at the piston rod side of the linear drive.

Material:
Aluminium

Series OSP-E25SR to E32SR: Type C-E..

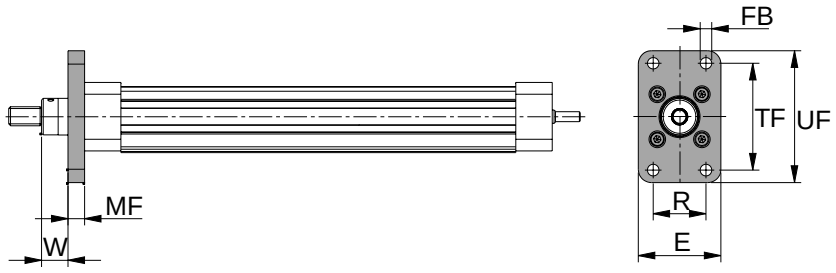

Dimension Table (mm) for Flange Mounting C-E..

Series	Type	ø FB	E	MF	R	TF	UF	W	Order No.
OSP-E25SR	**C-E25**	7	50	10	32	64	79	16	**12232**
OSP-E32SR	**C-E32**	9	56	10	36	72	90	16	**12233**
OSP-E50SR	**C-E50**	12	100	16	63	126	153	21	**12234**

HOERBIGER ORIGA

Linear Drive Accessories

Trunnion Mounting EN

Size 25, 32, 50

For Linear Drive with Trapezoidal Screw and extending rod

- **Series OSP-E..SR**

The trunnion mounting is fitted to the dovetail rails of the actuator profile

The mountings are supplied in pairs.

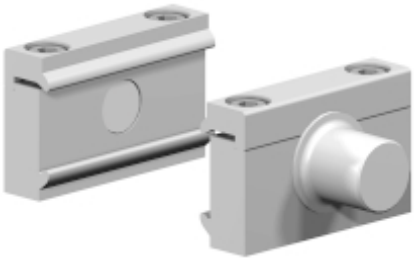

Series OSP-E25SR to E50SR: Type EN-E..

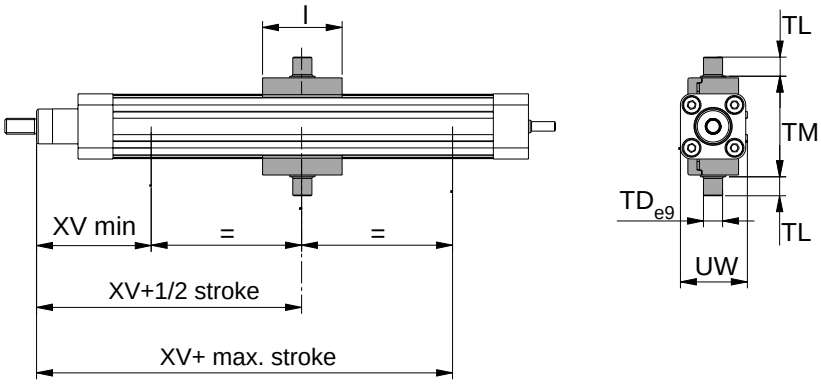

Material: Aluminium

Dimension Table (mm) for Trunnion Mounting EN

Series	Type	l	ø TD e9	TL	TM	UW	XV min	XV+ 1/2stroke	XV+ max. stroke	Order No.
OSP-E25SR	EN-E25	50	12	12	63	42	73	83	62	12235
OSP-E32SR	EN-E32	50	16	16	75	52	76.5	90	69.5	12236
OSP-E50SR	EN-E50	80	20	20	108	87	110	110	84	12237

Pivot EL for Trunnion Mounting EN

Size 25, 32, 50

For Linear Drive with Trapezoidal Screw and extending rod

- **Series OSP-E..SR**

The mountings are supplied in pairs.

Series OSP-E25SR to E50SR: Type EL

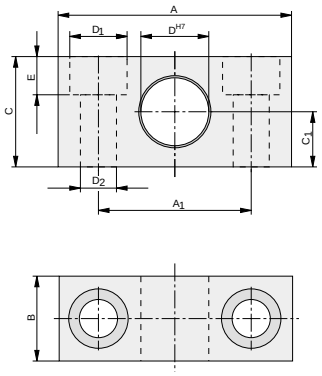

Material: Aluminium

Dimension Table (mm) for Pivot EL

Series	Type	A	A_1	B	C	C_1	$øD^{H7}$	$øD_1$	$øD_2$	E	Weight (Mass) (kg)	Order No.
OSP-E25SR	EL-032	55	36	20	26	13	12	13.5	8.4	9	0.06	PD 23381
OSP-E32SR	EL-040/050	55	36	20	26	13	16	13.5	8.4	9	0.06	PD 23382
OSP-E50SR	EL-063/080	65	42	25	30	15	20	16.5	10.5	11	0.10	PD 23383

Linear Drive Accessories

Mid-Section Support

Size 25, 32, 50

OSP
ORIGA SYSTEM PLUS

For Linear Drive

- **Series OSP-E Belt**
- **Series OSP-E Screw**

Note on Types E1 and D1:
The mid-section support can also be mounted on the underside of the actuator, in which case its distance from the centre of the actuator is different.

For design notes, see data sheet 1.20.002E-3,1.25.002E-3, 1.30.002E-3,1.35.002E-3

Stainless steel version on request

Series OSP-E25, E32, E50, Type E1
(Mounting from above / below with 2 through holes)

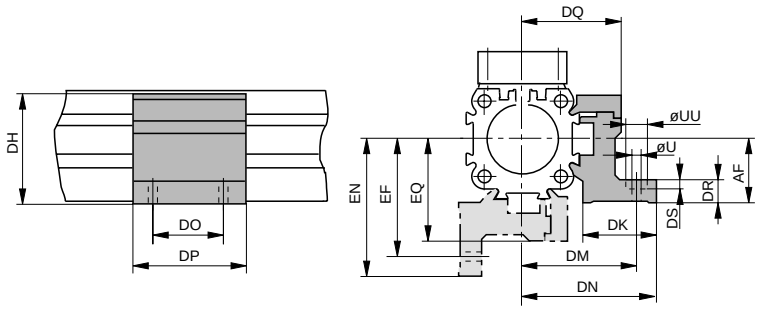

Series OSP-E25, E32, E50, Type D1
(Mountings from below with 2 screws)

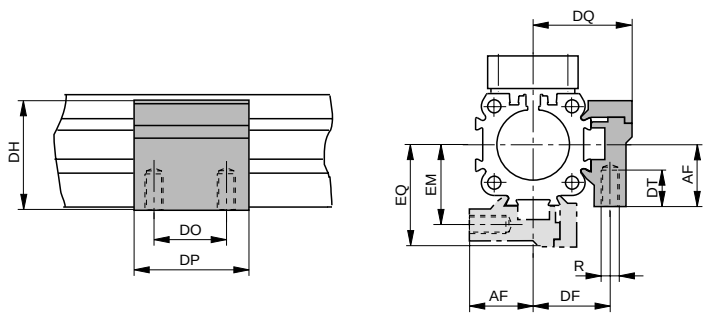

Dimension Table (mm)

Series	R	U	UU	AF	DF	DH	DK	DM	DN	DO	DP	DQ	DR	DS	DT	EF	EM	EN	EQ	Order No. Type E1	Order No. Type D1
OSP-E25	M5	5,5	10	22	27	38	26	40	47,5	36	50	34,5	8	5,7	10	41,5	28,5	49	36	**20009**	**20008**
OSP-E32	M5	5,5	10	30	33	46	27	46	54,5	36	50	40,5	10	5,7	10	48,5	35,5	57	43	**20158**	**20157**
OSP-E50	M6	7	–	48	40	71	34	59	67	45	60	52	10	–	11	64	45	72	57	**20163**	**20162**

HOERBIGER ORIGA

A1P647E00DZ00X

The right to introduce technical modifications is reserved

Linear Drive Accessories

Mid-Section Support

Size 25, 32, 50

OSP
ORIGA SYSTEM PLUS

For Linear Drive with intergrated Roller Guide

- **Series OSP-E ..BHD**

Note on Types E1 and D1:
The mid-section support can also be mounted on the underside of the actuator, in which case its distance from the centre of the actuator is different.

For design notes, see data sheet Datenblatt 1.15.002E-3

Stainless steel version on request

Series OSP-E25BHD to E50BHD: Type E1
(Mounting from above / below with 2 through holes)

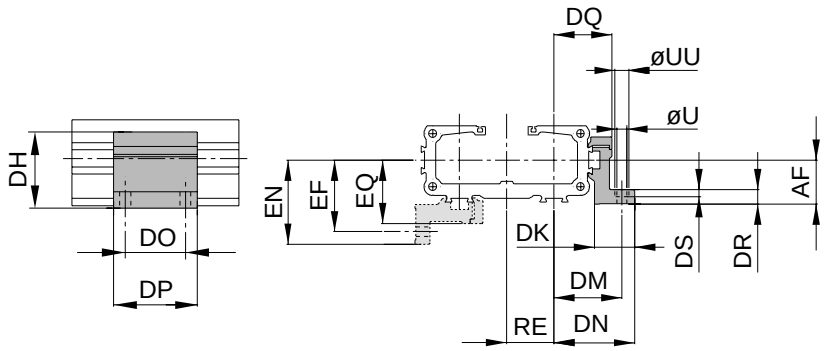

Series OSP-E25BHD to E50BHD: Type D1
(Mountings from below with 2 screws)

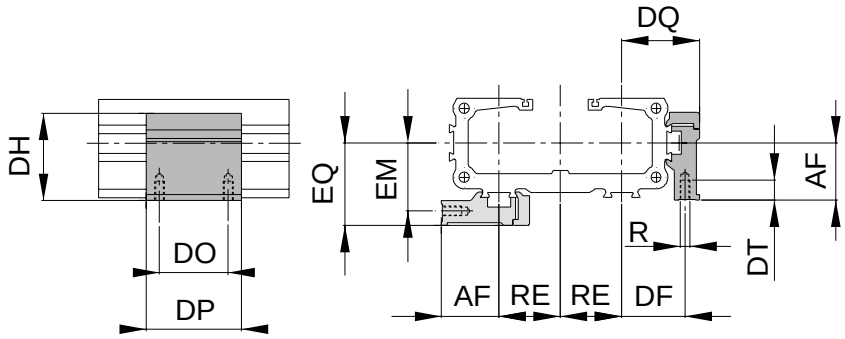

Dimension Table (mm)

Series	R	U	UU	AF	DF	DH	DK	DM	DN	DO	DP	DQ	DR	DS	DT	EF	EM	EN	EQ	RE	Order No. Type E1	Order No. Type D1
OSP-E25	M5	5,5	10	22	27	38	26	40	47,5	36	50	34,5	8	5,7	10	41,5	28,5	49	36	26	**20009**	**20008**
OSP-E32	M5	5,5	10	30	33	46	27	46	54,5	36	50	40,5	10	5,7	10	48,5	35,5	57	43	32	**20158**	**20157**
OSP-E50	M6	7	–	48	40	71	34	59	67	45	60	52	10	–	11	64	45	72	57	44	**20163**	**20162**

Linear Drive Accessories

Mountings for Linear Drives fitted with OSP-guides

OSP
ORIGA SYSTEM PLUS

For Linear Drive
- **Series OSP-E Belt**
- **Series OSP-E Screw ***

Overview

Mounting Type	Type	Type – OSP Guides SLIDELINE PROLINE MULTIBRAKE 25	32	50	POWERSLIDE 25/25	25/35	25/44	32/35	32/44	50/60	50/76
End cap mounting	Type A1										
	Type A2	O	O								
	Type A3				O	O		O			
End cap mounting, reinforced	Type B1	X	X		X	X	X	X	X		
	Type B3										
	Type B4						O		O		
End cap mounting 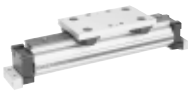	Type C1			X						X	X
	Type C2			O							
	Type C3									O	
	Type C4										O
Mid section support, small	Type D1	X	X	X	X	X	X	X	X	X	X
Mid section support, wide 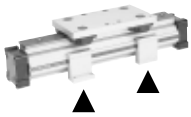	Type E1	X	X	X	X	X	X	X	X	X	X
	Type E2	O	O	O							
	Type E3				O	O		O		O	
	Type E4						O		O		O

X = carriage mounted in top (12 o'clock position)

O = carriage mounted in lateral (3 or 9 o'clock position)

= available components

*** Important:**
With the OSP-E Screw series, end cap mountings type A, B and C can only be used at the opposite end of the drive shaft. Please use mid-supports (data sheet 1.45.024E-3).

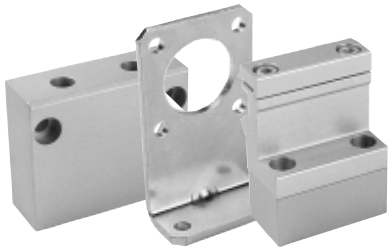

HOERBIGER ORIGA

A1P648E00DZ00X

The right to introduce technical modifications is reserved

End cap mountings *

Four internal screw threads are located in the end faces of all OSP actuators for mounting the drive unit. End cap mountings may be secured across any two adjacent screws.

Material: Series OSP-25, 32: zinc plated steel
Series OSP-50: anodized aluminium

Supplied in pairs.

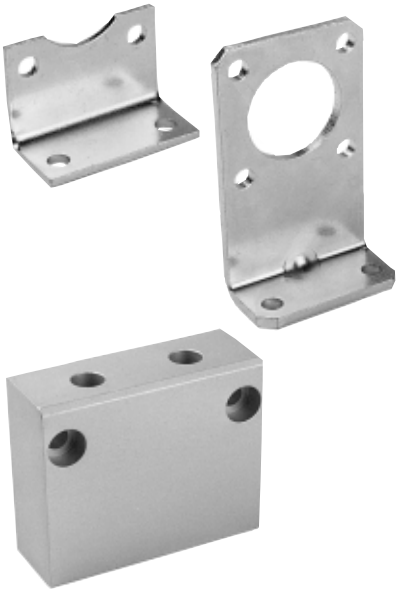

Series OSP – E25, E32: Type A

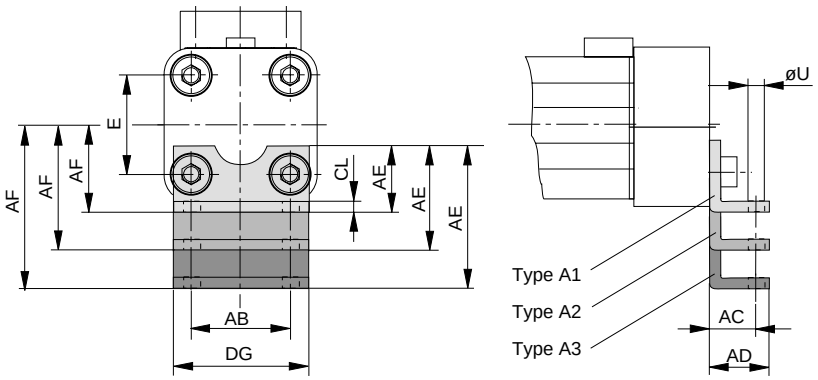

Series OSP – E25, E32: Type B

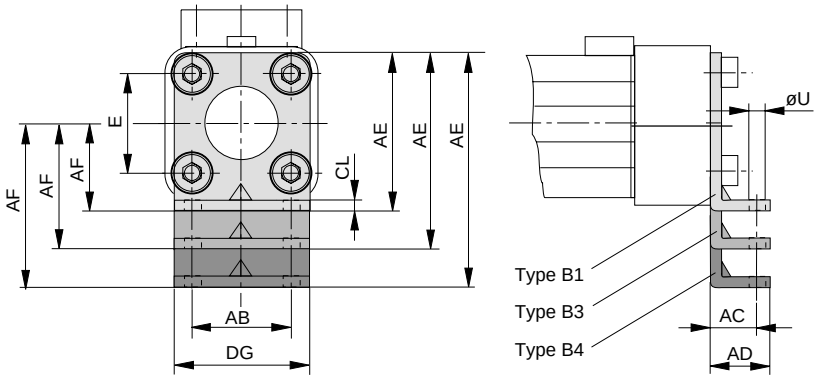

Dimension Table (mm)
– Dimensions AE and AF (Dependant on the mounting type)

Mount type	Dimensions **AE** for size			**AF** for size		
	25	**32**	**50**	**25**	**32**	**50**
A1	18	20	–	22	30	–
A2	33	34	–	37	44	–
A3	45	42	–	49	52	–
B1	42	55	–	22	30	–
B3	–	–	–	–	–	–
B4	80	85	–	60	60	–
C1	–	–	30	–	–	48
C2	–	–	39	–	–	57
C3	–	–	54	–	–	72
C4	–	–	77	–	–	95

Series OSP – E50: Type C

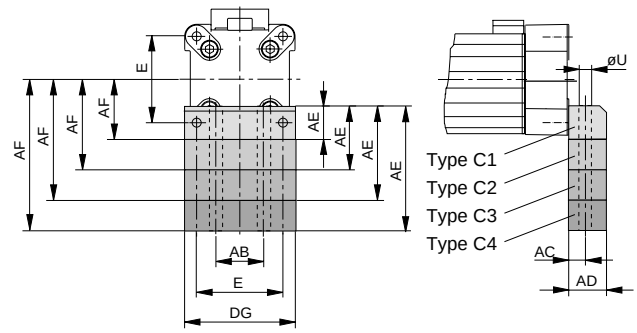

Dimension Table (mm)

Series	E	øU	AB	AC	AD	CL	D
OSP-E25	27	5.8	27	16	22	2.5	39
OSP-E32	36	6.6	36	18	26	3	50
OSP-E50	70	9	40	12.5	24	-	86

* see mounting instructions on page 1.45.024E-1

Series OSP-E25, E32, E50: Type E.
(Mounting from above / below using a cap screw)

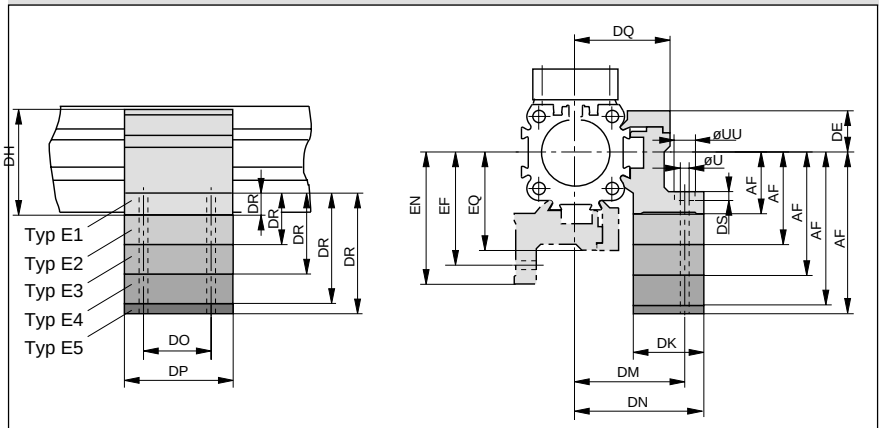

Mid section supports

Information regarding type E1 and D1:

Mounting of the mid section supports is also possible on the lower side of the drive. In this case, please note the new centre line dimensions.

See layout information on data sheet 1.40.021E-2, 1.40.022E-3, 1.40.024E-3,

Stainless steel version on request.

Series OSP-E25, E32, E50: Type D1
(Mounting from below with thread screw)

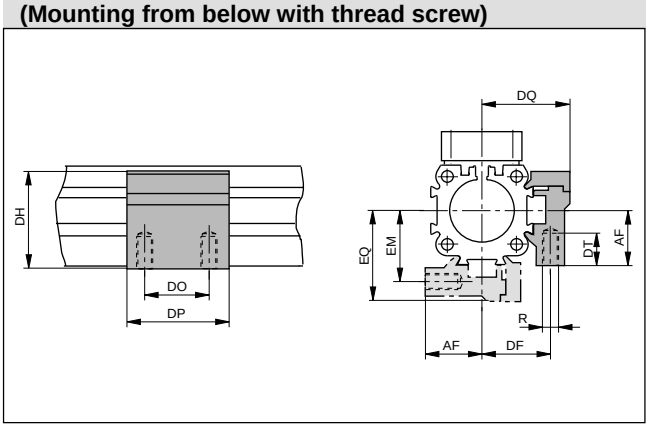

Dimension Table (mm)
– Dimensions DR und AF (Dependant on the mounting type)

Mount. type	Dimensions **DR** for size			**AF** for size		
	25	**32**	**50**	**25**	**32**	**50**
D1	–	–	–	22	30	48
E1	8	10	10	22	30	48
E2	23	24	19	37	44	57
E3	35	32	31	49	52	72
E4	46	40	57	60	60	95

Dimension Table (mm)

Series	R	U	UU	DE	DF	DH	DK	DM	DN	DO	DP	DQ	DS	DT	EF	EM	EN	EQ
OSP-E25	M5	5.5	10	16	27	38	26	40	47.5	36	50	34.5	5.7	10	41.5	28.5	49	36
OSP-E32	M5	5.5	10	16	33	46	27	46	54.5	36	50	40.5	5.7	10	48.5	35.5	57	43
OSP-E50	M6	7	–	23	40	71	34	59	67	45	60	52	–	11	64	45	72	57

Order instruction for mountings Type A – Type B – Type C – Type D – Type E

Mounting type (versions)	**Order No. size**		
	25	**32**	**50**
A1 *)	**2010**	**3010**	**–**
A2 *)	**2040**	**3040**	**–**
A3 *)	**2060**	**3060**	**–**
B1 *)	**20311**	**20313**	**–**
B3 *)	**–**	**–**	**–**
B4 *)	**20312**	**20314**	**–**
C1 *)	**–**	**–**	**5010**
C2 *)	**–**	**–**	**20349**
C3 *)	**–**	**–**	**20350**
C4 *)	**–**	**–**	**20351**
D1	**20008**	**20157**	**20162**
E1	**20009**	**20158**	**20163**
E2	**20352**	**20355**	**20361**
E3	**20353**	**20356**	**20362**
E4	**20354**	**20357**	**20363**

(* pair)

Linear Drive Accessories

Inversion Mounting

Size 25, 32, 50

OSP
ORIGA SYSTEM PLUS

For Linear Drive
- **Series OSP-E Belt**
- **Series OSP-E Screw**

Series OSP-E25, E32

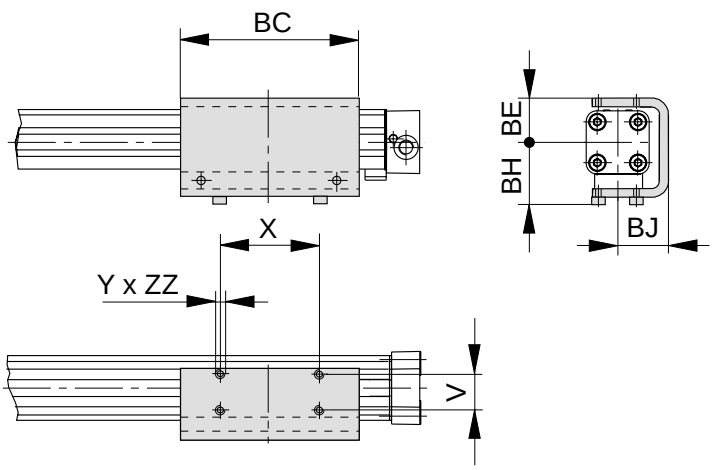

Series OSP-E50

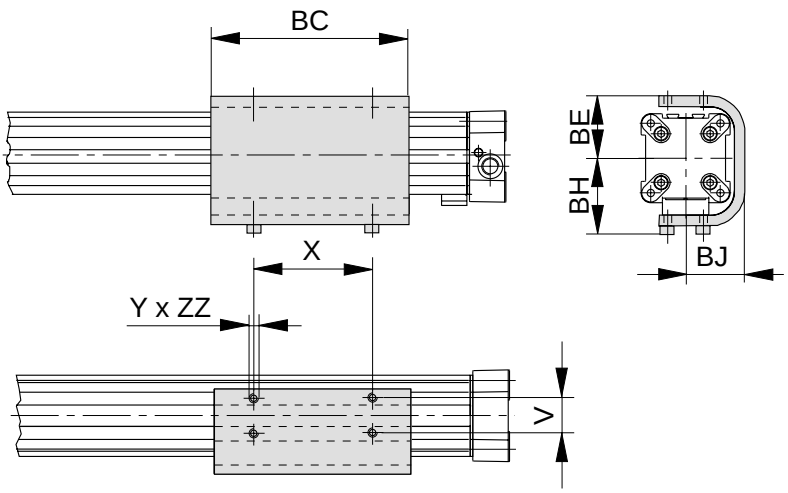

In dirty environments, or where there are special space problems, inversion of the cylinder is recommended. The inversion bracket transfers the driving force to the opposite side of the cylinder. The size and position of the mounting holes are the same as on the standard cylinder.

Stainless steel version on demand.

Please note:
Other components of the OSP system such as **mid-section supports, proximity switches** can still be mounted on the free side of the cylinder.

Important Note:

May be used in combination with Clevis Mounting, ref. data sheet 1.45.021E.

Dimension Table (mm)

Series	V	X	Y	BC	BE	BH	BJ	ZZ	Order No.
OSP-E25	25	65	M5	117	31	43	33.5	6	**20037**
OSP-E32	27	90	M6	150	38	51	39.5	6	**20161**
OSP-E50	27	110	M6	180	55	64	52	8	**20166**

A1P649E00DZ00X

The right to introduce technical modifications is reserved

HOERBIGER ORIGA

Linear Drive Accessories

Adaptor Profile

Size 25, 32, 50

OSP
ORIGA SYSTEM PLUS

For Linear Drive
- **Series OSP-E Belt**
- **Series OSP-E Screw**

Adaptor Profile OSP
- A universal attachment for mounting of additional items
- Solid material

Dimensions Series OSP-E

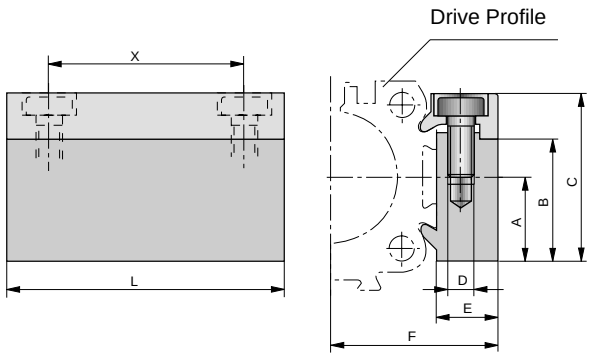

Dimensions Series OSP-E..BHD

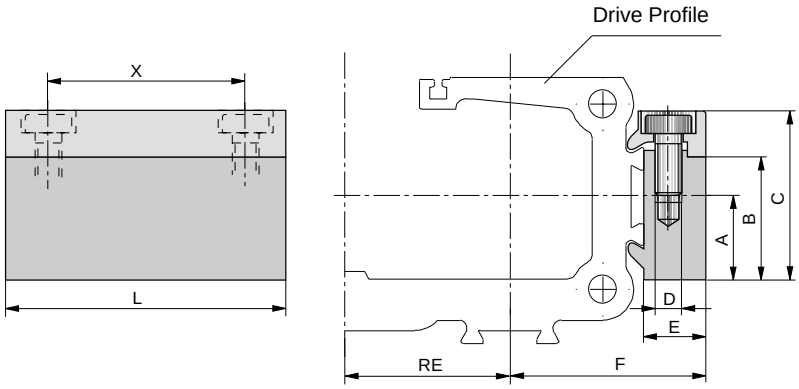

Dimension Table (mm)

Series	A	B	C	D	E	F	L	X	RE	Order No. Standard	Order No. Stainless
OSP-E25	16	23	32	M5	10.5	30.5	50	36	26	**20006**	**20186**
OSP-E32	16	23	32	M5	10.5	36.5	50	36	32	**20006**	**20186**
OSP-E50	20	33	43	M6	14	52	80	65	44	**20025**	**20267**

A1P650E00DZ00X

TThe right to introduce technical modifications is reserved

HOERBIGER ORIGA

Linear Drive Accessories

T-Nut Profile

Size 25, 32, 50

OSP
ORIGA SYSTEM PLUS

For Linear Drive
- **Series OSP-E Belt**
- **Series OSP-E Screw**

T-Nut Profile OSP

- A universal attachment for mounting with standard T-Nuts

Dimensions Series OSP-E

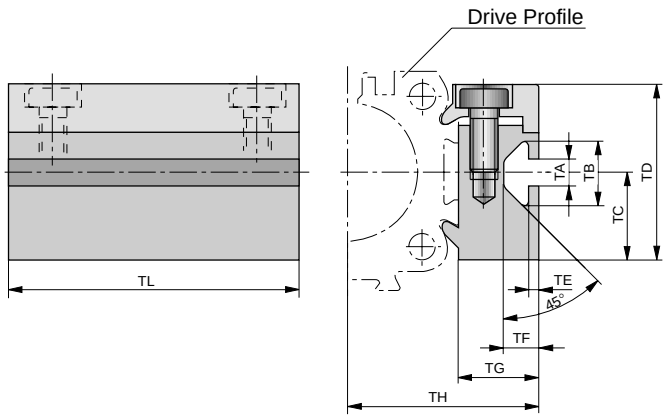

Dimensions Series OSP-E..BHD

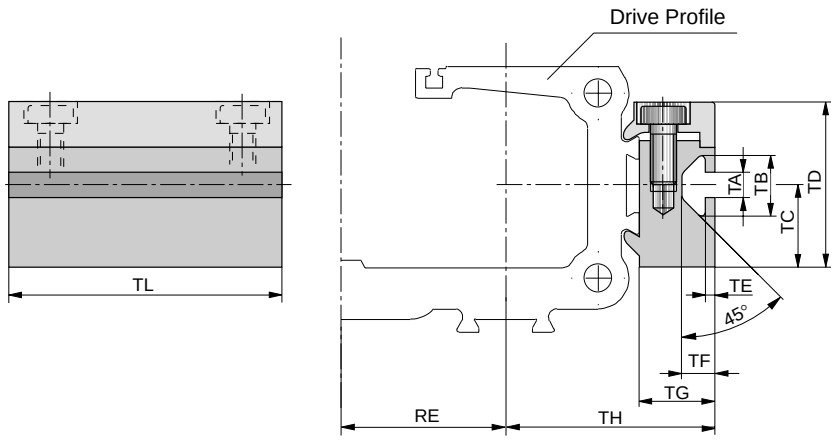

Dimension Table (mm)

Series	RE	TA	TB	TC	TD	TE	TF	TG	TH	TL	Order No. Standard	Order No. Stainless
OSP-E25	26	5	11.5	16	32	1.8	6.4	14.5	34.5	50	**20007**	**20187**
OSP-E32	32	5	11.5	16	32	1.8	6.4	14.5	40.5	50	**20007**	**20187**
OSP-E50	44	8.2	20	20	43	4.5	12.3	20	58	80	**20026**	**20268**

HOERBIGER ORIGA

A1P651E00DZ00X

The right to introduce technical modifications is reserved

Linear Drive Accessories

Motor Mountings Coupling Housing

Size 25, 32, 50

OSP
ORIGA SYSTEM PLUS

- **For Series OSP-E Belt**

The coupling housing is the mounting base for the motor.
Motor flanges and couplings suitable for the available range of servo and stepper motors will be found together with technical data and dimensions on motors and drives, see Catalogue A4P019E.

Dimensions Coupling Housing (for motor)

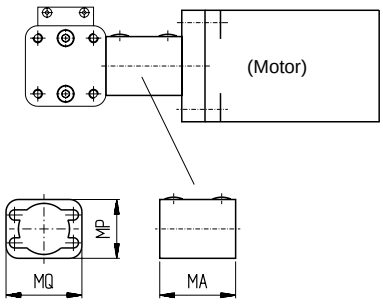

Dimension Table (mm)

Series	Type	MA	MP	MQ	Order No.
OSP-E25	**250**	47	30	40	**20606**
OSP-E32	**320**	49	38	49	**20607**
OSP-E50	**500**	76	54	65	**20608**

For **Linear Drives** see 1.20.002E, 1.25.002E

A1P652E00DZ00X

The right to introduce technical modifications is reserved

HOERBIGER ORIGA

Linear Drive Accessories

Motor Mountings
Coupling Housing

Size 25, 32, 50

OSP
ORIGA SYSTEM PLUS

• For Series OSP-E..BHD

The coupling housing is the mounting base for the gear or for the motor.

Coupling Housing (for motor)

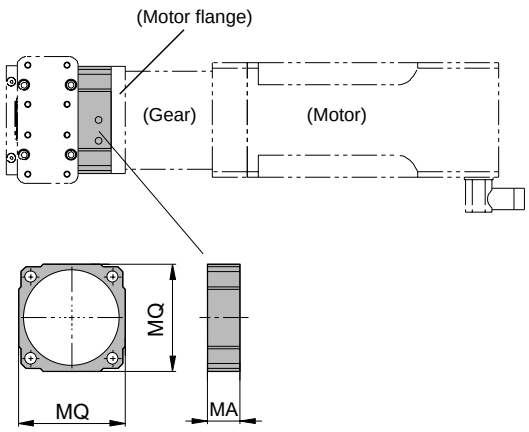

Dimension Table (mm)

Series	MA	MQ	Order No.
OSP-E25BHD	22	76	**12300**
OSP-E32BHD	30	98	**12301**
OSP-E50BHD	41	128	**12302**

Motor Flange
(Semi-finished)

Size 25, 32, 50

• For Series OSP-E..BHD
The semi-finished motor flange match the coupling housing above and has to be machined to fit actual gear or motor type.

Motor flanges suitable for the available range of gears, servo and stepper motors will be found together with technical data and dimensions on gears, motors and drives, see separate catalogues.

Motor Flange (Semi-finished)

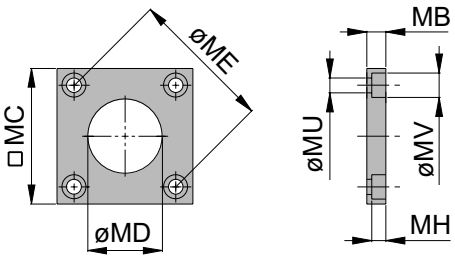

Dimension Table (mm)

Series	MB	MC	MD	ME	MH	MU	MV	Order No.
OSP-E25BHD	14	90	36	82	8.5	9	15	**12308**
OSP-E32BHD	14	100	55	106	10.5	11	18	**12309**
OSP-E50BHD	18	125	77	144	12.5	13.5	20	**12310**

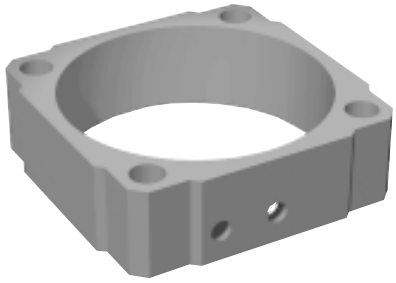

HOERBIGER ORIGA

For **Linear Drives** see 1.15.002E

Linear Drive Accessories

Motor Mountings Coupling Housing

Size 25, 32, 50

OSP
ORIGA SYSTEM PLUS

- **For Series OSP-E Screw**

The coupling housing is the mounting base for the motor.
Motor flanges and couplings suitable for the available range of servo and stepper motors will be found together with technical data and dimensions on motors and drives, see Catalogue A4P019E.

Dimensions Coupling Housing (for motor)

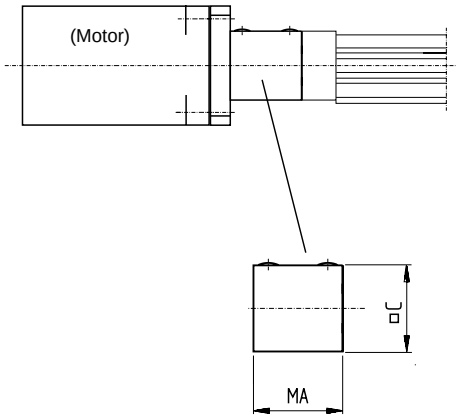

Dimension Table (mm)

Series	Type	MA	C	Order No.
OSP-E25	**251**	38	41	**20137**
OSP-E32	**321**	54	52	**20138**
OSP-E50	**501**	84	87	**20139**

For **Linear Drives** see 1.30.002E, 1.35.002E, 1.35.011E

A1P653D00DZ00X

The right to introduce technical modifications is reserved

HOERBIGER ORIGA

Linear Drive Accessories

Piston Rod Elements

Size 25, 32, 50

OSP
ORIGA SYSTEM PLUS

- **Piston Rod Clevis according to ISO 8140**
- **Piston Rod Eye according to ISO 8139**
- **Piston Rod Compensating Coupling**

For Series OSP-E..SR (Linear Drive with Trapezoidal Screw and Extending Rod)

Piston Rod Clevis according to ISO 8140 (CETOP RP102P) Type: GK-..

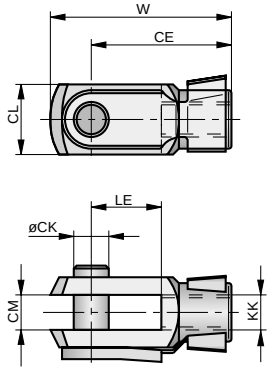

Order Instructions, Dimension Table (mm), Weigth

Series	Type	øCK	CE	CL	CM	KK	LE	W	Mass(kg)	Order No.
OSP-E25SR	GK-M10x1.25	10	40	20	10	M10x1.25	20	52	0.08	KY6135
OSP-E32SR	GK-M10x1.25	10	40	20	10	M10x1.25	20	52	0.08	KY6135
OSP-E50SR	GK-M16x1.5	16	64	32	16	M16x1.5	32	83	0.30	KY6139

Piston Rod Eye according to ISO 8139 (CETOP RP103 P) Type: GA-..

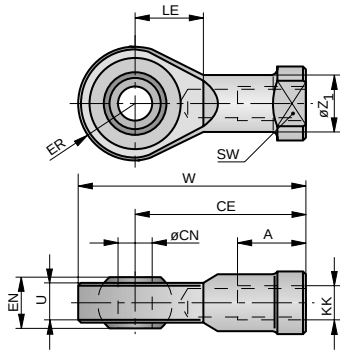

Order Instructions, Dimension Table (mm), Weigth

Series	Type	A	CE	øCN	EN	ER	KK	LE	SW	U	W	$øZ_1$	Mass. (kg)	Order No.
OSP-E25SR	GA-M10 x 1.25	20	43	10	14	14	M10x1.25	15	17	10.5	57	15	0.072	KY 6147
OSP-E32SR	GA-M10 x 1.25	20	43	10	14	14	M10x1.25	15	17	10.5	57	15	0.072	KY 6147
OSP-E50SR	GA-M16 x 1.5	28	64	16	21	21	M16x1.5	22	22	15	85	22	0.21	KY 6150

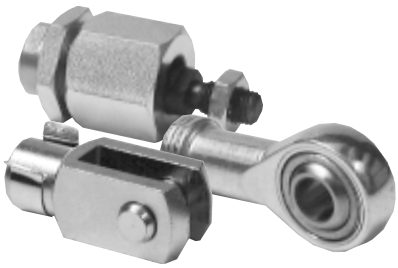

HOERBIGER ORIGA

A1P672E00AAC00X

The right to introduce technical modifications is reserved

Piston Rod Compensating Coupling
Type: AK-..

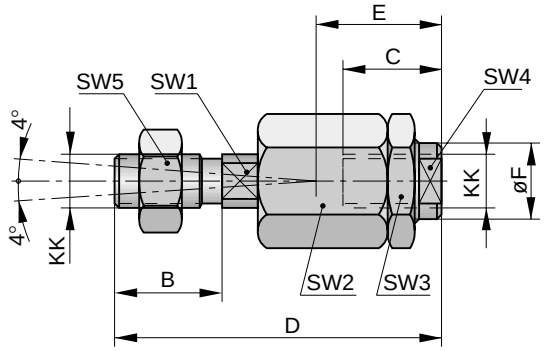

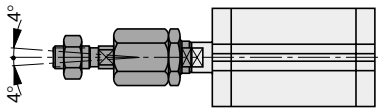

Angular compensation

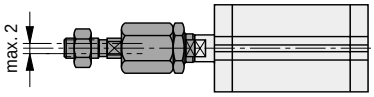

Radial compensation of
the centre axis

Order Instructions, Dimension Table (mm), Weigth

Series	Type	B	C	D	E	ØF	KK	SW1	SW2	SW3	SW4	SW5	Mass (kg)	Order No.
OSP-E25SR	**AK-M 10x1.25**	20	23	70	31	21.5	M10x1.25	12	30	30	19	17	0.218	**KY 1129**
OSP-E32SR	**AK-M 10x1.25**	20	23	70	31	21.5	M10x1.25	12	30	30	19	17	0.218	**KY 1129**
OSP-E50SR	**AK -M16x1.5**	40	32	112	45	33.5	M16x1.5	19	41	41	30	30	0.637	**KY 1133**

Aluminium Roller Guides

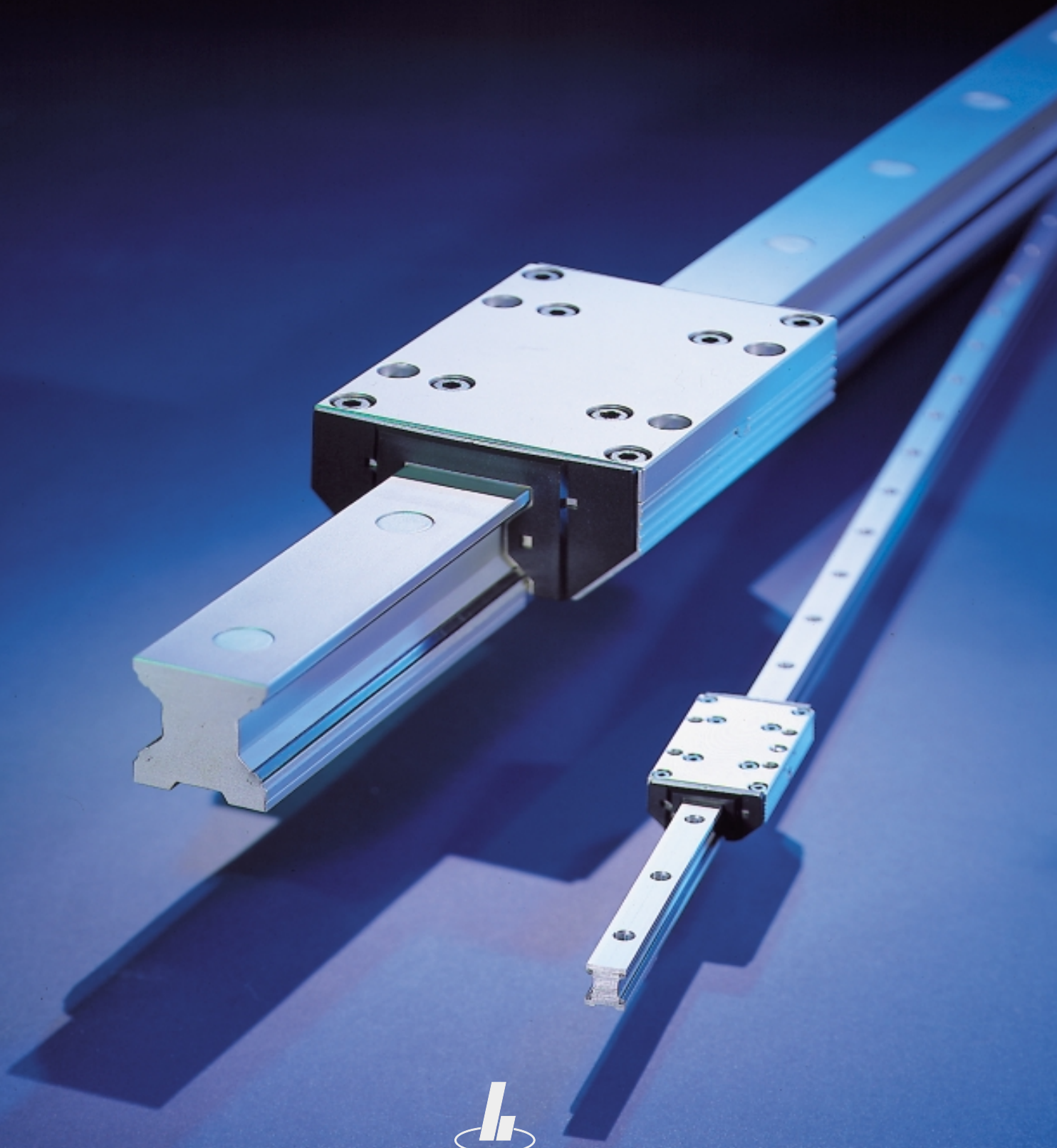

HOERBIGER
ORIGA

Aluminium-Rollenführungen

The characteristics of HOERBIGER-ORIGA aluminium roller guides are very high performance and low weight. They are quiet and precise in operation.

Application

Aluminium roller guides provide smooth operation and high load carrying capacity for industrial automation.

By the use of lightweight aluminium components the moving masses are minimised, travel speeds are increased and actuation energy is saved.

Their smooth action and speeds up to 10 m/s make them ideal for widespread use in many areas of application.

Product

- Light weight (aluminium)
- Smooth operation
- Speeds up to 10 m/s
- Loading from any direction
- Virtually grease-free guidance system
- Flexible mounting dimensions
- High load capability

Designs

- Double rail
- Single rail

available in a standard version, a rustproof version and a LOW COST version

Technical data

- Sizes 12, 15, 20, 25, 35 and 45
- Rail lengths 300 mm to 4000 mm (other lengths on request). For longer travel the guide rails can be joined together.

See technical section for further technical details.

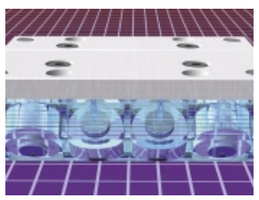

Rollers of standard roller cassette

A CAD library in DXF format is available free of charge

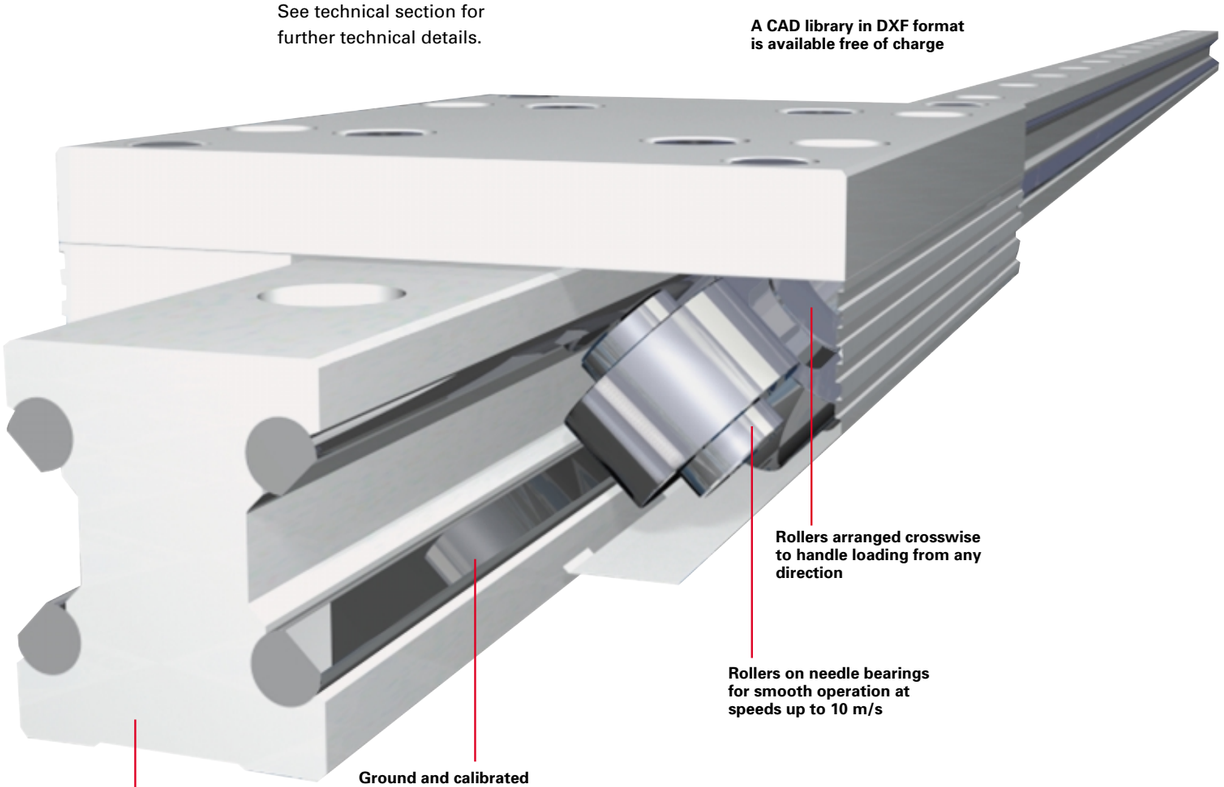

Application examples

**Aluminium roller guides in a cutting machine for spectacle lenses. Both the work piece carriers and the motorised X - Y table axis are equipped with roller guides.
The smooth operation and precision of the equipment ensures a fine cutting action.
(Kasch company photo)**

**Aluminium roller guides in an automatic vibrator for flattening printed sheets of paper.
To guarantee even pressure on the sheets of paper, the roller bridge is supported by precision roller guides.
(Baumann company photo)**

**Handling units for medical equipment. Smooth, easy movement with guideline roller guide.
(Dräger company photo)**

**Aluminium roller guides in the sliding carriage of a machine for producing cables. The projecting arm of the carriage is guided by two double rails each with two roller cassettes and can be moved manually with minimal force because of the low friction properties.
(Kabelmat company photo)**

**Single rail and roller shoe versions of the aluminium roller guide in a handling arrangement for stacks of paper. Various fittings and limit stops for stacking are moved on two axes horizontally and vertically.
The robustness and reliability of the roller guides allows for continous operation under high load conditions.
(Solms company photo)**

Characteristics for Double Rail GDL-FD and Single Rail GDL-FE

Characteristics

Characteristic	Unit	Description
Sealing		The roller shoe and cassettes are fitted with felt wiper rings, in a clip-on housing. See page 8 for spare wipers
Mounting		Rails and roller shoes with screw-quality 8.8, washer to DIN 433
Loads		See load data in the table. We are happy to calculate loads and service life for you on request
Acceleration, Decelleration	m/s^2	max. 40
Installation		In any position
Adjustment		The roller shoes can be adjusted/readjusted by the customer
Lengths		L = 300 mm to 4000 mm, (in double rail standard version sizes 25 and 35 also in 6000 mm) – For the stainless steel version size 15 L 300 mm to 3000 mm – Other lengths on request – For longer travel the guide rails can be joined together
Lubrication		Lifetime lubrication with roller bearing grease
Speed	m/s	up to 10
Materials – Standard version		Rails: Aluminium Tracks: High alloy spring steel Roller cassettes: Aluminium Rollers: Roller bearing steel
Materials – Stainless steel version		Rails: Aluminium Tracks: Stainless spring steel Roller cassettes: Aluminium Rollers: Stainless roller bearing steel
Operating temperature	°C	-10 to +80

Double Rails GDL-FD and Roller Cassettes RK-FD

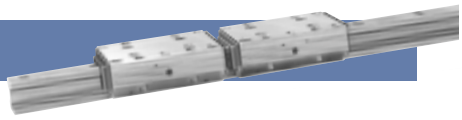

Loads, Moments and Weights

*) Recommended safety factors: Condition – Screw 8.8
Compression load – S>1.3
Tensile load – S>4.0
Torque load – S>6.0

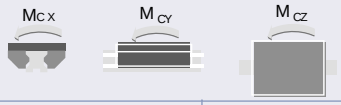

Size	Version	Load C [N]	Co [N]	M_Y / M_Z [Nm] * stat.	dyn.	M_X [Nm] * stat.	dyn.	Weight (Mass) [kg] Cassette	Double rail / m
12	Standard	3700	4000	57	53	37	34	0.1	0.4
	Stainless	–	–	–	–	–	–	–	–
15	Standard	5900	7200	124	101	78	64	0.3	0.8
	Stainless	1770	2160	37	30	23	19	0.3	0.8
20	Standard	6700	8500	174	137	118	93	0.4	0.9
	Stainless	2010	2550	52	41	35	28	0.4	0.9
25	Standard	11300	15800	349	249	249	178	0.6	1.8
	Stainless	3390	4740	105	75	75	53	0.6	1.8
35	Standard	18700	24600	763	579	578	438	1.5	3.2
	Stainless	5610	7380	229	174	173	131	1.5	3.2
45	Standard	43800	54900	2085	1666	1754	1401	2.9	5.5
	Stainless	13140	16470	626	500	526	420	2.9	5.5
12	Low Cost	620	170	2.4	8.9	1.6	5.7	0.1	0.4
15	Low Cost	700	230	4	12	2.5	7.5	0.3	0.8
20	Low Cost	940	300	6	19	4	13	0.4	0.9
25	Low Cost	1500	700	15	32	11	23	0.6	1.8
35	Low Cost	3100	1400	42	95	32	72	1.5	3.2
45	Low Cost	6300	2700	103	238	86	200	2.9	5.5

Double Rails GDL-FD and Roller Cassettes RK-FD

Dimensions (mm)

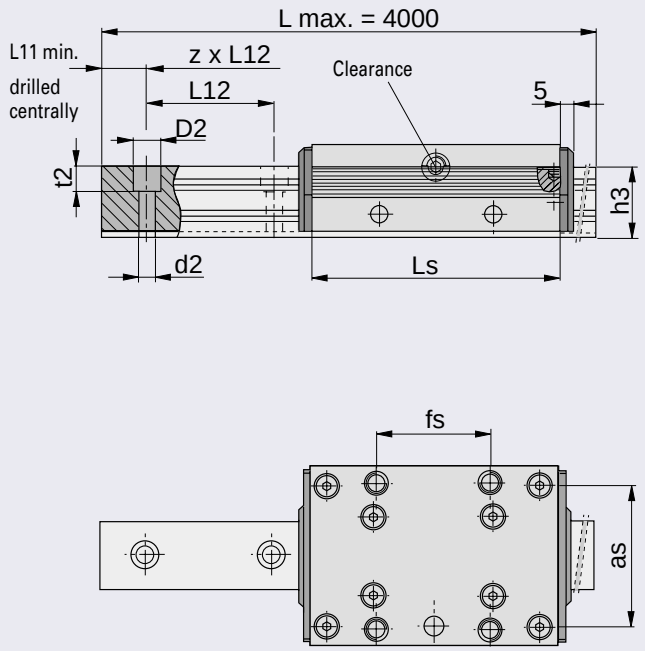

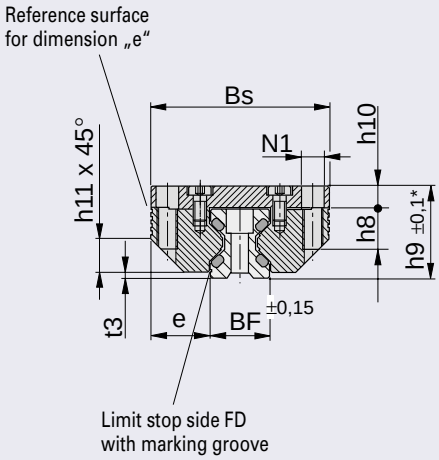

*in Low Cost version h9$^{\pm 0,2}$

Dimension Table (mm)

Size	Ls	BF	Bs	h3	h9	as	fs	d2	D2	e	h8	h10	h11	L11	L12	t2	t3	N1
12	64	12	37	14.7	19	30	25	3.4	6	12.50	8	4.0	6	min.10	40	5.5	1.4	M4
15	78	15.5	47	18.7	24	38	30	4.5	8	15.75	10	5.0	8	min.10	60	6	2.0	M5
20	92	21.0	63	22.6	30	53	40	5.5	10	21.00	12	7.0	11	min.10	60	7	2.0	M6
25	98	23.0	70	27.0	36	57	45	6.6	11	23.50	16	8.5	13	min.10	60	10	2.5	M8
35	135	32.0	100	37.0	48	82	62	9.0	15	34.00	20	10.5	20	min.12	80	11.5	3.5	M10
45	165	45.0	120	46.0	60	100	80	11.0	18	37.50	24	13.5	22	min.16	105	14.5	4.0	M12

Order Instructions

Size	Version	Order-No.	
		Double rail GDL-FD	**Cassette RK-FD**
12	Standard	**20929**	**20931**
	Stainless	**–**	**–**
15	Standard	**20506**	**20518**
	Stainless	**20897**	**20882**
20	Standard	**20507**	**20519**
	Stainless	**20898**	**20883**
25	Standard	**20508**	**20520**
	Stainless	**20899**	**20884**
35	Standard	**20829**	**20837**
	Stainless	**20900**	**20885**
45	Standard	**20830**	**20838**
	Stainless	**20901**	**20886**
12	Low Cost	**–**	**20993**
15	Low Cost	**–**	**20521**
20	Low Cost	**–**	**20522**
25	Low Cost	**–**	**20523**
35	Low Cost	**–**	**20839**
45	Low Cost	**–**	**20840**

Pair of Single Rail GDL-FE and Pair of Roller Shoes RS-FE

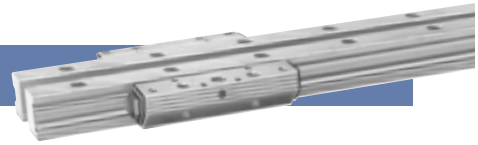

Loads, Moments and Weights

*) Recommended safety factors: Condition – Screw 8.8
Compression load – S>1.3
Tensile load – S>4.0
Torque load – S>6.0

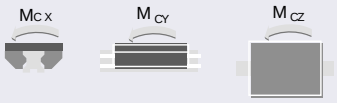

Size	Version	Load C [N]	Co [N]	M_Y / M_Z [Nm] * stat.	dyn.	M_X [Nm] * stat.	dyn.	Weight (Mass) [kg] Pair Roller-shoes	Single Rail pair / m
12	Standard	3700	4000	57	53	2.0 (B+30.3)	1.9 (B+30.3)	0.06	0.8
	Stainless	–	–	–	–	–	–	–	–
15	Standard	5900	7200	124	101	3.6 (B+36.5)	3.0 (B+36.5)	0.2	1.6
	Stainless	1770	2160	37	30	1.1 (B+36.5)	0.9 (B+36.5)	0.2	1.6
20	Standard	6700	8500	174	137	4.2 (B+47)	3.3 (B+47)	0.3	2.0
	Stainless	2010	2550	52	41	1.3 (B+47)	1.0 (B+47)	0.3	2.0
25	Standard	11300	15800	349	249	7.9 (B+58.4)	5.7 (B+58.4)	0.5	3.8
	Stainless	3390	4740	105	75	2.4 (B+58.4)	1.7 (B+58.4)	0.5	3.8
35	Standard	18700	24600	763	579	12.3 (B+85)	9.3 (B+85)	1.4	7.0
	Stainless	5610	7380	229	174	3.7 (B+85)	2.8 (B+85)	1.4	7.0
45	Standard	43800	54900	2085	1666	27.4 (B+109)	21.9 (B+109)	2.8	11.2
	Stainless	13140	16470	626	500	8.2 (B+109)	6.6 (B+109)	2.8	11.2
12	Low Cost	620	170	2.4	8.9	0.08 (B+30.3)	0.3 (B+30.3)	0.06	0.8
15	Low Cost	700	230	4	12	0.1 (B+36.5)	0.35 (B+36.5)	0.2	1.6
20	Low Cost	940	300	6	19	0.15 (B+47)	0.5 (B+47)	0.3	2.0
25	Low Cost	1500	700	15	32	0.35 (B+58.4)	0.7 (B+58.4)	0.5	3.8
35	Low Cost	3100	1400	42	95	0.7 (B+85)	1.5 (B+85)	1.4	7.0
45	Low Cost	6300	2700	103	238	1.4 (B+109)	3.1 (B+109)	2.8	11.2

Dimensions (mm)

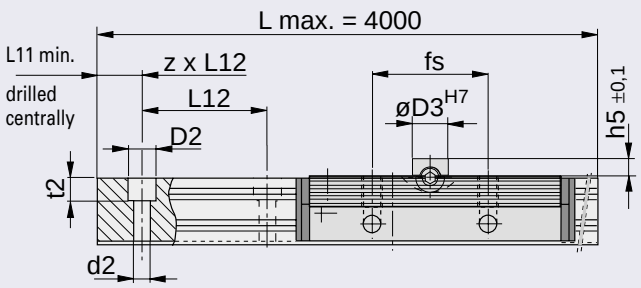

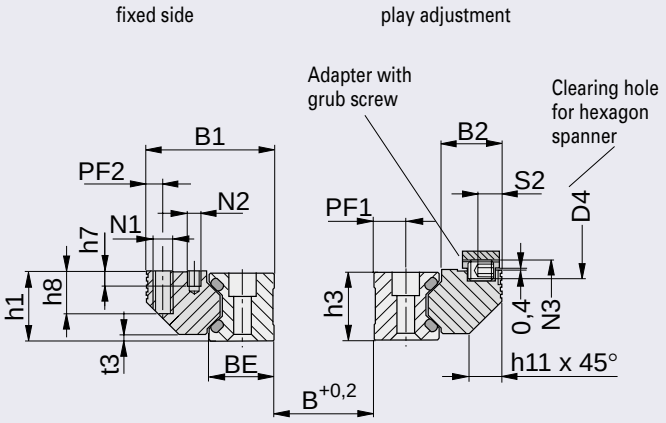

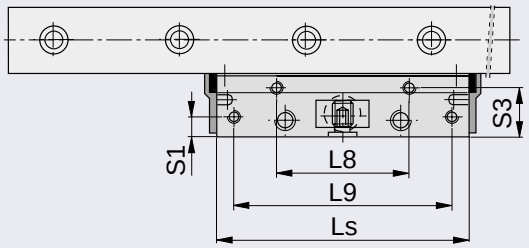

Pair of Single Rail GDL-FE and Pair of Roller Shoes RS-FE

Dimension Table (mm)

Size	Ls	BE	B1	B2	d2	D2	$D3^{H7}$	D4	fs	h1	h3	h5	h7	h8
12	64	12.00	24.5	11.9	3.4	6	8	3	25	15.0	14.7	4	6.0	8
15	78	15.25	30.9	15.2	4.5	8	10	4	30	19.0	18.7	5	7.5	10
20	92	20.00	40.9	20.4	5.5	10	10	4	40	23.0	22.6	5	8.0	12
25	98	25.00	48.4	22.9	6.6	11	14	6	45	27.5	27.0	7	5.0	16
35	135	35.00	68.9	32.9	9.0	15	14	6	62	37.5	37.0	7	7.5	20
45	165	45.00	82.4	36.4	11.0	18	14	6	80	46.5	46.0	7	9.5	24

Size	h11	L8	L9	L11	L12	t2	t3	N1	N2	N3	PF1	PF2	S1	S2	S3
12	6	29	57	min.10	40	5.5	1.4	M4	M3	M4	5.5	3.4	3.4	4.9	9.7
15	8	34	68	min.10	60	6	2.0	M5	M4	M6	7.0	4.4	4.9	5.9	12.4
20	11	42	80	min.10	60	7	2.0	M6	M5	M6	9.5	4.9	5.9	5.9	16.9
25	13	48	84	min.10	60	10	2.5	M8	M5	M8	12.0	6.4	7.4	8.9	19.4
35	20	67	117	min.12	80	11.5	3.5	M10	M6	M8	17.0	8.9	8.9	8.9	28.4
45	22	83	146	min.16	105	14.5	4.0	M12	M8	M8	22.0	9.9	9.9	8.9	30.9

Order Instructions

Size	Version	**Order No.**	
		Pair of Single Rails GDL-FE	**Pair of Roller Shoes RS-FE**
12	Standard	**20928**	**20930**
	Stainless	**–**	**–**
15	Standard	**20500**	**20512**
	Stainless	**20892**	**20877**
20	Standard	**20501**	**20513**
	Stainless	**20893**	**20878**
25	Standard	**20502**	**20514**
	Stainless	**20894**	**20879**
35	Standard	**20825**	**20833**
	Stainless	**20895**	**20880**
45	Standard	**20826**	**20834**
	Stainless	**20896**	**20881**
12	Low Cost	**–**	**20995**
15	Low Cost	**–**	**20515**
20	Low Cost	**–**	**20516**
25	Low Cost	**–**	**20517**
35	Low Cost	**–**	**20835**
45	Low Cost	**–**	**20836**

Standard Version with Wiper

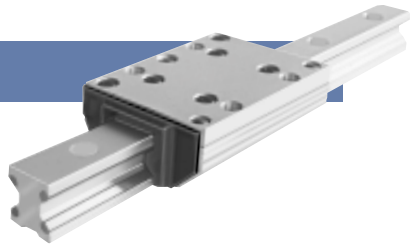

Standard Version with wiper

Integrated into an additional cover, the felt wiper is impregnated with oil. Depending on the degree of contamination, these wipers last for some 6000 km, after which the felt wipers can either be washed or replaced.
For optimal functionality, all holes in the guide rails should be filled with the plastic plugs.

Order Instructions Wiper-Spares

for size	**for version – Standard – Low Cost – Stainless**
12	**20996**
15	**20813**
20	**20814**
25	**20815**
35	**20816**
45	**20817**

Delivery information:

- Scope of supply – 1 pair
- with your order, please indicate whether a bonded, screwed or clipped version is required

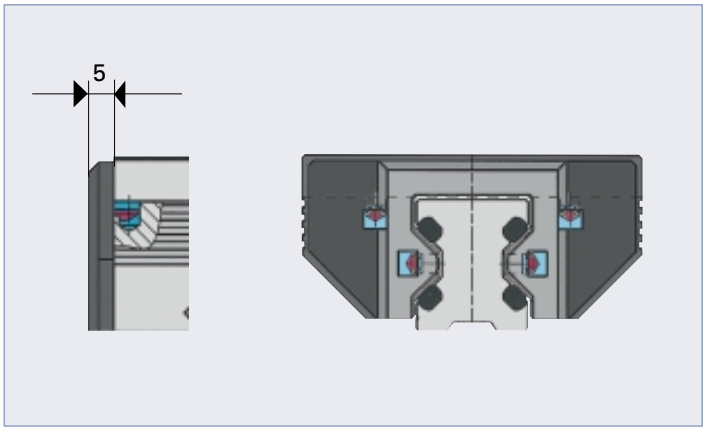

Version with Position Lock

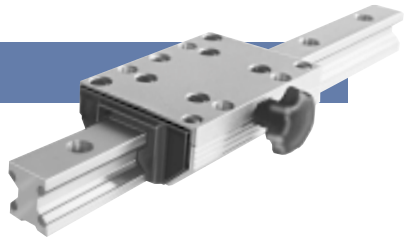

Version with Position Lock

This version features a rotating knob, which locks the carriage into position at any desired point of the track.
The mechanism does not exert any force on the guide system.
The position lock is used in applications where the carriage is moved manually, clamping applications and tooling stations.

On request:
The position lock is also available with a lever.

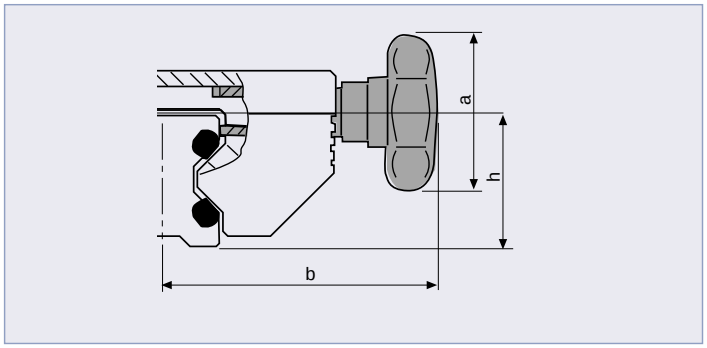

Dimensions (mm),
Order Instructions for cassettes with Position Lock

for size	Dimension (mm) øa	b	h	Holding torque (N)		**Order No.**
12	–	–	–	–	by normally holding torque	**–**
15	25	41	19.0	200		**20923**
20	25	49	23.0	250		**20924**
25	32	56	28.0	250		**20925**
35	50	83	38.5	350		**20926**
45	63	101	48.0	750		**20927**

Cap Plugs

Cap Plugs

Material:
wear-free plastic, oil- and ageing resistant

Installation:
- place cap plug in screw recesses.
- position plastic plate on top and drive caps in evenly.
- remove any protruding burr.

Ordering information:
When ordering single or double rails, the required number of caps will be included in the scope of supply.

Dimensions (mm),
Order Instructions for Cap Plugs

for size	Dimension (mm) cyl. Scr. DIN 912	øD	**Order No.**
12	M3	6	**20997**
15	M4	8	**20524**
20	M5	10	**20525**
25	M6	11	**20526**
35	M8	15	**20841**
45	M10	18	**20842**

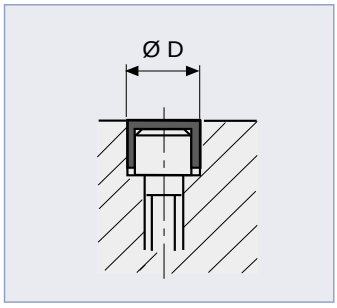

Limit Stop Screw

Limit Stop Screw

The sole purpose of the limit stop screws is to prevent removal of the cassette. They are screwed in to the thread (option) of the guide rails, a rubber cap placed on top dampens the stop in each case but is unable to absorb the energy produced (resulting damage to the plastic wiper can occur).

For rail lengths where the initial mounting distance of the limit stop screw is less the L11min, the drill pattern will move up one half of the standard bore length.

Material:
Chlorbutadien Rubber (Cr), black

Dimension (mm),
Order Instructions for Limit Stop Screws

for size	Dimension(mm) d	D	K	L11 min.	P	**Order No. Standard**	**Stainless**
12	M5	12	8	15	6	**20998**	**20999**
15	M5	12	8	16	6	**20527**	**20902**
20	M5	12	8	17	6	**20527**	**20902**
25	M6	15	10	20.5	7.5	**20528**	**20903**
35	M8	19	13	26.5	9.5	**20529**	**20904**
45	M10	24	16	33	12	**20844**	**20905**

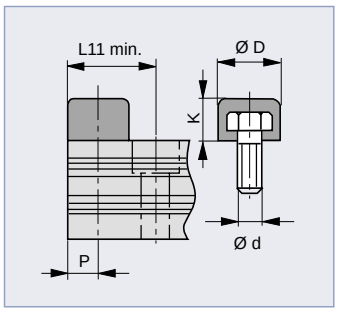

General information

1. Features of the guide system

Aluminium roller guides consist of double rail and roller cassettes resp. individual rail and roller shoe.

Their special features are: light weight, small dimensions, and high speed of displacement. Aluminium roller guides are economical and universal handling components, which are corrosion-resistant and cost effective.

With aluminium roller guides the guide rails and cassettes are made of aluminium. The rollers are running in an antifrictional way on ground or drawn raceways from high alloy spring steel. The special O-arrangement of the running rollers guarantees high load capacity from whatever direction.

2. Size of the guide system

To select the right size, first the moments and forces acting on the bearing have to be determined.

Recommended safety (with screws quality 8.8):

Thrust load:	S > 1.3
Tensile load:	S > 4.0
Moment load:	S > 6.0

Generally the first decision has to be whether the guide system should be built with double rails and cassettes, or whether individual rails with roller shoes, are to be used. Hereby there are a number of variants.

3. Material

The basic body of HOERBIGER-ORIGA aluminium roller guides is made of aluminium. The races consist of tough, high alloy spring or of non-corrosive steel.

By using an aluminium construction the moving mass is reduced, enabling light weight construction with low moving forces and reduced energy consumption.
Nevertheless the integrated HOERBIGER-ORIGA system sustains high load rating and moment loads.

4. Operating temperature

HOERBIGER-ORIGA bearing elements can be operated within a temperature range from -10° up to +80°C.

For other temperatures please consult us.

5. Screwed connections

The units are fixed to the mating structure by the bore holes in the rails and the guides. Hereby the screw quality should be 8.8, washers DIN 433.
To secure the screwed connections we recommend you to use suitable locking means.

Tightening moments

Quality 8.8	Weight	Mom. [Nm]
	M3	1.1
	M4	2.5
	M5	5.0
	M6	8.5
	M8	21.0
	M10	41.0
	M12	71.0

6. Wipers

The races of aluminium roller guides and linear guides are equipped with wipers against coarse environmental contamination. For rail recess covers see page 9.

7. Slide resistance, adjustment

7.1 Double rail and cassette

Aluminium roller guides are adjusted in such a way that the required stiffness under load is obtained. We recommend that you measure the slide resistance as shown below. However, before doing so the mating structure should be checked for dimensional accuracy and flatness.

The cassettes which are mounted on the rails are adjusted clearance- free ex works. This adjusting mode refers to the point on the rail where the cassette moves most smoothly. Adjustment is effected in the non-loaded condition. The indications on the table are referred to this condition.

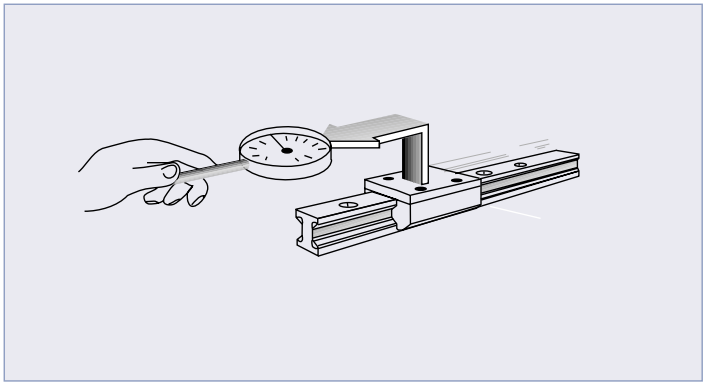

Settings for the standard and rustproof versions

Description	Slide resistance [N]					
Size	12	15	20	25	35	45
Adjust. value	0.5	1.0	1.5	2.0	3.0	3.5
Max. value	2.0	3.0	4.5	6.0	9.0	10.5

Settings for the LOW COST version

Description	Slide resistance[N]					
Size	12	15	20	25	35	45
Adjust. value	0.2	0.5	1.0	1.5	2.0	2.5
Max. value	0.5	1.0	2.0	3.0	4.0	5.0

Tolerances in the guide system and internal friction may cause an increase of the slide resistance when the adjusted cassette is moved along the stroke path.

All values without wipers

7.2 Double rail and roller cassette

For clearance setting first the screws of the cassette plate are slightly released, afterwards the threaded pin which is integrated in the logitudinal side of the cassette is set. Turning the threaded pin effects a displacement of the roller shoe in relation to the cassette plate.

After tightening of the cassette plate the slide resistance can be checked. Afterwards the mating structure is fixed.

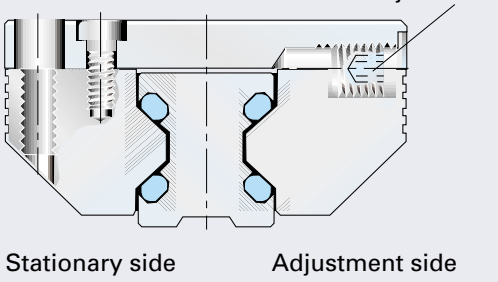

7.3 Single rail and roller shoes

When adjusting the assembly, first indentify the stationary and the adjustable roller shoes.
(see drawing 10.2)
The roller shoes of the stationary side are aligned to the mating structure and fastened by all screws.

With the roller shoes of the stationary side, all fastening screws are slightly tightened. Clearance setting is effected in the same way as with the cassette.

Principally clearance setting is effected in unloaded condition.

7.4 Centering groove on the stationary side

The roller shoes are provided with centering grooves for better alignment during mounting.To use these, centering shoulders according to the data given below, are required.

Size	Mass (mm) a	b
12	4.5	9.6
15	5.0	12.6
20	7.5	16.1
25	10.5	17.6
35	12.5	26.1
45	15.5	31.1

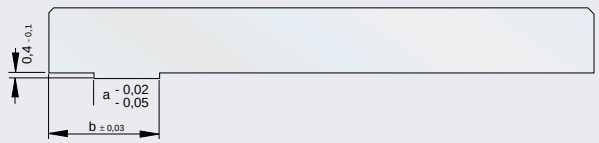

Costumer plate

8. Running accuracy

The running accuracy is measured from the screw-on-surface of the cassette to the ideal straight line of stroke. It is 0.06 mm.

9. Contact and support surfaces

The contact and support surfaces exert a substantial influence on the function and precision of linear guides. Depending on the functional requirements of the system the mating structure must be machined with the corresponding degree of precision.

Machining errors on the mating structure are added to the running errors of the guide system. In order to guarantee troublefree operation we recommend to a max. accumulated deviation of < 0.1 mm per running meter of the guide distance on the mating structure.

General information

10. Design hints

10.1 Double rail and cassette

With the double track arrangement, precise alignment in terms of parallelism and height is necessary.

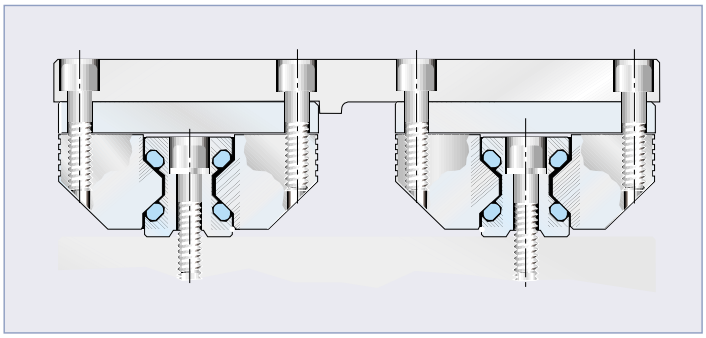

10.2 Single rail and roller shoes

Aluminium roller guides consisting of single rails and roller shoes can be varied in the guide width. They are particularly suitable for assembly on profiled aluminium carriers, as their corrosion and temperature behaviour is homogenous.

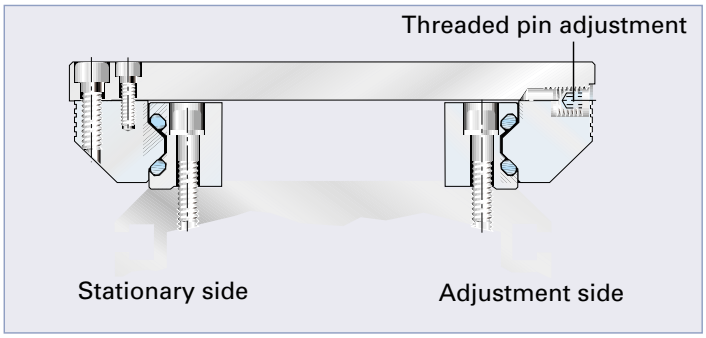

Mounting instructions

11. Mounting instructions

The usable load capacity is influenced by the connection between the guide elements and the mating structure.

11.1 Double rails and cassettes

Depending on the load situation double rails should either be screwed or screwed and dowelled, and placed in grooves or against a shoulder.
The rails rest against shoulders and are screwed or screwed and dowelled to the mating structure.

After final checking of the linearity resp. parallelism the screws are tightened alternately from the center outwards to the given torque.
Afterwards, the cassette should be moved over the total stroke distance, if the motion is uniform then the mounting process may be continued

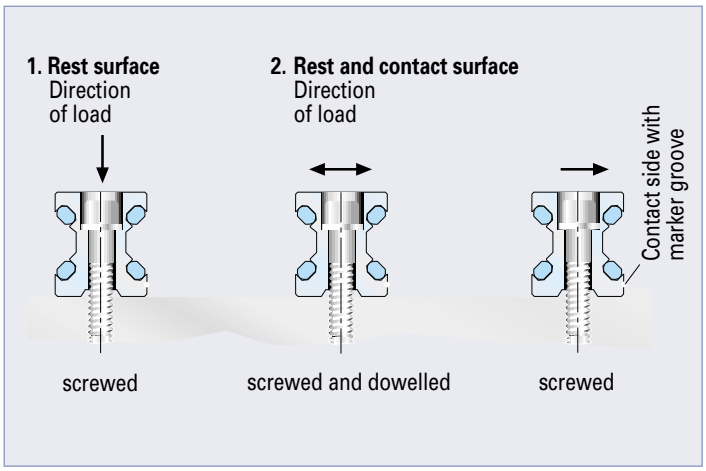

Mounting instructions

11.2 Stationary and movable rest side

With multitrack arrangement first define the a stationary and movable side of the guide. This way tolerances in parallelism can be best compensated.

With multitrack arrangements the movable side of the bearing is equipped with driver and locking device. The floating slider plate has a stationary and a movable side.

The stationary sideprovides the guiding function, the movable side compensates tolerances in parallelism and height.

We recommend that the drive be placed at the guiding side ase this side sustains the driving torque.

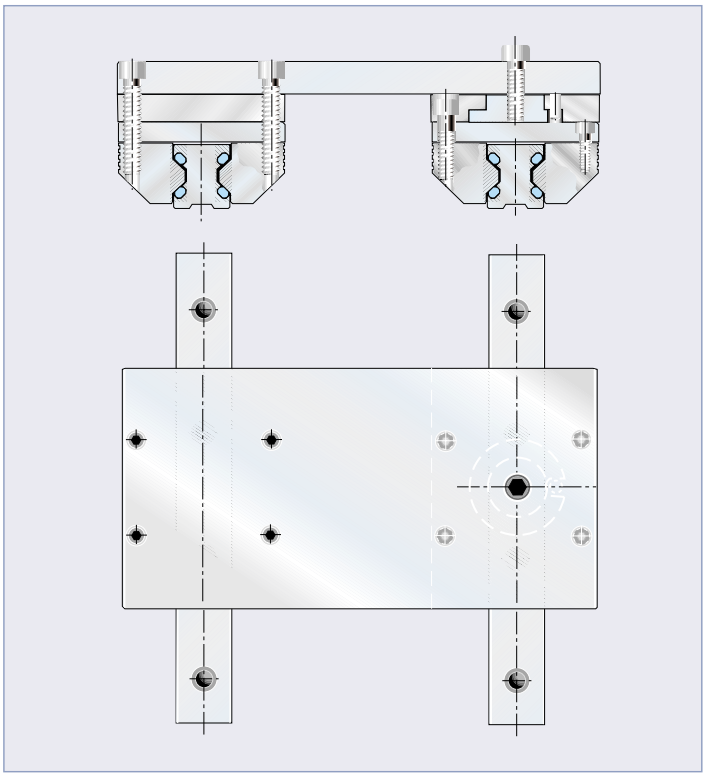

11.3 Single rails and roller shoes

Where single rails and roller shoes are used the mating structure takes the function of the slider.

The guide rails are put against the contact shoulder and screwed resp. screwed and dowelled. After final adjustment of linearity resp. parallelism the screws are tightened alternately starting from the center outwards.

Afterwards the slider is moved along the guide path. When the movement is uniform you can procede with mounting.

12. Coupling of guide rails

12.1 Spacing

Coupled rails with a length over L= 4000 mm are pieced together according to the HOERBIGER-ORIGA standard. Spacing according to the HOERBIGER-ORIGA standard guarantees a uniform bore shape over the whole guide and an optimum utilisation of the guide length.
For further mounting procede as described under point 11.

Pitch according to HOERBIGER-ORIGA standard: e.g. GDL-FD35-11400

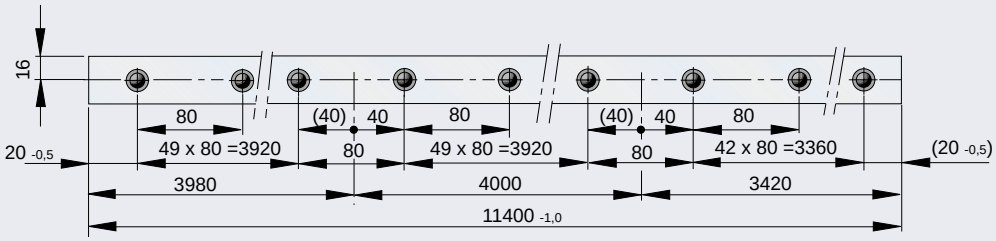

Mounting instructions

12.2 Mounting

Clean contact and mounting surfaces, then place the rails loosely on the guide path one behind the other one. With this the correct sequence of the production numbers has to be kept. (e.g. ...1...2...3...4 etc.).
The marking groove on the lower surface of the rail must always be on the same side.

The complete guide path should be aligned without gaps and lightly fastened, ensuring that joints are precisely aligned.

The joints are to be aligned exactly. This is effected best by means of two auxiliary cylinders (length 200 mm). They are inserted into the raceway at the joints and clamped with a device.

For further mounting procede as described under point 11.

Size	Auxiliary cyl. ø (mm)
12	11
15	11
20	14
25	16
35	27
45	35

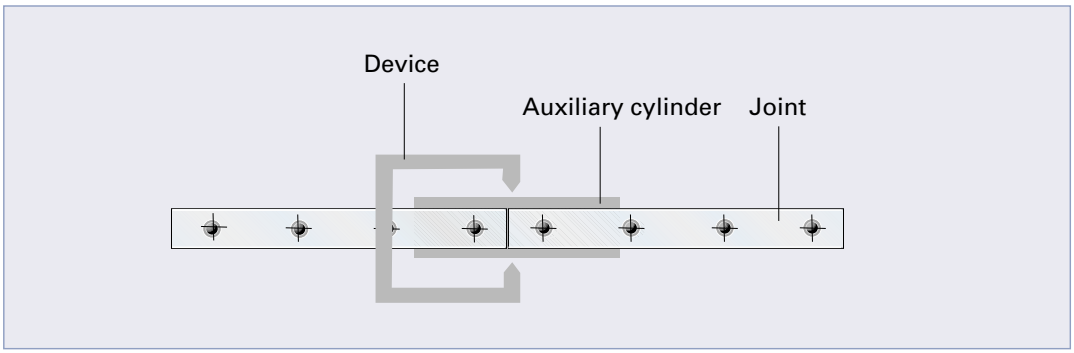

Size Calculation for Aluminium Roller Guides

We will be pleased to calculate the size of aluminium roller guide you require.

Copy this page, enter the requested technical data and send this page to your local technical adviser or to one of the contact addresses on the last page of this brochure.

Company: .....
.....
.....

Telefon: .....
Telefax: .....
E-mail: .....

Branch: .....
Department: .....
Name: .....
Date: .....

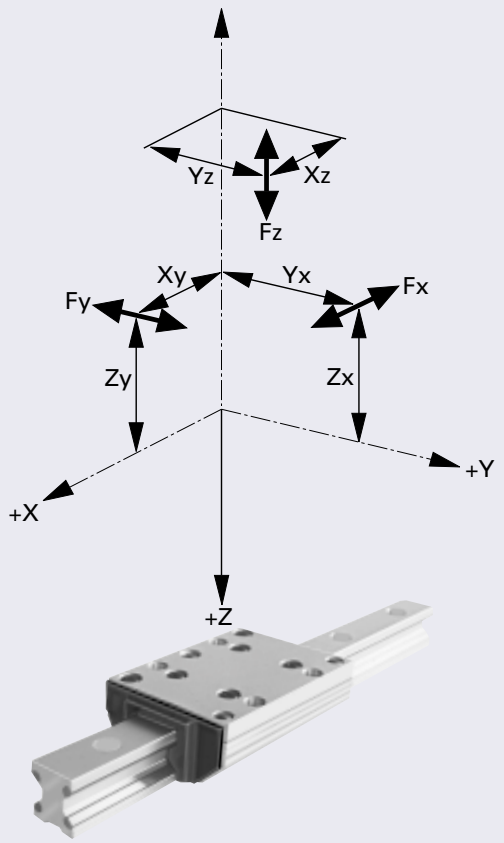

Loads
Forces Lever arms

F_x [N] =	Y_x [mm] =	Z_x [mm] =
F_Y [N] =	X_Y [mm] =	Z_Y [mm] =
F_Z [N] =	X_Z [mm] =	Y_Z [mm] =

Order number: .....
Technical data
Stroke [mm] .....
Mounting position Vertical ❑ at an ❑
Horizontal ❑ angle.....
Speed [m/s] .....
Acceleration [m/s²] .....
Lifetime (desired) L [km]
.....
Carrying length A [mm] .....
Carrying width B [mm] .....
Carrying length = The distance from centre to centre of two cassettes / pairs of roller shoes on a rail

Carrying width = With multi-track arrangement distance of the rails

Sketch:

Environment:
(Dirt. Humidity ...)
.....
.....
.....
.....
.....
.....
.....
.....

LINEAR DECELERATION

SHOCK ABSORBERS

HOERBIGER
ORIGA

Table of Contents Industrial Shock Absorber

	Data Sheet No.
Technical informations	1.70.001
Survey	1.70.001-13

Non-Adjustable Shock Absorber

Type SA 10, SA 10S	1.70.002
Type SA 12	1.70.003
Type SA 14, SA 14S, SA 14S2	1.70.004
Type SA 20, SA 20S, SA 20S2	1.70.005
Type SA 20x25, SA 20Sx25, SA 20S2x25	1.70.005
Type SAI 25, SAI 25S,	1.70.006

Adjustable Shock Absorber

Type SA 1/4 x 1/2	1.70.100
Type SA 3/8 x 1D	1.70.101
Type SA 1/2 x 1M, SA 1/2 x 2M	1.70.102
Type SA 1/4 x 1, SA 1/4 x 2	1.70.103
Type SA 3/4 x 1, SA 3/4 x 2, SA 3/4 x 3	1.70.104
Type SA 1 1/8 x 2, SA 1 1/8 x 4	1.70.105
Type SA -A 3/4 x 1, SA 3/4 x 2, SA 3/4 x 3	1.70.006
Type SA-A 1 1/8 x 2, SA -A 1 1/8 x 4	1.70.107
SA -A 1 1/8 x 6	

HOERBIGER-ORIGA GMBH · Südliche Römerstraße 15 · D-86972 Altenstadt · Tel. +49 +8861 221-0 · Fax +49 +8861 221-1305 · E-mail preu@hoerbiger.de
HOERBIGER-ORIGA GMBH · Industriestr. 8 · D-70794 Filderstadt · Tel. +49 +7158 1703-0 · Fax +49 +7158 64870 · E-mail dmarket@hoerbiger-origa.com
HOERBIGER-ORIGA LTD. · Tewkesbury Industrial Estate · Tewkesbury GL 20 8 ND GB · Tel. +44 1684 85 00 00 · Fax +44 1684 85 05 55· E-mail sales@hoerbiger-origa.com
HOERBIGER-ORIGA Pneumatik GmbH · Dr. Alexander-Schärf-Straße 12 · A-2700 Wiener Neustadt · Tel. +43 +2622 26071-0 · Fax +43 +2622 26071-5 · E-mail amarket@hoerbiger-origa.com
HOERBIGER-ORIGA AB · Kungsgatan 10, Box 67 · SE-73622 Kungsör · Tel. +46 227 411 00 · Fax +46 227 411 29 · E-mail semarket@hoerbiger-origa.com
Internet www.hoerbiger-origa.com

PNEUMATIC
GROUP

INDUSTRIAL SHOCK ABSORBERS
ADJUSTABLE AND NON-ADJUSTABLE

HOERBIGER
ORIGA

SMOOTH, CONTROLLED STOPPING OF MOVING LOADS

HOERBIGER-ORIGA shock absorbers prevent damage to moving parts and to machines and plant: destructive impact forces are absorbed by controlled linear deceleration.

HOERBIGER-ORIGA SHOCK ABSORBERS LET YOU

- increase operating speeds
- increase operating loads
- increase system performance
- increase operating reliability
- reduce stresses on equipment
- reduce production costs
- reduce noise levels

All moving parts in a production process have to be stopped without damage to themselves or to the stopping devices of the machines and plant.
The high impact forces have to be reduced in a controlled manner: to bring a moving load to a standstill, the kinetic energy generated by the movement has to be dissipated.
The heavier the moving load and the faster it moves, the higher the kinetic energy.
In automation especially, shorter and shorter cycle times are demanded, so that stopping times are greatly reduced while kinetic energy levels are dramatically increased. These again have to be dissipated in a controlled manner.

Some commonly used stopping devices such as springs, rubber buffers or dashpots actually increase shock loading instead of reducing it – they do not dissipate energy at a uniform rate.
For smooth dissipation of the kinetic energy we recommend the use of hydraulic shock absorbers.

HOERBIGER-ORIGA shock absorbers convert the kinetic energy generated by the deceleration of the load into thermal energy.
Optimum operating conditions are achieved if the energy is dissipated almost uniformly, i.e. if the moving mass is brought to a halt in the shortest distance, in the shortest time and without sudden peak loads during the stroke.

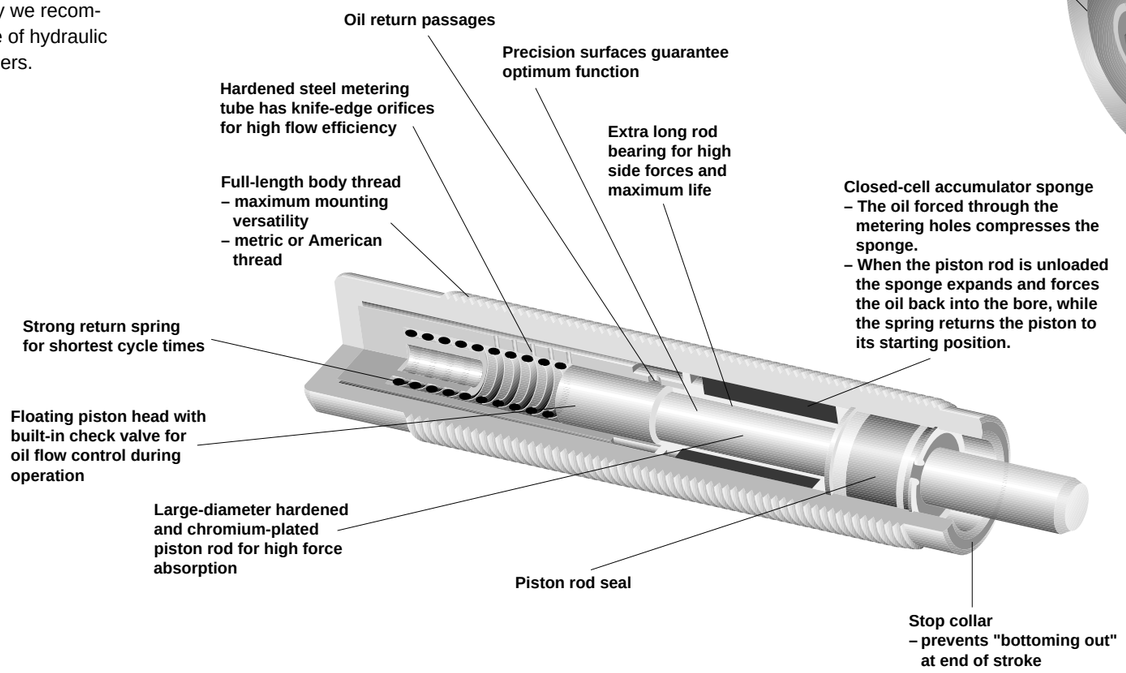

A WIDE RANGE OF APPLICATIONS

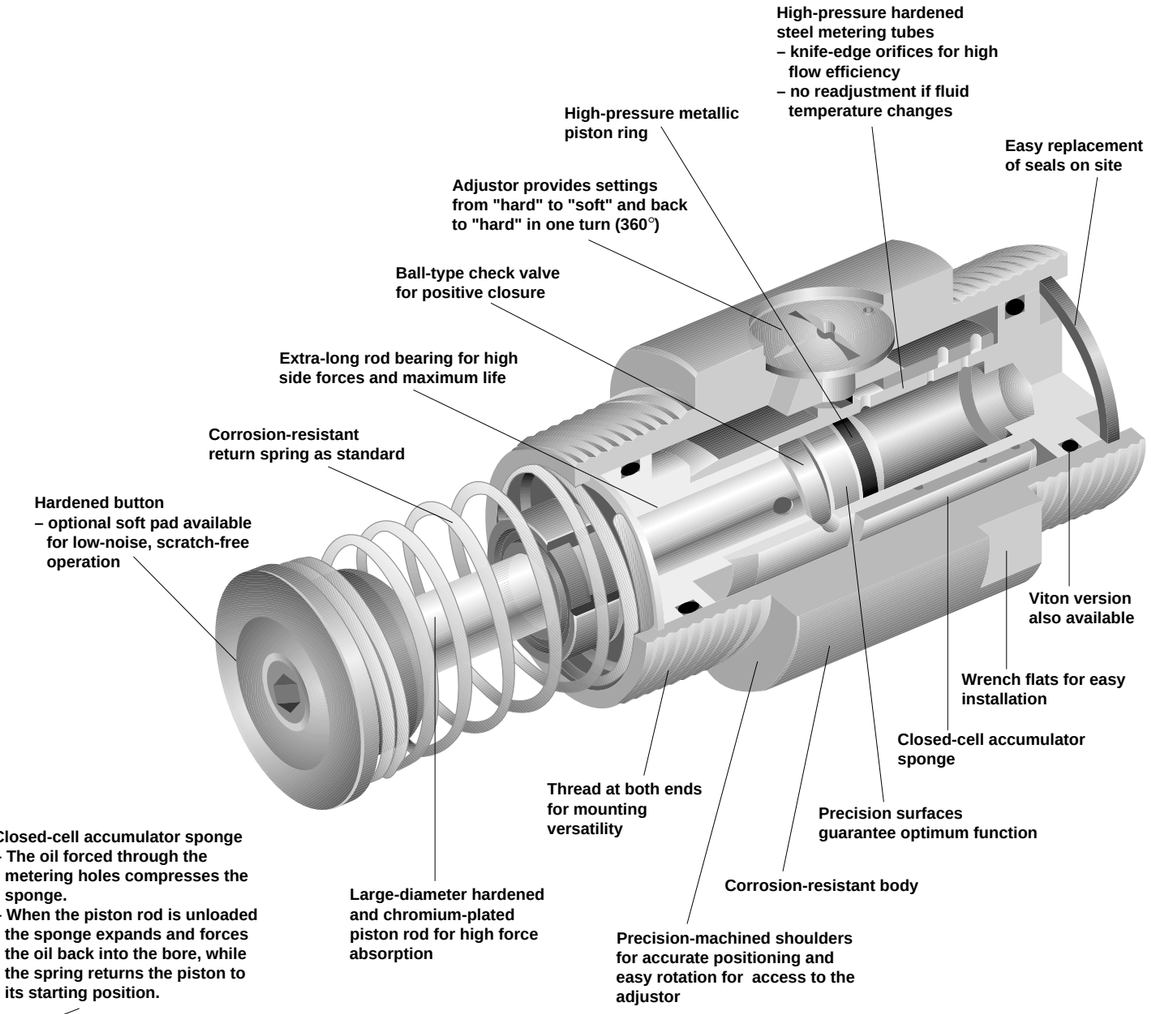

Simplify your design work by installing our shock absorber dimensions on your system. The file is compatible with all popular CAD systems.

ABSORBING SHOCKS

Ordinary shock absorbers, springs, buffers and pneumatic cushioning cannot match the performance of HOERBIGER-ORIGA shock absorbers.
These shock absorbers match the speed and mass of the moving object and bring it smoothly and uniformly to rest.
Springs and buffers, on the other hand, store energy rather than dissipate it.
Although the moving object is stopped, it bounces back and this leads to fatigue in materials and components which can cause premature breakdown of the machine.
Pneumatic cushioning provides a better solution because the energy is actually converted, but because of the compressibility of air the maximum braking force is generated at the end of the stroke, which can lead to excessive loads on components.

Hydraulic dashpots also cause excessive loads because peak resistance comes at the beginning of the stroke and then quickly falls away. This generates unnecessarily high braking forces.

The Force/Stroke Diagram clearly shows these effects. The shock absorber curve is ideal because all the energy is dissipated by linear deceleration without initial impact or final rebound.

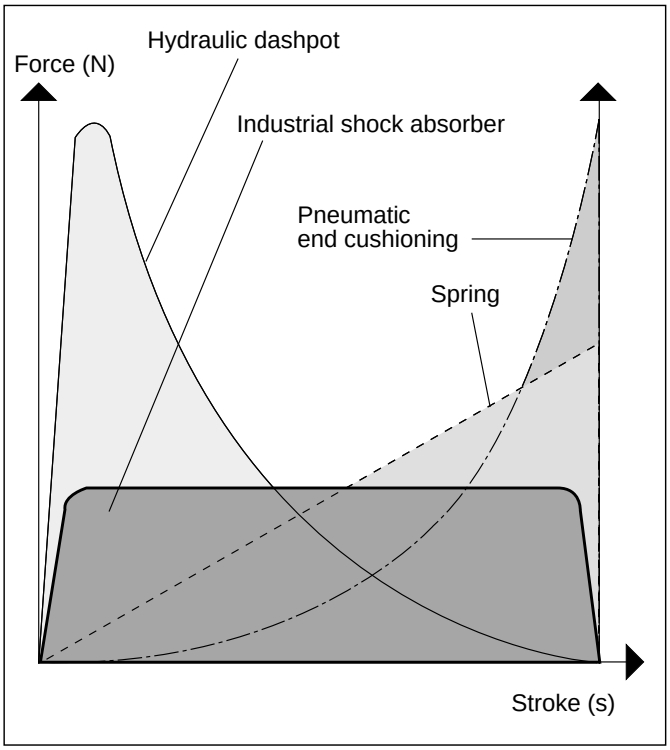

Stopping Time
Both damping units stop the same mass from the same speed with the same stroke. Therefore they do the same work but the industrial shock absorber reduces the stopping time by 60 to 70 %.

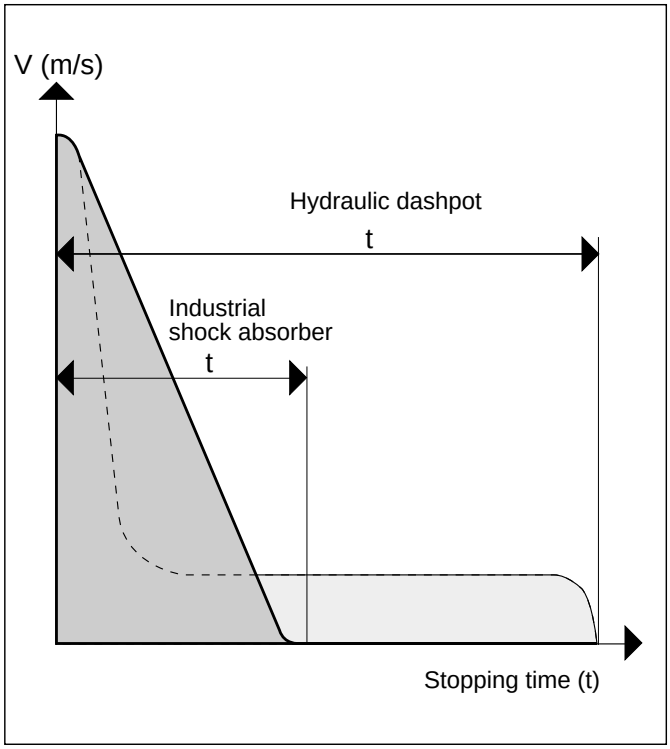

SELECTION OF SHOCK ABSORBER TYPE

HOERBIGER-ORIGA shock absorbers are available in two main types, to suit different applications and installation requirements. After selection of the appropriate type, sizing is determined by calculation.

COMPACT SERIES WITH FULL-LENGTH BODY THREAD

This compact, space-saving series is available in adjustable and non-adjustable versions and can be installed in many different ways, e.g. in a tapped blind hole, in a tapped through-hole, in a clearance hole in a flange or bracket, etc.

UNIVERSAL SERIES

This versatile, adjustable series with various mounting accessories is designed to stop heavier loads. It is especially suited to applications which require several of the same shock absorbers with the same stroke length.

MOUNTING METHODS

HOERBIGER-ORIGA shock absorbers are designed for a variety of mountings, which can be either built into machines or supplied as accessories.

ACCUMULATORS

Normally shock absorbers with internal accumulators are used. This simplifies installation by eliminating external piping and oil storage.
However, in applications with short cycle times and high kinetic energy the oil can become overheated. In this case an external accumulator should be used so that the oil can be cooled in the external circuit.

SHOCK ABSORBER RETURN STROKE

- Piston rod with return spring combined with internal accumulator
- Return stroke actuated by compressed air or mechanically, combined with external accumulator. With this version a delayed return stroke is also possible.

OPTIONS

- Stop collars for front or rear mounting – these provide a positive stop to prevent damage caused by the piston "bottoming out".
  They also allow precise setting of the stroke length.
- Soft pad for the hardened steel button – to avoid surface damage and reduce noise levels.

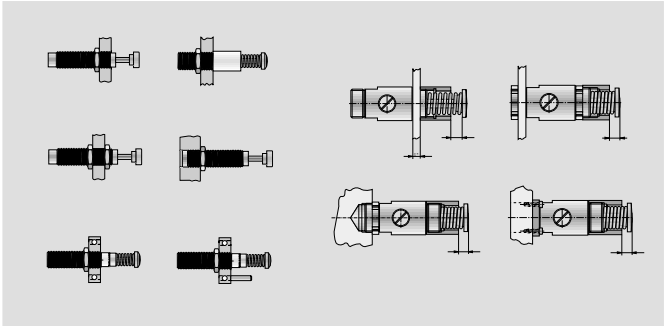

THE SELECTION OF SHOCK ABSORBERS

CORRECT CHOICE OF SHOCK ABSORBER

The type of shock absorber and its mounting method are mainly determined by the application.
In most applications, shock absorbers with internal accumulators are preferred to those with external accumulators.
Shock absorbers with internal accumulators are supplied prefilled with oil and therefore ready for immediate use, where as shock absorbers with external accumulators require additional equipment, resulting in higher installation costs.

SELECTION CRITERIA

- Type of shock absorber
  - with internal accumulator
  - with external accumulator including air/oil tank
- Type of piston rod return
  - return spring
  - air or mechanical
- Stroke length
  Use the longest stroke possible taking any side loads into account.
  - maximum impact force reduction

ACCUMULATORS

- Internal accumulator
  The fluid displaced by the piston compresses a nitrogen-filled, closed-cell sponge.
  When the piston is unloaded the return spring pushes the piston back to its rest position. At the same time the compressed sponge expands and forces the fluid back into the high pressure chamber.
- External accumulator
  The use of external accumulators is recommended where high energy conversion is needed or excess heat dissipation is required, e.g. in applications with short cycle times or in high temperature areas.

  The external accumulator, consisting of an open or closed tank, is connected to the shock absorber by pipework.
  The oil heated in the shock absorber circulates between the tank and the shock absorber and is therefore continuously cooled during operation.

Note:
The tank should always be installed higher than the shock absorber and the connecting pipework should be as short as possible.
If possible there should also be a 10 µm filter between the two units.
If the tank is installed further away from the shock absorber there must be a positive oil circulation system (see diagram) to ensure that the oil actually flows through the tank and is cooled down.

PISTON ROD RETURN

Piston rod return is actuated by

- Return springs
  In the self-contained units, a built-in spring returns the piston rod to its rest position when it is unloaded.
- Air/Oil
  In units with external accumulators an air/oil system or a mechanical device is used for piston rod return.
- Mechanical units
  Mechanical rod return is mostly used in types with a clevis mounting, with actuation by another unit via levers.

HOERBIGER-ORIGA SA-A Series shock absorbers feature steplessly adjustable stroke, time-delay damping and adjustable rod return forces.
The SA Series is fitted with return springs as standard. If these types are used with an external accumulator for better heat dissipation, this does not need to be pressurized because the spring returns the rod.

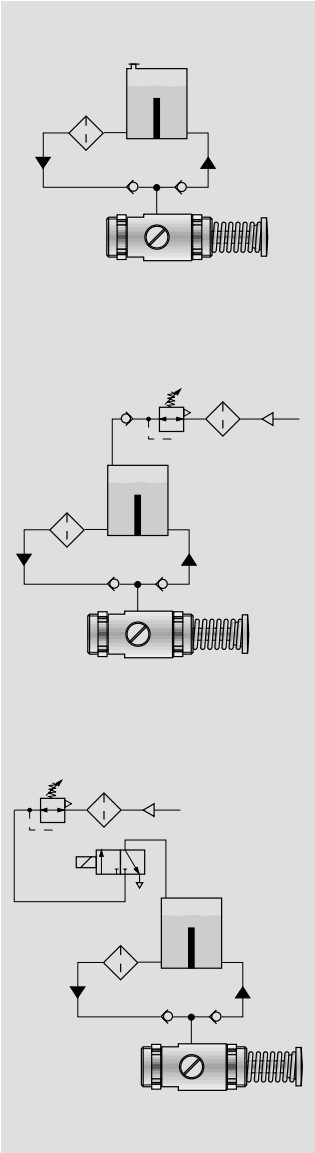

CALCULATIONS FOR SHOCK ABSORBER SELECTION

SELECTION FACTORS

- How much energy has to be dissipated during each deceleration stroke (cycle)
- How much energy has to be dissipated during one hour of operation
- The Effective Mass

EFFECTIVE MASS

Effective Mass is a very important factor in correctly sizing a shock absorber.
It indicates whether the shock absorber can be adjusted to perform properly. It also prevents under- or over-sizing where propelling forces are involved or velocities are very high or very low.

As a general rule, the next larger size of shock absorber is selected if the impact velocity is under 0.3 m/s and/ or the propelling force energy (F x S) exceeds 50 % of the calculated E3 value.

The higher the Effective Mass, the higher the impact force at the end of the shock absorber stroke, whereas low Effective Mass generates very high impact forces at the beginning of the stroke.
These two points have to be considered in the calculation as they can lead to serious damage over a longer period of time..
Minimum/ maximum Effective Mass is laid down for all HOERBIGER-ORIGA shock absorbers (see Table 1.70.001-13).
Effective Mass is calculated using the following formula.

$$\mathbf{M.eff} = \frac{2 \cdot W_3}{V^2}$$

SYMBOLS

C	= Cycles per hour
t	= Time in seconds
s	= Shock abs. stroke [m]
V, Vi	= Impact velocity [m/s]
Vt	= Velocity of rotating table [m/s]
g	= Gravitational acceleration [m/s²]
d	= Cylinder diameter [mm]
b	= Radius to centre of gravity [m]
m	= Mass [kg]
ma	= Additional mass [kg]
H	= Height [m]
Fp	= Propelling force [N]
W_1	= Inertial energy [Nm]
W_2	= Propelling force energy [Nm]
W_3	= Total energy per cycle [Nm]
W_4	= Total energy to be dissipated per hour [Nm/h]
P	= Pressure [bar]
M	= Torque [Nm]
P_m	= Motor power [kW]
R_C	= Radius to cylinder [m]
ω	= Angular velocity [rad/s]
M.eff	= Effective Mass
μ	= Coefficient of friction
I	= Moment of inertia [Nm/s]
r	= Radius of table [m]
D	= Distance to shock absorber [m]
2r	= Diameter of table [m]
α	= Slope angle [°]

FORMULAE

$$W_1 = \frac{m \cdot V^2}{2} = [Nm] = m \cdot g \cdot h\ [Nm]$$ *inertia and free fall*

$$= \frac{1 \cdot \omega^2}{2} = [Nm]$$ *rotating mass*

$$= \frac{m \cdot V_i^2}{4} = [Nm]$$ *rotating table*

$$W_2 = Fp \cdot s = [Nm]$$ oder m x g x h *for free-falling mass*

$$W_3 = W_1 + W_2\ [Nm]$$

$$W_4 = W_3 \cdot C\ [Nm/h]$$

$$Fp = 0{,}078 \cdot d^2 \cdot P = [N]$$ *determines the cylinder force*

$$Fp = \frac{2500 \cdot Pm}{V} = [N]$$ *etermines the working force of an electric motor*

$$Vt = \omega \cdot a = [m/s]$$ *determines the velocity at distance a from pivot*

$$V = \sqrt{2 \cdot g \cdot H} = [m/s]$$ *determines the impact velocity of a free-falling mass*

$$V_i = \frac{V \cdot b}{a} = [m/s]$$ *determines the impact velocity of a rotating mass*

$$I = m \cdot a^2\ [Nm/s^2]$$

$$t = \frac{2{,}6 \cdot s}{V} = [s]$$ *determines the stopping time in the course of a stroke*

$$M.eff = \frac{2 \cdot W_3}{V^2} = [kg]$$ *determines the Effective Mass*

EXAMPLES OF CALCULATIONS FOR SHOCK ABSORBER SELECTION

Example 1 – *Vertical Free-Falling Load*

m = 25 kg
H = 0.4 m
C = 140/h
s = 0.05 m

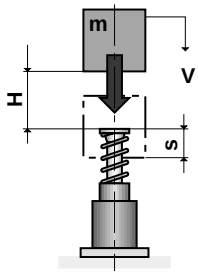

Calculation

$W_1 = m \cdot g \cdot H$
$= 25 \cdot 9.81 \cdot 0.4$
$= 98$ Nm

$W_2 = m \cdot g \cdot s$
$= 25 \cdot 9.81 \cdot 0.05$
$= 13$ Nm

$W_3 = W_1 + W_2$
$= 98 + 13$
$= 111$ Nm

$W_4 = W_3 \cdot C$
$= 111 \cdot 140$
$= 15540$ Nm/h

$V = \sqrt{2 \cdot g \cdot H}$
$= \sqrt{2 \cdot 9.81 \cdot 0.4}$
$= 2.8$ m/s

$M.eff = \frac{2 \cdot W_3}{V^2} = \frac{2 \cdot 111}{2.8^2}$
$= \frac{222}{7.84} = 28$ kg

entspricht Typ: SA1/2 x 2

Example 2 – *Vertical Load Propelled Downwards*

m = 450 kg
V = 1.2 m/s
d = 50 mm
P = 6 bar
C = 100/h
s = 0.1 m

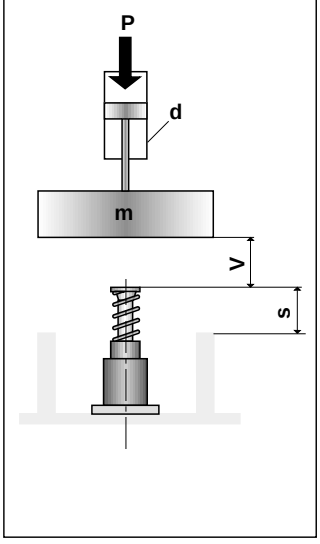

Calculation

$W_1 = \frac{m \cdot V^2}{2} = \frac{450 \cdot 1.2^2}{2}$
$= 324$ Nm

$F_p = (0{,}078 \cdot d^2 \cdot P) + (g \cdot m)$
$= (0.078 \cdot 50^2 \cdot 6) + (9.81 \cdot 450)$
$= 5585$ N

$W_2 = F_p \cdot s$
$= 5585 \cdot 0.1$
$= 558$ Nm

$W_3 = W_1 + W_2$
$= 324 + 558$
$= 882$ Nm

$W_4 = W_3 \cdot C$
$= 882 \cdot 100$
$= 88200$ Nm/h

$M.eff = \frac{2 \cdot W_3}{V^2} = \frac{2 \cdot 882}{1.2^2}$
$= 1225$ kg

Select Type: SA 1 1/8x4

Example 3 – *Vertical Load Propelled Upwards*

m = 450 kg
V = 1.2 m/s
P = 6 bar
d = 100 mm (2 Cylinders)
s = 0.1 m
C = 200/h

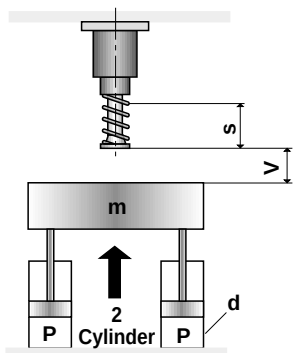

Calculation

$W_1 = \frac{m \cdot V^2}{2} = \frac{450 \cdot 1.2^2}{2}$
$= 324$ Nm

$F_p = 2(0{,}078 \cdot d^2 \cdot P) - (g \cdot m)$
$= 2(0.078 \cdot 100^2 \cdot 6) - (9.81 \cdot 450)$
$= 4950$ N

$W_2 = F_p \cdot s$
$= 4950 \cdot 0.1$
$= 495$ Nm

$W_3 = W_1 + W_2$
$= 324 + 495$
$= 819$ Nm

$W_4 = W_3 \cdot C$
$= 819 \cdot 100$
$= 81900$ Nm/h

$M.eff = \frac{2 \cdot W_3}{V^2} = \frac{2 \cdot 819}{1.2^2}$
$= 1137$ kg

Select Type: SA11/8x4

Example 4 – *Moving Load Without Propelling Force*

m = 900 kg
V = 1.5 m/s
F_p = 0
C = 200/h

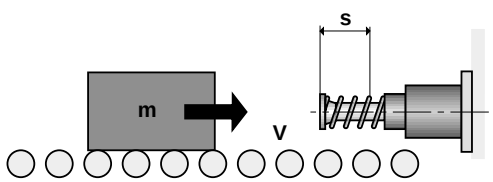

Calculation

$W_1 = \frac{m \cdot V^2}{2} = \frac{900 \cdot 1.5^2}{2}$
$= 1012$ Nm

$W_2 = 0$

$W_3 = W_1 + W_2$
$= 1012$

$W_4 = W_3 \cdot C$
$= 1012 \cdot 200$
$= 202400$ Nm/h

$M.eff = \frac{2 \cdot W_3}{V^2} = \frac{2 \cdot 1012}{1.5^2}$
$= 900$ kg

Select Type: SA 1 1/8x4

EXAMPLES OF CALCULATIONS FOR SHOCK ABSORBER SELECTION

Example 5 – *Moving Load With Propelling Force*

m = 900 kg
V = 1.5 m/s
d = 50 mm
P = 6 bar
C = 100/h
s = 0.05 m

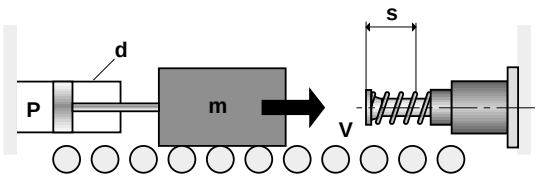

Calculation

$$W_1 = \frac{m \cdot V^2}{2} = \frac{900 \cdot 1.5^2}{2}$$
= 1012 Nm

$$F_p = 0{,}078 \cdot d^2 \cdot P$$
$= 0{,}078 \cdot 50^2 \cdot 6$
= 1170 N

$$W_2 = F_p \cdot s$$
$= 1170 \cdot 0{,}05$
= 58.5 Nm

$$W_3 = W_1 + W_2$$
$= 1012 + 58.5$
= 1070.5 Nm

$$W_4 = E_3 \cdot C$$
$= 1070.5 \cdot 100$
= 107050 Nm/h

$$M.eff = \frac{2 \cdot E_3}{V^2} = \frac{2 \cdot 1070.5}{1.5^2}$$
= 951 kg

Select Type: SA 1 1/8x2

Example 6 – *Moving Load Propelled by Motor*

m = 900 kg
V = 1.5 m/s
P_m = 1 kW
C = 100/h
s = 0.05 m

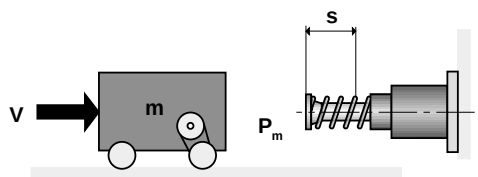

Calculation

$$W_1 = \frac{m \cdot V^2}{2} = \frac{900 \cdot 1.5^2}{2}$$
= 1012 Nm

$$F_p = \frac{2500 \cdot P_m}{V} = \frac{2500 \cdot 1}{1.5}$$
= 1666 N

$$W_2 = F_p \cdot s$$
$= 1666 \cdot 0.05$
= 83 Nm

$$W_3 = W_1 + W_2$$
$= 1012 + 83$
= 1095 Nm

$$W_4 = W_3 \cdot C$$
$= 1095 \cdot 100$
= 109500 Nm/h

$$M.eff = \frac{2 \cdot W_3}{V^2} = \frac{2 \cdot 1095}{1.5^2}$$
= 973 kg

Select Type: SA1 1/8x2

Example 7 – *Moving Load Propelled by Rollers (Conveyor with Chain/Belt Drive)*

m = 80 kg
V = 1.0 m/s
μ = 0.3
C = 300/h
s = 0.025 m

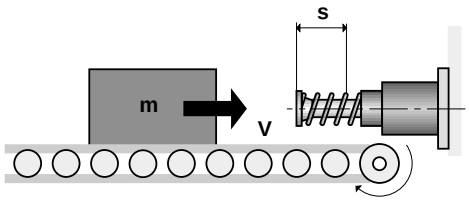

Calculation

$$W_1 = \frac{m \cdot V^2}{2} = \frac{80 \cdot 1.0^2}{2}$$
= 40 Nm

$$W_2 = F_p \cdot s$$
$= 80 \cdot 0.3 \cdot 9.81 \cdot 0.025$
= 5.9 Nm

$$W_3 = W_1 + W_2$$
$= 40 + 5.9$
= 45.9 Nm

$$W_4 = W_3 \cdot C$$
$= 45.9 \cdot 300$
= 13770 Nm/h

$$M.eff = \frac{2 \cdot W_3}{V^2} = \frac{2 \cdot 45.9}{1}$$
= 91.8 kg

Select Type: SAI 25

Example 8 – *Load Moving Down a Slope*

m = 200 kg
α = 15°
H = 0.2 m
C = 100/h
s = 0.05 m

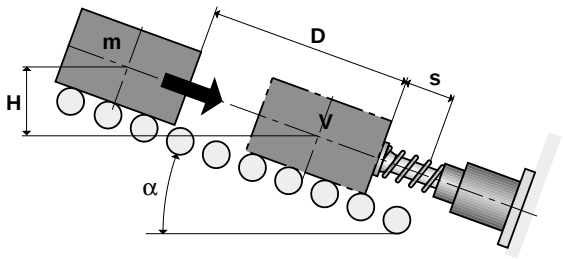

Calculation

$$W_1 = m \cdot g \cdot H$$
$= 200 \cdot 9.81 \cdot 0.2$
= 392.4 Nm

$$W_2 = m \cdot g \cdot \sin\alpha \cdot s$$
$= 200 \cdot 9.81 \cdot 0.26 \cdot 0.05$
= 25.51 Nm

$$W_3 = W_1 + W_2$$
$= 392{,}4 + 25.51$
= 417.91 Nm

$$W_4 = W_3 \cdot C$$
$= 417.91 \cdot 100$
= 41791 Nm/h

$$V = \sqrt{2 \cdot g \cdot H}$$
$= \sqrt{2 \cdot 9.81 \cdot 0.2}$
= 1.98 m/s

$$M.eff = \frac{2 \cdot W_3}{V^2} = \frac{2 \cdot 417.91}{1.98^2}$$
= 213 kg

Select Type: SA 3/4x2

EXAMPLES OF CALCULATIONS FOR SHOCK ABSORBER SELECTION

Example 9 – *Horizontally Moving Load, Rotating*

m = 400 kg
V = 0.4 m/s
a = 0.76 m
b = 0.74 m
F_p = 0
C = 100/h
s = 0.025 m

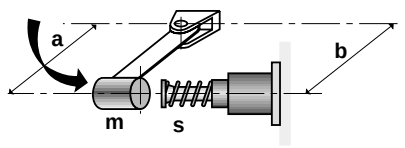

Calculation

$$W_1 = \frac{m \cdot V^2}{2} = \frac{400 \cdot 0.4^2}{2}$$
$= 32$ Nm

$$W_2 = F_p \cdot s$$
$= 0 \cdot 0.025$
$= 0$ Nm

$$W_3 = W_1 + W_2$$
$= 32$ Nm

$$W_4 = W_3 \cdot C$$
$= 32 \cdot 100$
$= 3200$ Nm/h

$$V_i = \frac{V \cdot b}{a} = \frac{0.4 \cdot 0.74}{0.76}$$
$= 0.39$ m/s

$$M.eff = \frac{2 \cdot W_3}{V^2} = \frac{2 \cdot 32}{0.4^2}$$
$= 400$ kg

Select Type: SA 1/2x1

Example 11 – *Horizontal, Rotary Index Table*

m = 60 kg
V = 0,5 m/s
M = 0
C = 100/h
b = 0.75 m
a = 0.92 m
s = 0.05 m

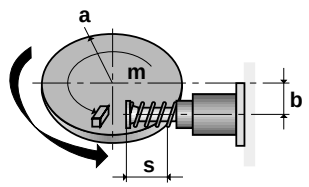

Calculation

$$W_1 = \frac{m \cdot V^2}{4} = \frac{60 \cdot 0.5^2}{4}$$
$= 3.75$ Nm

$$W_2 = F_p \cdot s = \frac{M}{b} \cdot s$$
$$= \frac{0}{0.3} \cdot 0.012 = 0$$

$$W_3 = W_1 + W_2$$
$= 3.75$ Nm

$$W_4 = W_3 \cdot C$$
$= 3.75 \cdot 100$
$= 375$ Nm/h

$$V_i = \frac{V \cdot b}{a} = \frac{0.5 \cdot 0.3}{0.6}$$
$= 0.25$ m/s

$$M.eff = \frac{2 \cdot W_3}{V^2} = \frac{2 \cdot 3.75}{0.5^2}$$
$= 30$ kg

Select Type: SA 1/4 x 1/2

Example 10 – *Horizontally Propelled Load, Rotating*

m = 400 kg
V = 1.2 m/s
a = 0.76 m
b = 0.74 m
C = 100/h
s = 0.05 m
P_m = **I_{cv}** = 0,735 kW

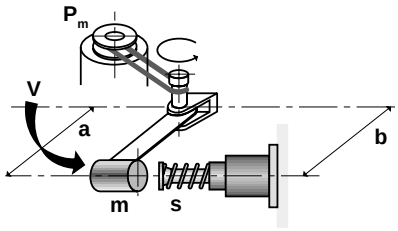

Calculation

$$W_1 = \frac{m \cdot V^2}{2} = \frac{400 \cdot 1.2^2}{2}$$
$= 288$ Nm

$$F_p = \frac{2500 \cdot P_m}{V} = \frac{2500 \cdot 0.735}{1.2}$$
$= 1531$ N

$$W_2 = F_p \cdot s$$
$= 1531 \cdot 0.05 = 77$ Nm

$$W_3 = W_1 + W_2$$
$= 288 + 77 = 365$ Nm

$$W_4 = W_3 \cdot C$$
$= 365 \cdot 100$
$= 36500$ Nm/h

$$V_i = \frac{V \cdot b}{a} = \frac{1.2 \cdot 0.74}{0,76}$$
$= 1.17$ m/s

$$M.eff = \frac{2 \cdot W_3}{V^2} = \frac{2 \cdot 365}{1.2^2}$$
$= 506$ kg

Select Type: SA 3/4x2

Example 12 – *Horizontal, Rotary Index Table, Propelled*

m = 400 kg
ω = 2 rad/s
M = 150 Nm
s = 0.05 m
b = 0.75 m
a = 0.92 m
C = 100/h

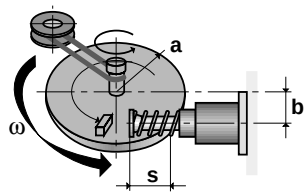

Calculation

$$V_t = \omega \cdot a$$
$= 2 \cdot 0.92 = 1.84$ m/s

$$W_1 = \frac{m \cdot V^2}{4} = \frac{400 \cdot 1.84^2}{4}$$
$= 339$ Nm

$$W_2 = \frac{M}{b} \cdot s$$
$$= \frac{150}{0.75} \cdot 0.05 = 10 \text{ Nm}$$

$$W_3 = W_1 + W_2$$
$= 339 + 10 = 349$ Nm

$$W_4 = W_3 \cdot C$$
$= 349 \cdot 100 = 34900$ Nm/h

$$V_i = \frac{V \cdot b}{a} = \frac{1.84 \cdot 0.75}{0.92}$$
$= 1.5$ m/s

$$M.eff = \frac{2 \cdot W_3}{V_i^2} = \frac{2 \cdot 349}{1.5^2}$$
$= 310$ kg

Select Type: SA 3/4x2

EXAMPLES OF CALCULATIONS FOR SHOCK ABSORBER SELECTION

Example 13 – *Vertical, Rotary*

m = 250 kg
V = 1.2 m/s
a = 0.85 m
b = 0.80 m
C = 100/h
s = 0.05 m

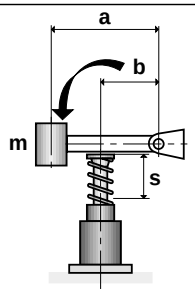

Calculation

$$W_1 = \frac{m \cdot V^2}{2} = \frac{250 \cdot 1.2^2}{2}$$
$= 180$ Nm

$$F_p = \frac{m \cdot g \cdot a}{b} = \frac{250 \cdot 9.81 \cdot 0.85}{0.80}$$
$= 2606$ N

$W_2 = F_p \cdot s$
$= 2606 \cdot 0.05 = 130$ Nm

$W_3 = W_1 + W_2$
$= 180 + 130 = 310$ Nm

$W_4 = W_3 \cdot C$
$= 310 \cdot 100 = 31000$ Nm/h

$$V_i = \frac{V \cdot b}{a} = \frac{1{,}2 \cdot 0.8}{0.85}$$
$= 1{,}13$ m/s

$$M.eff = \frac{2 \cdot W_3}{V_i^2} = \frac{2 \cdot 310}{1.13^2}$$
$= 484$ kg

Select Type: SA 3/4x2

Example 14 – *Vertical, Rollover*

m = 340 kg
r = **a** = 0.8 m
C = 100/h
ω = 1 rad/s
M = 1000 Nm
s = 0.05 m
b = 0.87 m

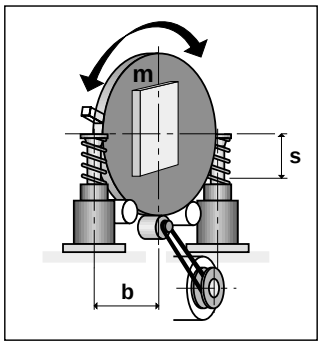

Calculation

$V = \omega \cdot a$
$= 0.8$ m/s

$$W_1 = \frac{m \cdot V^2}{4} = \frac{340 \cdot 0.8^2}{4}$$
$= 54.4$ Nm

$$W_2 = \frac{M \cdot s}{b} = \frac{1000 \cdot 0.05}{0.87}$$
$= 57.47$ Nm

$W_3 = W_1 + W_2$
$= 54.4 + 57.47 = 111.87$ Nm

$W_4 = W_3 \cdot C$
$= 111.87 \cdot 100 = 11187$ Nm/h

$$V_i = \frac{V \cdot b}{a} = \frac{0.8 \cdot 0.87}{0.8}$$
$= 0.87$ m/s

$$M.eff = \frac{2 \cdot W_3}{V_i^2} = \frac{2 \cdot 111.87}{0.87^2}$$
$= 295.6$ kg

Select Type: SALD 1/1x2M

Example 15 – *Horizontal, Rotary Movement. Rotary index table, with propelling torque (supplied by pneumatic rotary actuator)*

m = 50 kg
L = 800 mm
V = 0,5 ms $^{-1}$ (average)
R = 500 mm
M = 30 Nm
C = 100/h

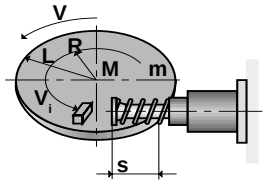

Calculation

$W_1 = m \cdot V^2 \cdot 0.25$
$= 50 \cdot 0.5 \cdot 0.25$
$= 3.125$ Nm

$$W_2 = \frac{M \cdot s}{R} = \frac{30 \cdot 0.012}{0.5}$$
$= 0.72$ Nm

$W_3 = W_1 + W_2$
$= 3.125 + 0.72 = 3.845$ Nm

$W_4 = W_3 \cdot C$
$= 3.845 \cdot 100 = 384.5$ Nm

$$V_i = \frac{V \cdot R}{L} = \frac{0.5 \cdot 0.225}{0.2}$$
$= 0{,}3125$ m/s

$$M.eff = \frac{2 \cdot W_3}{V_i^2} = \frac{2 \cdot 3.845}{0.3125^2}$$
$= 78.75$ kg

Select Type: SA 20x1

Example 16 – *Vertical, Rotating Beam Propelled by Pneumatic Cylinder*

M = 0.50 kg
d = 0.75 mm
P = 5 bar
ω = 3 rad/s
C = 100/h
a = 0.5 m
b = 0.8 m
s = 0.05 m
R_C = 0.45 m

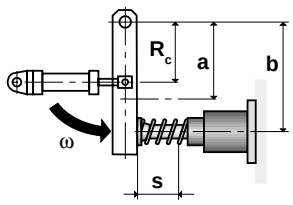

Calculation

$I = m \cdot a^2$
$= 850 \cdot 0.5^2 = 212$ Nm/s^2

$$W_1 = \frac{I \cdot \omega^2}{2} = \frac{212 \cdot 3^2}{2}$$
$= 954$ Nm

$$F_p = \frac{0{,}078 \cdot d^2 \cdot P \cdot R_C}{b}$$
$$= \frac{0.078 \cdot 752 \cdot 5 \cdot 0.45}{0.8}$$
$= 1234$ Nm

$W_2 = F_p \cdot s$
$= 1234 \cdot 0.05 = 62$ Nm

$W_3 = W_1 + W_2$
$= 954 + 62 = 1016$ Nm

$W_4 = W_3 \cdot C$
$= 1880.46 \cdot 100 = 188046$ Nm/h

$V = \omega \cdot b$
$= 3 \cdot 0.8$
$= 2.4$ Nm/s

$$M.eff = \frac{2 \cdot W_3}{V^2} = \frac{2 \cdot 1016}{2.4^2}$$
$= 353$ kg

Select Type: SA 1 1/8x2

EXAMPLES OF CALCULATIONS FOR SHOCK ABSORBER SELECTION

Example 17 – *Vertical, Motor-Driven, Rotating Arm with Load, Against Gravity*

m	=	70 kg	ω	=	3 rad/s	**C**	=	100/h
a	=	0.9 m	α	=	30°	**s**	=	0.05 m
b	=	0.7 m	**M**	=	300 Nm			

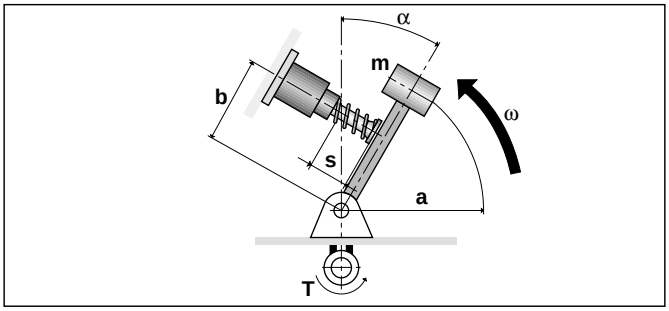

Calculation

$I = m \cdot a^2$

$= 70 \cdot 0.9 = 57\ Nm/s^2$

$W_1 = \frac{I \cdot \omega^2}{2} = \frac{57 \cdot 3^2}{2}$

$= 256\ Nm$

$F_p = \frac{M - (m \cdot g \cdot a \cdot \sin 30°)}{b}$

$= \frac{345 - (70 \cdot 9.81 \cdot 0.9 \cdot 0.5)}{0.7} = \frac{36}{0.7}$

$= 51\ Nm$

$W_2 = F_p \cdot s$

$= 51 \cdot 0.05 = 2.5\ Nm$

$W_3 = W_1 + W_2$

$= 256 + 2.5 = 258.5\ Nm$

$W_4 = W_3 \cdot C$

$= 258.5 \cdot 17 = 45237\ Nm/h$

$V = \omega \cdot b$

$= 3 \cdot 0.7$

$= 2.1\ Nm/s$

$M.eff = \frac{2 \cdot W_3}{V^2} = \frac{2 \cdot 258.5}{2.1^2}$

$= \frac{517}{4.41}$

$= 117\ kg$

Select Type: SA 3/4x2

Example 18 – *Vertical, Motor-Driven Rotating Arm with Load, Aided by Gravity*

m	=	160 kg	**b**	=	0.7 m	α	=	40°	**C**	=	175/h
a	=	0.9 m	ω	=	3 rad/s	**M**	=	300 Nm	**s**	=	0.05 m

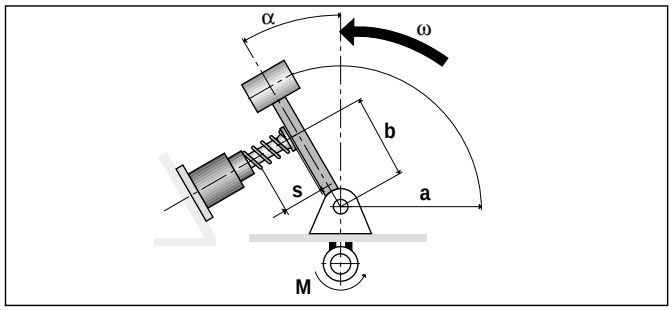

Calculation

$I = m \cdot a^2$

$= 160 \cdot 0.9 = 130\ Nm/s^2$

$W_1 = \frac{I \cdot \omega^2}{2} = \frac{130 \cdot 3^2}{2}$

$= 585\ Nm$

$F_p = \frac{M + (m \cdot g \cdot a \cdot \sin \alpha\ 40°)}{b}$

$= \frac{300 + (160 \cdot 9.81 \cdot 0.9 \cdot 0.5)}{0.7} = \frac{1147}{0.7}$

$= 1638\ Nm$

$W_2 = F_p \cdot s$

$= 1638 \cdot 0.05 = 82\ Nm$

$W_3 = W_1 + W_2$

$= 585 + 82 = 667\ Nm$

$W_4 = W_3 \cdot C$

$= 667 \cdot 175 = 116725\ Nm$

$V_i = \omega \cdot b = 3 \cdot 0.7$

$= 2.1\ m/s$

$M.eff = \frac{2 \cdot W_3}{V^2} = \frac{2 \cdot 667}{2.1^2}$

$= \frac{1334}{4.41}$

$= 302\ kg$

Select Type: SA 1 1/8x2

OVERVIEW OF ADJUSTABLE AND NON-ADJUSTABLE SHOCK ABSORBERS

Non-Adjustable Shock Absorbers

Type	Stroke (mm)	Effective Mass m_e (kg)		Max. Energy Absorption (Nm)		Thread Size	Data Sheet No.
		Min.	Max.	per stroke W_3	per hour W_4		
SA 10	6.5	1	7	3	22050	M10x1	1.70.002
SA 10 S	6.5	3.2	13	3	22050	M10x1	1.70.002
SA 12	10	0.9	16	8.5	28250	M12x1	1.70.003
SA 14	12.5	0.9	10	17	34000	M14x1.5 [1]	1.70.004
SA 14 S	12.5	8.6	86	17	34000	M14x1.5 [1]	1.70.004
SA 14 S2	12.5	68	205	17	34000	M14x1.5 [1]	1.70.004
SA 20	12.5	2.3	25	25	45000	M20x1.5	1.70.005
SA 20x25	24.6	2.3	16	50.8	68000	M20x1.5	1.70.005
SA 20 S	12.5	23	230	25	45000	M20x1.5	1.70.005
SA 20 Sx25	24.6	9	59	50.8	68000	M20x1.5	1.70.005
SA 20 S2	12.5	182	910	25	45000	M20x1.5	1.70.005
SA 20 S2x25	24.6	36	227	50.8	68000	M20x1.5	1.70.005
SAI 25	25.4	9	136	68	68000	M25x1.5	1.70.006
SAI 25 S	25.4	113	1130	68	68000	M25x1.5	1.70.006
SAI 25 S2	25.4	400	2273	68	68000	M25x1.5	1.70.006

Adjustable Shock Absorbers

Type	Stroke (mm)	Effective Mass m_e (kg)		Max. Energy Absorption (Nm)		Thread Size	Data Sheet No.
		Min.	Max.	per stroke W_3	per hour W_4		
SA 1/4 x 1/2	12.7	2.3	182	17	23000	M20x1.5	1.70.100
SA 3/8 x 1D	25.4	4.5	546	70	46000	M25x1.5 [2]	1.70.101
SALD 1/2 x 1M	25.4	4.5	1134	136	85000	M36x1.5	1.70.102
SALD 1/2 x 2M	50.8	9.5	2268	271	98000	M36x1.5	1.70.102
SA 1/2 x 1	25.4	4.5	545	130	86000	M33x1.5	1.70.103
SA 1/2 x 2	50.8	9.5	950	270	100000	M33x1.5	1.70.103
SA 3/4 x 1	25.4	27	3600	290	126500	M42x1.5	1.70.104
SA 3/4 x 2	50.8	43	6350	600	150000	M42x1.5	1.70.104
SA 3/4 x 3	76	55	9500	890	184000	M42x1.5	1.70.104
SA 1-1/8 x 2	50.8	72	13000	1380	172600	M64x2.0	1.70.105
SA 1-1/8 x 4	102	118	18200	2700	230000	M64x2.0	1.70.105
SA 1-1/8 x 6	152	200	32000	4150	288000	M64x2.0	1.70.105
SA-A 3/4 x 1	25.4	27	3600	290	184000 [3]	M42x1.5	1.70.106
SA-A 3/4 x 2	50.8	43	6350	600	230000 [3]	M42x1.5	1.70.106
SA-A 3/4 x 3	76	55	9500	890	276000 [3]	M42x1.5	1.70.106
SA-A 1-1/8 x 2	50.8	72	13000	1380	345000 [3]	M64x2.0	1.70.107
SA-A 1-1/8 x 4	102	118	18200	2700	460000 [3]	M64x2.0	1.70.107
SA-A 1-1/8 x 6	152	200	32000	4150	575000 [3]	M64x2.0	1.70.107

[1] Option: M14x1 thread [2] Option: M27x3 thread [3] Operation with external air-oil tank

Further shock absorber sizes (1-1/2", 2", 2-1/4", 3", 4") in various stroke lengths are also available on request

INSTALLATION TIPS

Mounting

HOERBIGER-ORIGA shock absorbers should generally be mounted on a rigid structure with adequate strength. The strength required should be calculated by the following formula:

$$\frac{2{,}5 \cdot W_3\ (max)}{S}$$

Avoid sideloads of more than 5° and align the centreline of the piston as closely as possible with the centre of gravity of the impacting load (see diagram).

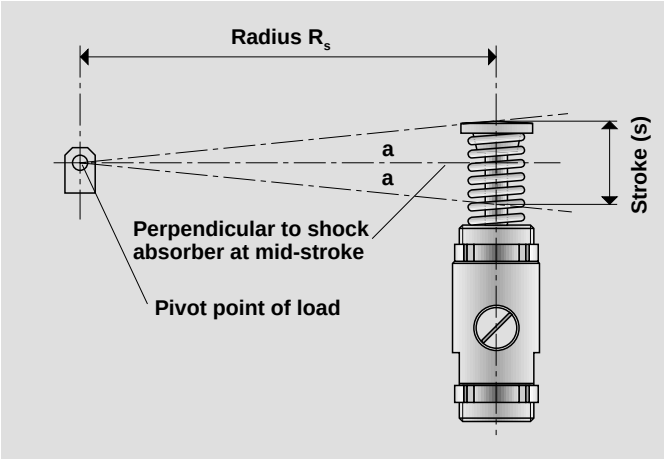

Installation Angle (a)	$\frac{S}{R_S}$	a	$\frac{S}{R_S}$	a
The installation angle (a) is found by dividing the shock absorber stroke (S) by the radius of the shock absorber from the pivot point (R). The installation angle should never exceed 5°. If it does, a shorter stroke or a longer radius must be used.	.0175	1/2°	.1051	3°
	.0349	1°	.1228	31/2°
	.0524	11/2°	.1405	4°
	.0699	2°	.1584	41/2°
	.0875	21/2°	.1763	5°

Positive Stops

External positive stops are always required to produce a firm work-positioning and prevent the shock absorber from "bottoming out". This is achieved either with external dead stops or a stop collar. These are located to stop the piston no more than 1.6 mm short of the end of stroke.

Oil Filling

HOERBIGER-ORIGA shock absorbers with return springs are supplied prefilled with oil and ready for immediate use without any additional pipework etc..
For shock absorbers without return springs an external accumulator or air/oil tank is required.
The air/oil tank is filled with the correct oil up to the "Full" mark (do not overfill), then the shock absorber can be operated at low speed while it is being finally adjusted.

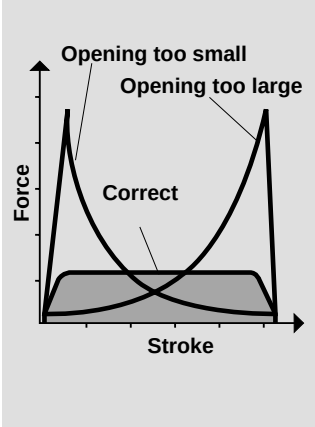

Adjustment

All HOERBIGER-ORIGA shock absorbers are supplied with their adjustment preset at 90°, which is midway between the "hard" and "soft" settings.
To adjust the shock absorber, first loosen the adjustor's lock screw with an Allan key.
Then impact the load slowly on the shock absorber. If the initial impact is too hard, use a screwdriver or coin to rotate the adjustor towards "soft" (18) on the dial. If the initial impact is too soft, rotate the adjustor in the opposite direction towards "hard" (0). When the setting is correct, retighten the adjustor's lock screw with the Allan key.
The shock absorber is properly adjusted when there is no initial impact at the start of the stroke and no hard set-down at the end of the stroke.
If hard set-down persists despite proper adjustment, check whether the positive stop is set correctly to keep the shock absorber piston no more than 1.6 mm off the bottom at end of stroke.

ORIGA Shock Absorbers

Hydraulic Industrial Shock Absorbers

Type:
• Non-adjustable

Series SA
SA 10
- For smaller effective masses

SA 10 S
- For larger effective masses

Basic Version with:
• Integral stop collar
• 1 mounting nut
• Soft pad

Accessories:
• Universal flange

Energy Capacity

Type	Stroke (mm)	Effective Mass (kg)		Max. Energy Capacity (Nm)	
		Min.	Max.	per stroke W_3	per hour W_4
SA 10	6.5	1	7	3	22050
SA 10 S	6.5	3.2	13	3	22050

Technical Data

Characteristic		Unit	Comments
Impact velocity		m/s	0.15 - 2.2
Operating temperature range		°C	-10 to +70
Installation			In any position
Force of internal return spring		N	3 - 6
Max. deviation of impacting force from centre axis of shock absorber			±3°
Weight (mass)		kg	0.015
Min. mounting strength required		N	1200 [1)]
Materials	Body		Steel, black oxide finish
	Piston rod		Steel, hardened, ground, hard-chrome plated
	Accessories		Steel, black oxide finish or aluminium, anodized

[1)] based on $\frac{2.5 \cdot W_3}{\text{stroke}}$

For product group overview see 1.70.001E
For design and installation notes see 1.70.001E

Data Sheet No.1.70.002E-1

A1P563E00DAA00X

The right to make technical modifications is reserved

Dimensions (mm)

Type: SA 10, SA 10 S

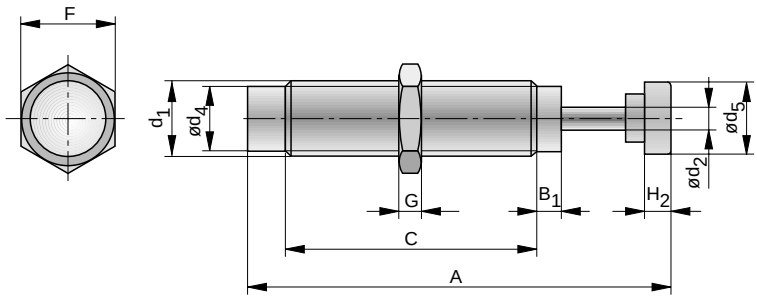

Dimensions (mm)
Universal Flange

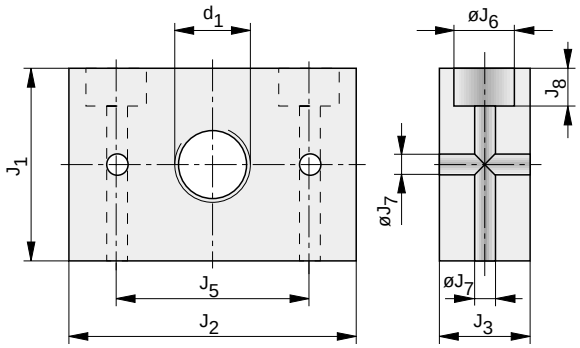

Dimensions Table (mm)

A	B_1	C	d_1	ød_2	ød_4	ød_5	F	G	H_2	J_1	J_2	J_3	J_5	øJ_6	øJ_7	J_8
50.8	3.3	33.3	M10x1	3	8.6	8.6	12.5	3	3.6	25.4	38	12	25.4	8	4.5	5

Order Instructions

Product	Order Instructions	
	Type	**Order No.**
Shock absorber for smaller effective masses	**SA 10**	**7900**
Shock absorber for larger effective masses	**SA 10 S**	**7907**
Additional mounting nut	**LN 10**	**7909**
Universal flange	**UM 10**	**7902**

ORIGA Shock Absorbers

Hydraulic Industrial Shock Absorbers

Type:
• Non-adjustable

Series SA
SA 12

Basic Version with :
• Integral stop collar
• 1 mounting nut

Accessories:
• Soft pad
• Universal flange

Energy Capacity

Type	Stroke (mm)	Effective Mass (kg)		Max. Energy Capacity (Nm)	
		Min.	Max.	per stroke W_3	per hour W_4
SA 12	10	0.9	16	8.5	28250

Technical Data

Characteristic		Unit	Comments
Impact velocity		m/s	0.3 - 4.5
Operating temperature range		°C	-40 to +82
Installation			In any position
Force of internal return spring		N	4.5 - 11
Max. deviation of impacting force from centre axis of shock absorber			±3°
Weight (mass)		kg	0.040
Min. mounting strength required		N	2200 [1)]
Materials	Body		Steel, black oxide finish
	Piston rod		Steel, hardened, ground, hard-chrome plated
	Accessories		Steel, black oxide finish or aluminium, anodized

[1)] based on $\frac{2.5 \cdot W_3}{\text{stroke}}$

For product group overview see 1.70.001E
For design and installation notes see 1.70.001E

Data Sheet No. 1.70.003E-1

A1P564E00DAA00X

The right to make technical modifications is reserved

HOERBIGER ORIGA

Dimensions (mm)

Type: SA 12

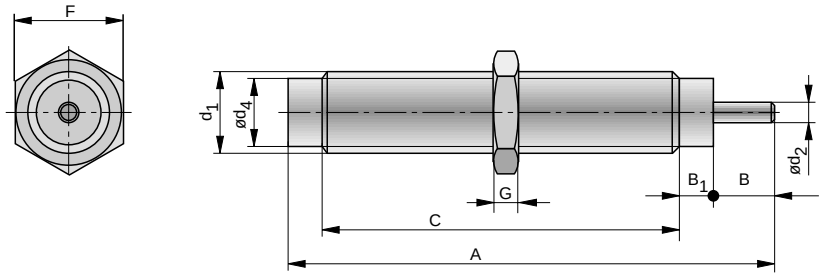

Dimensions (mm) Universal Flange

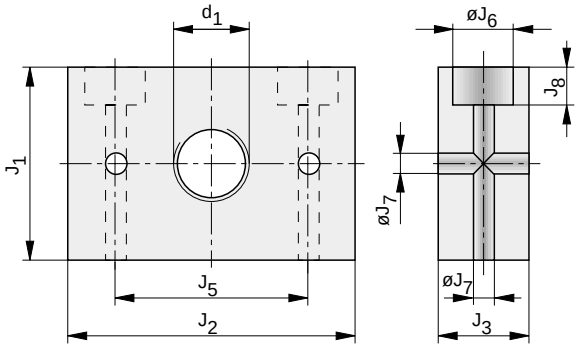

Dimensions (mm) Soft Pad

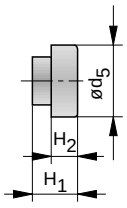

Dimensions Table (mm)

A	B	B_1	C	d_1	$ød_2$	$ød_4$	$ød_5$	F	G	H_1	H_2	J_1	J_2	J_3	J_5	$øJ_6$	$øJ_7$	J_8
66.4	9.7	5.1	45	M12x1	3.3	10.4	10.4	16	4	6.1s	3	25.4	38	12	25.4	8	4.5	5

Order Instructions

Product	Order Instructions	
	Type	**Order No.**
Shock absorber	**SA 12**	**7910**
Soft pad	**SP 12**	**7914**
Additional mounting nut	**LN 12**	**7919**
Universal flange	**UM 12**	**7912**

ORIGA Shock Absorbers

Energy Capacity

Type	Stroke (mm)	Effective Mass (kg)		Max. Energy Capacity (Nm)	
		Min.	Max.	per stroke W_3	per hour W_4
SA 14	12.5	0.9	10	17	34000
SA 14 S	12.5	8.6	86	17	34000
SA 14 S2	12.5	68	205	17	34000

Technical Data

Characteristic		Unit	Comments
Impact velocity		m/s	0.3 - 4.5
Operating temperature range		°C	-40 to +82
Installation			In any position
Force of internal return spring		N	4 - 7
Max. deviation of impacting force from centre axis of shock absorber		±3°	
Weight (mass)		kg	0.125
Min. mounting strength required		N	3400 [1)]
Materials	Body		Steel, black oxide finish
	Piston rod		Steel, hardened, ground, hard-chrome plated
	Accessories		Steel, black oxide finish or aluminium, anodized

[1)] based on $\frac{2.5 \cdot W_3}{\text{stroke}}$

Hydraulic Industrial Shock Absorbers

Type:
- Non-adjustable

Series SA
SA 14
- For smaller effective masses

SA 14 S
- For intermediate effective masses

SA 14 S2
- For larger effective masses

Basic Version with:
- Integral stop collar
- 1 mounting nut

Accessories:
- Soft pad
- Universal Flange

For product group overview see 1.70.001E
For design and installation notes see 1.70.001E

Data Sheet No. 1.70.004E-1

A1P565E00DAA00X

The right to make technical modifications is reserved

Dimensions (mm)

Type: SA 14, SA 14 S, SA 14 S2

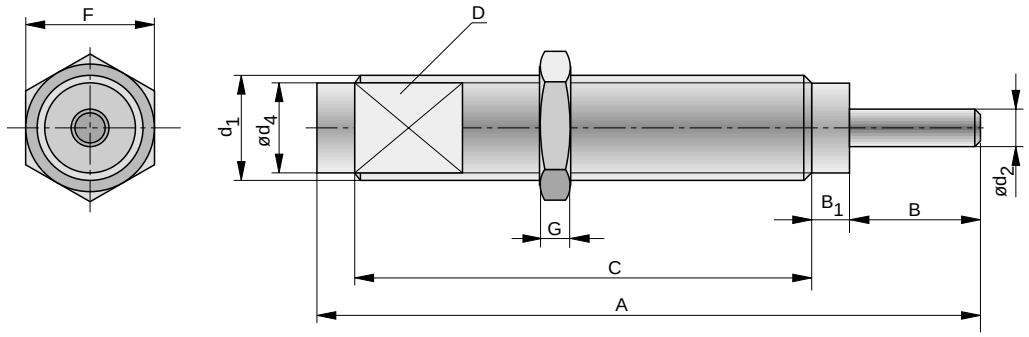

Dimensions (mm) Universal Flange

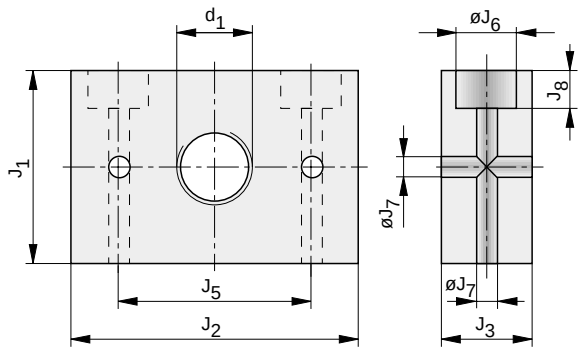

Dimensions (mm) Soft Pad

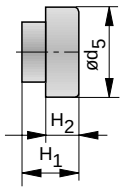

Dimensions table (mm)

A	B	B_1	C	D	d_1	$ød_2$	$ød_4$	$ød_5$	F	G	H_1	H_2	J_1	J_2	J_3	J_5	$øJ_6$	$øJ_7$	J_8
87	12	4	61	12	M14x1.5 [1]	4.8	12	11.9	17	5	10.9	6.9	29	45	16	35	8	4.5	5

[1] Option: M14x1 thread (d_1)

Order Instructions

Product	Order Instructions Type	Order No.
Shock absorber for smaller effective masses	**SA 14**	**7920**
Shock absorber for intermediate effective masses	**SA 14 S**	**7927**
Shock absorber for larger effective masses	**SA 14 S2**	**7928**
Soft pad	**SP 14**	**7924**
Additional mounting nut	**LN 14**	**7929**
Universal flange	**UM 14**	**7922**

ORIGA Shock Absorbers

Hydraulic Industrial Shock Absorbers

Type:
• Non-adjustable

Series SA

– For smaller effective masses
SA 20 – Stroke 12,5 mm
SA 20x25 – Stroke 24,6 mm

– For intermediate effective masses
SA 20 S – Stroke 12,5 mm
SA 20 Sx25 – Stroke 24,6 mm

– For larger effective masses
SA 20 S2 – Stroke 12,5 mm
SA 20 S2x25 – Stroke 24,6 mm

Basic Version with:
• Integral stop collar
• 1 mounting nut

Accessories:
• Soft pad
• Universal flange

Energy Capacity

Type	Stroke (mm)	Effective Mass (kg) Min.	Effective Mass (kg) Max.	Max. Energy Capacity (Nm) per stroke W_3	Max. Energy Capacity (Nm) per hour W_4
SA 20	12.5	2.3	25	25	45000
SA 20 S	12.5	23	230	25	45000
SA 20 S2	12.5	182	910	25	45000
SA 20x25	24.6	2.3	16	50.8	68000
SA 20 Sx25	24.6	9	59	50.8	68000
SA 20 S2x25	24.6	36	227	50.8	68000

Technical Data

Characteristic		Unit	Comments
Impact velocity		m/s	0.3 - 4.5
Operating temperature range		°C	-40 to +82
Installation			In any position
Force of internal return spring		N	6 - 10
Max. deviation of impacting force from centre axis of shock absorber			±3°
Weight (mass)		kg	0.176 (Type SA20), 0.207 (Type SA20x25)
Min. mounting strength required		N	5000 [1)]
Materials	Body		Steel, black oxid e finish
	Piston rod		Steel, hardened, ground, hard-chrome plated
	Accessories		Steel, black oxide finish or aluminium, anodized

[1)] based on $\frac{2.5 \cdot W_3}{\text{stroke}}$

For product group overview see 1.70.001E
For design and installation notes see 1.70.001E

Data Sheet No. 1.70.005E-1

A1P566E00DAA00X

The right to make technical modifications is reserved

HOERBIGER ORIGA

Dimensions (mm)

Type: SA 20, SA 20 S, SA 20 S2

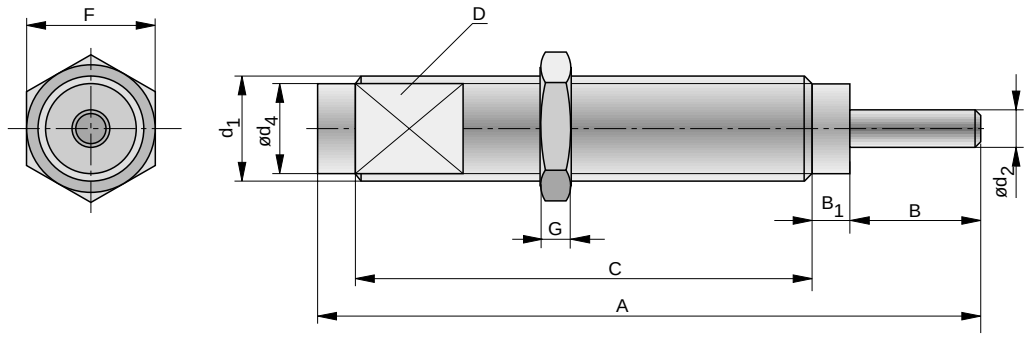

Dimensions (mm) Universal Flange

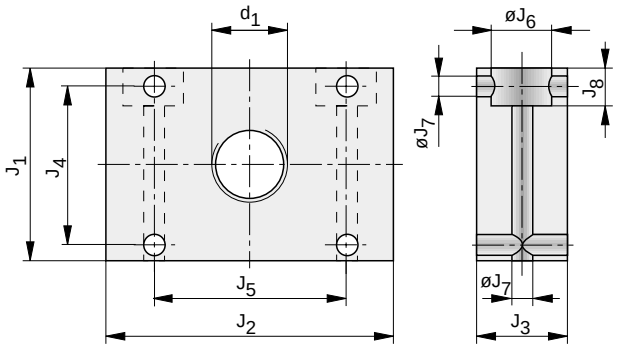

Dimensions (mm) Soft Pad

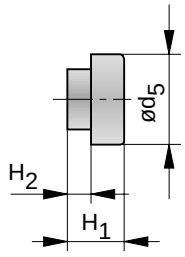

Dimensions Table (mm)

Typ	A	B	B_1	C	D	d_1	$ød_2$	$ød_4$	$ød_5$	F
SA 20	89	12	5.6	61.7	17	M20x1.5	6.4	17	17	23.9
SA 20x25	140.5	24.6	5.6	100.3	17	M20x1.5	6.4	17	17	25.4

Typ	G	H_1	H_2	J_1	J_2	J_3	J_4	J_5	$øJ_6$	$øJ_7$	J_8
SA 20	6	10.7	4.7	35	46	16	25.4	35	10.4	5.5	10.4
SA 20x25	6	10.7	4.7	35	46	16	25.4	35	10.4	5.5	10.4

Order Instructions

Product		Order Instructions Type	Order No.
Shock absorber	– Hub 12.5 mm	**SA 20**	**7930**
– for smaller effective masses	– Hub 24.6 mm	**SA 20x25**	**7700**
Shock absorber	– Hub 12.5 mm	**SA 20 S**	**7937**
– for intermediate effective masses	– Hub 24.6 mm	**SA 20 Sx25**	**7701**
Shock absorber	– Hub 12.5 mm	**SA 20 S2**	**7938**
– for larger effective masses	– Hub 24.6 mm	**SA 20 S2x25**	**7702**
Soft pad		**SP 20**	**7934**
Additional mounting nut		**LN 20**	**7939**
Universal flange		**UM 20**	**7932**

ORIGA Shock Absorbers

Energy Capacity

Type	Stroke (mm)	Effective Mass (kg)		Max. Energy Capacity (Nm)	
		Min.	Max.	per stroke W_3	per hour W_4
SAI 25	25.4	9	136	68	68000
SAI 25 S	25.4	113	1130	68	68000
SAI 25 S2	25.4	400	2273	68	68000

Technical Data

Characteristic		Unit	Comments
Impact velocity		m/s	0.3 - 4.5
Operating temperature range		°C	-40 to +82
Installation			In any position
Force of internal return spring		N	19 - 37
Max. deviation of impacting force from centre axis of shock absorber			±3°
Weight (mass)		kg	0.327
Min. mounting strength required		N	6700 [1)]
Materials	Body		Steel, black oxide finish
	Piston rod		Steel, hardened, ground, hard-chrome plated
	Accessories		Steel, black oxide finish or aluminium, anodized

[1)] based on $\frac{2.5 \cdot W_3}{\text{stroke}}$

Hydraulic Industrial Shock Absorbers

Type:
- Non-adjustable

Series SAI

SAI 25
- For smaller effective masses

SAI 25 S
- For intermediate effective masses

SAI 25 S2
- For larger effective masses

Basic Version with:
- Integral stop collar
- 1 mounting nut

Accessories:
- Soft pad
- Universal flange

For product group overview see 1.70.001E
For design and installation notes see 1.70.001E

Data Sheet No. 1.70.006E-1

A1P567E00DAA00X

The right to make technical modifications is reserved

Dimensions (mm)

Type: SAI 25, SAI 25 S, SAI 25 S2

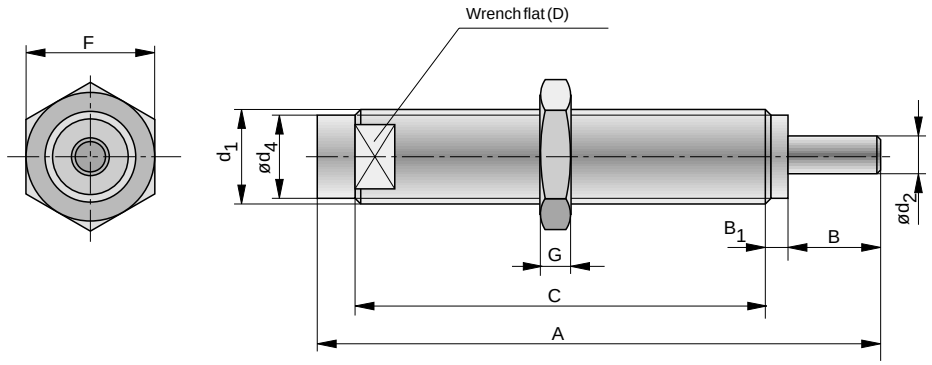

Dimensions (mm) Universal Flange

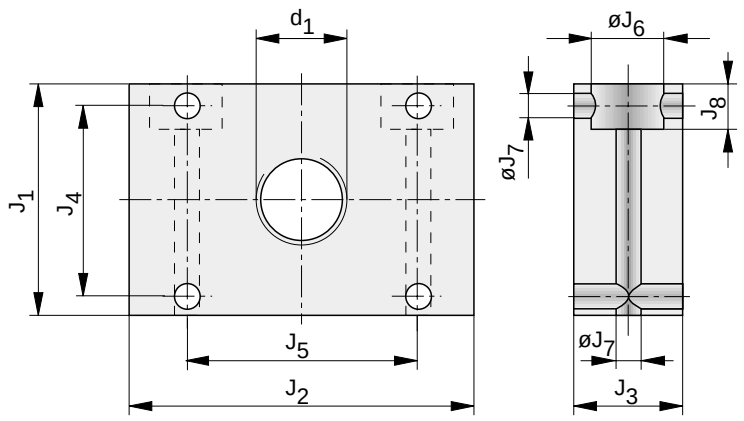

Dimensions (mm) Soft Pad

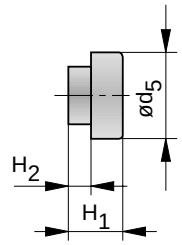

Dimensions Table (mm)

A	B	B_1	C	D	d_1	$ød_2$	$ød_4$	$ød_5$	F	G	H_1	H_2	J_1	J_2	J_3	J_4	J_5	$øJ_6$	$øJ_7$	J_8
149.1	24.6	4.6	107.2	22	M25x1.5	7.9	22.4	22.3	30	8	11	4.7	35	47	16	25.5	35	10.4	5.5	10.4

Order Instructions

Product	Order Instructions Type	Order No.
Shock absorber for smaller effective masses	**SAI 25**	**7834**
Shock absorber for intermediate effective masses	**SAI 25 S**	**7835**
Shock absorber for larger effective masses	**SAI 25 S2**	**7836**
Soft pad	**SP-25**	**7837**
Additional mounting nut	**LN-25**	**7959**
Universal flange	**UM-25**	**7952**

ORIGA Shock Absorbers

Hydraulic Industrial Shock Absorbers

Type:
- Adjustable

Series SA
SA 1/4 x 1/2

Basic Version with:
- Integral stop collar
- 1 mounting nut

Accessories:
- Soft pad
- Universal flange

Energy Capacity

Type	Stroke (mm)	Effective Mass (kg)		Max. Energy Capacity (Nm)	
		Min.	Max.	per stroke W_3	per hour W_4
SA 1/4 x 1/2	12,7	2,3	182	17	23000

Technical Data

Characteristic		Unit	Comments
Impact velocity		m/s	0.3 - 4.5
Operating temperature range		°C	-40 to +82
Installation			In any position
Force of internal return spring		N	6 - 9
Max. deviation of impacting force from centre axis of shock absorber		±3°	
Weight (mass)		kg	0.176
Min. mounting strength required		N	3400 [1)]
Materials	Body		Steel, black oxide finish
	Piston rod		Steel, hardened, ground, hard-chrome plated
	Accessories		Steel, black oxide finish or aluminium, anodized

[1)] based on $\frac{2.5 \cdot W_3}{\text{stroke}}$

For product group overview see 1.70.001E
For design and installation notes see 1.70.001E

Data Sheet No. 1.70.100E-1

A1P568E00DAA00X

The right to make technical modifications is reserved

Dimensions (mm)

Type: SA 1/4 x 1/2

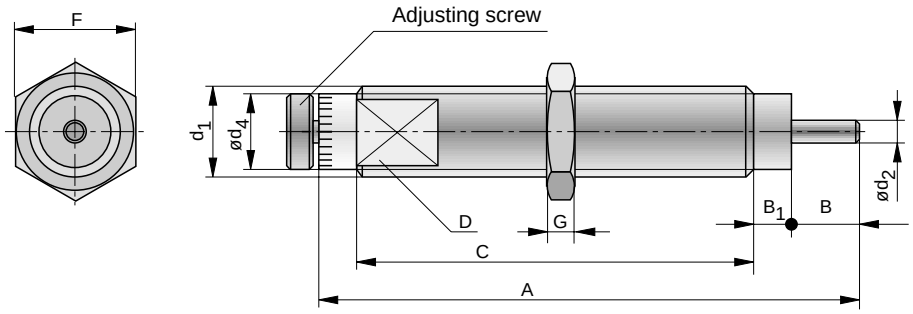

Dimensions (mm) Universal Flange

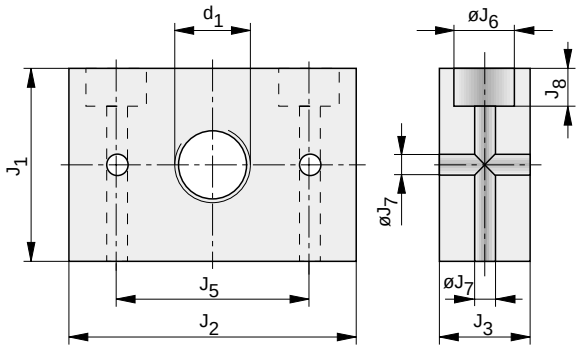

Dimensions (mm) Soft Pad

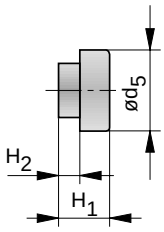

Dimensions Table (mm)

A	B	B_1	C	D	d_1	$ød_2$	$ød_4$	$ød_5$	E	F	G	H_1	H_2	J_1	J_2	J_3	J_4	J_5	$øJ_6$	$øJ_7$	J_8
98.9	12	5.6	61.7	17	M20x1.5	6.4	16.9	17	6.4	24	6	10.7	4.8	35	47	16	25.5	35	10	5.5	10

Order Instructions

Product	Order Instructions	
	Type	**Order No.**
Shock absorber	**SA 1/4 x 1/2**	**7940**
Soft pad	**SP 20**	**7934**
Additional mounting nut	**LN 20**	**7939**
Universal flange	**UM 20**	**7932**

ORIGA Shock Absorbers

Hydraulic Industrial Shock Absorbers

Type:
• Adjustable

Series SA
SA 3/8 x 1D

Basic Version with:
• 1 mounting nut
• Front and rear adjustment

Accessories:
• Stop collar
• Soft pad
• Universal flange

Energy Capacity

Type	Stroke (mm)	Effective Mass (kg)		Max. Energy Capacity (Nm)	
		Min.	Max.	per stroke W_3	per hour W_4
SA 3/8 x 1D	25.4	4.5	546	70	46000

Technical Data

Characteristic		Unit	Comments
Impact velocity		m/s	0.3 - 4.5
Operating temperature range		°C	-40 to +82
Installation			In any position
Force of internal return spring		N	19 - 37
Max. deviation of impacting force from centre axis of shock absorber			±3°
Weight (mass)		kg	0.243
Min. mounting strength required		N	6900 [1)]
Materials	Body		Steel, black oxide finish
	Piston rod		Steel, hardened, ground, hard-chrome plated
	Accessories		Steel, black oxide finish or aluminium, anodized

[1)] based on $\frac{2.5 \cdot W_3}{\text{stroke}}$

For product group overview see 1.70.001E
For design and installation notes see 1.70.001E

A1P569E00DAA00X

The right to make technical modifications is reserved

Dimensions (mm)

Type: SA 3/8 x 1D

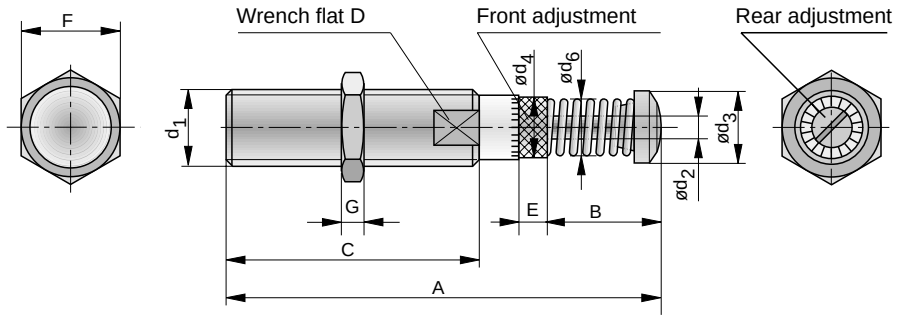

Dimensions (mm) Universal Flange

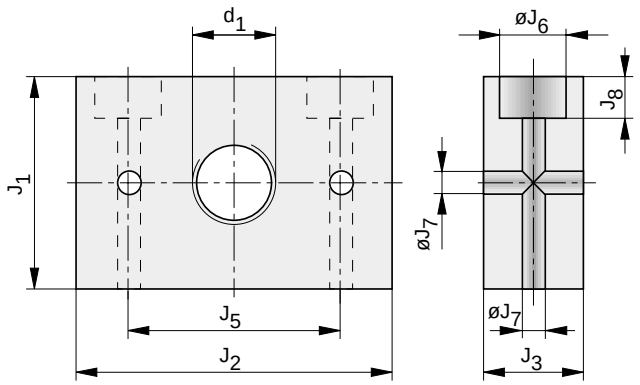

Dimensions (mm) Soft Pad

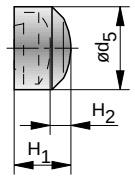

Dimensions (mm) Stop Collar

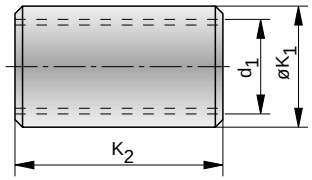

Dimensions Table (mm)

A	B	C	D	d_1	$ød_2$	$ød_3$	$ød_4$	$ød_5$	$ød_6$	E	F	G	H_1	H_2	J_1	J_2	J_3	J_4	J_5	$øJ_6$	$øJ_7$	J_8	$øK_1$	K_2
121.2	35.5	61.5	22	M25x1.5 [2]	7.9	19.9	22.7	22.1	18.5	12.7	30	8	12.2	6.4	35	47	16	25.5	35	10	5.5	10	31.8	55.6

[2] Option: M27x3 thread (d_1)

Order Instructions

Product	Order Instructions Type	Order No.
Shock absorber	**SA 3/8 x 1D**	**7840**
Stop collar	**SC 25 B**	**7951**
Soft pad	**SP 25**	**7954**
Additional mounting nut	**LN 25**	**7959**
Universal flange	**UM 25**	**7952**

ORIGA Shock Absorbers

Hydraulic Industrial Shock Absorbers

Type:
• Adjustable

Series SALD
SALD 1/2 x 1M
- Stroke: 25.4 mm

SALD 1/2 x 2M
- Stroke 50.8 mm

Basic Version with:
• Integral stop collar
• 1 mounting nut

Accessories:
• Rectangular flange

Energy Capacity

Type	Stroke (mm)	Effective Mass (kg)		Max. Energy Capacity (Nm)	
		Min.	Max.	per stroke W_3	per hour W_4
SALD 1/2 x 1M	25.4	4.5	1134	136	85000
SALD 1/2 x 2M	50.8	9.5	2268	271	98000

Technical Data

Characteristic		Unit	Comments
Impact velocity		m/s	0.3 - 4.5
Arbeitstemperatur		°C	-40 bis +82
Installation			In any position
Force of return spring Type: SALD 1/2 x 1M Type: SALD 1/2 x 2M		 N N	 36 - 82 36 - 128
Max. deviation of impacting force from centre axis of shock absorber			±3°
Weight (mass) Type: SALD 1/2 x 1M Type: SALD 1/2 x 2M		 kg kg	 0.751 0.922
Min. mounting strength required		N	13400 [1)]
Materials	Body		Steel, black oxide finish
	Piston rod		Steel, hardened, ground, hard-chrome plated
	Accessories		Steel, black oxide finish or aluminium, anodized

[1)] based on $\frac{2.5 \cdot W_3}{\text{stroke}}$

For product group overview see 1.70.001E
For design and installation notes see 1.70.001E

A1P570E00DAA00X

The right to make technical modifications is reserved

HOERBIGER ORIGA

Dimensions (mm)

Type: SALD 1/2 x 1M, SALD 1/2 x 2M

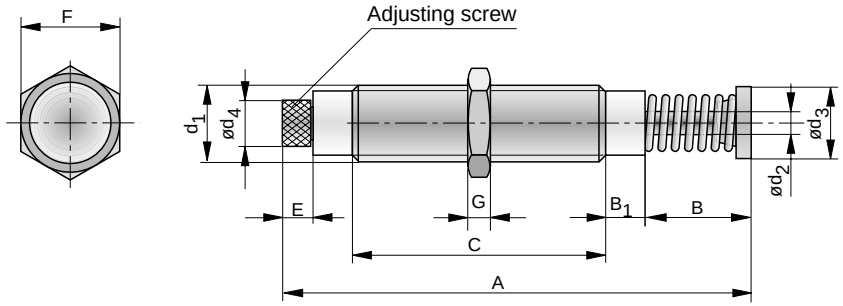

Dimensions (mm) Rectangular Flange

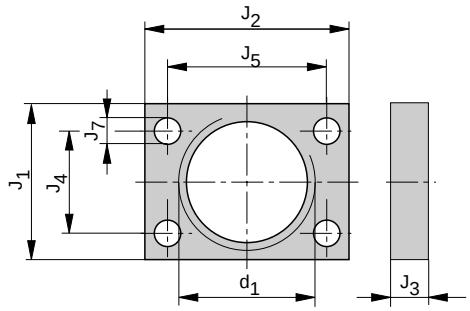

Dimensions Table (mm)

Type	A	B	B_1	C	d_1	$ød_2$	$ød_3$	$ød_4$	E	F	G	J_1	J_2	J_3	J_4	J_5	J_7
SALD 1/2 x 1M	165.1	23.8	6	110	M36x1.5	9.5	25.4	22.5	14.7	41.3	6.7	41	54	9.5	28	42	7
SALD 1/2 x 2M	215.9	49.2	6	134	M36x1.5	9.5	25.4	22.5	14.7	41.3	6.7	41	54	9.5	28	42	7

Order Instructions

Product	Order Instructions Type	Order No.
Shock absorber, stroke 25.4 mm	**SALD 1/2 x 1M**	**7841**
Shock absorber, stroke 50.8 mm	**SALD 1/2 x 2M**	**7842**
Rectangular flange	**RF 1/2-M**	**7843**
Additional mounting nut	**LN 1/2-M**	**7838**

ORIGA Shock Absorbers

Hydraulic Industrial Shock Absorbers

Type:
• Adjustable

Series SA
SA 1/2 x 1
- Stroke: 25.4 mm

SA 1/2 x 2
- Stroke 50.8 mm

Basic Version with:
• 1 mounting nut

Accessories:
• Stop collar
• Rectangular flange
• Soft pad
• Foot mounting

Energy Capacity

Type	Stroke (mm)	Effective Mass (kg)		Max. Energy Capacity (Nm)	
		Min.	Max.	per stroke W_3	per hour W_4
SA 1/2 x 1	25.4	4.5	545	130	86000
SA 1/2 x 2	50.8	9.5	950	270	100000

Technical Data

Characteristic		Unit	Comments
Impact velocity		m/s	0.3 - 4.5
Operating temperature range		°C	-40 to +82
Installation			In any position
Force of return spring		N N	36 - 82 (Type SA 1/2x1) 36 - 128 (Type SA 1/2x2)
Max. deviation of impacting force from centre axis of shock absorber			±5°
Weight (mass)		kg kg	0.627 (Type SA 1/2x1) 0.8 (Type SA 1/2x2)
Min. mounting strength required		N	13300 [1]
Materials	Body		Steel, black oxide finished
	Piston rod		Steel, hardened, ground, hard-chrome plated
	Accessories		Steel, black oxide finish or aluminium, anodized

[1] based on $\frac{2.5 \cdot W_3}{\text{stroke}}$

For product group overview see 1.70.001E
For design and installation notes see 1.70.001E

Data Sheet No. 1.70.103E-1

A1P571E00DAA00X

The right to make technical modifications is reserved

HOERBIGER ORIGA

Dimensions (mm)

Type: SA 1/2 x 1, SA 1/2 x 2

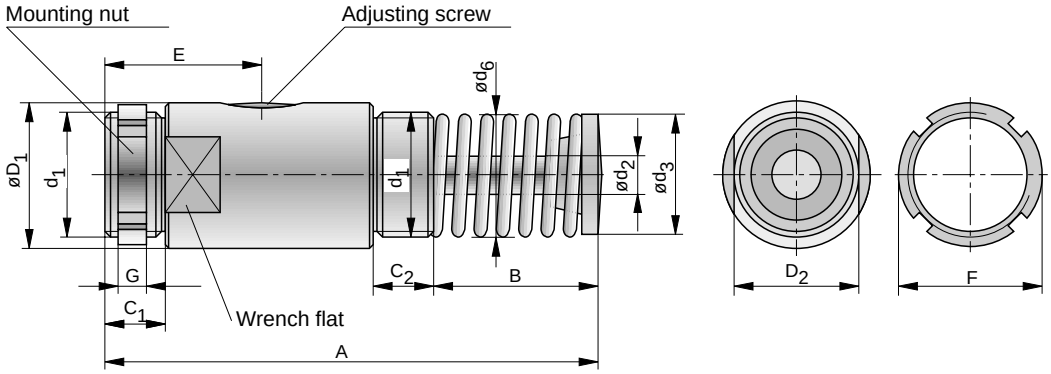

Dimensions (mm) Rectangular Flange

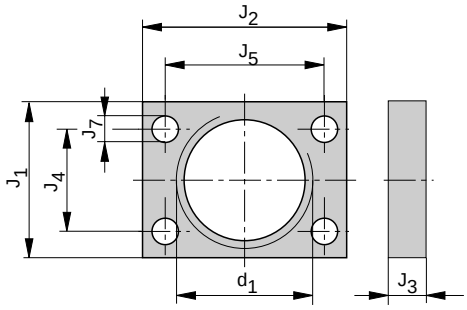

Dimensions (mm) Soft Pad

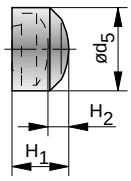

Note:
Cannot be used with stop collar

Dimensions (mm) Foot mounting

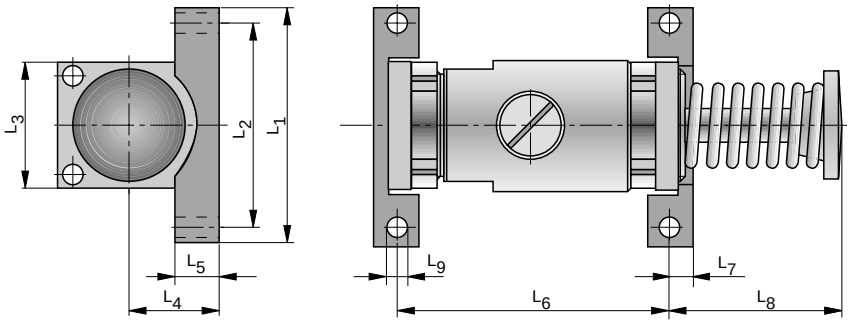

Dimensions (mm) Stop collar

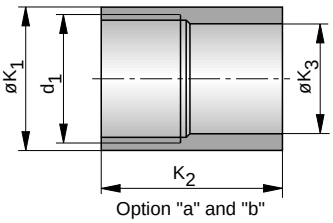

Option "a" - for rear mounting
Option "b" - for front mounting

Dimensions Table (mm)

Type	A	B	C_1	C_2	$øD_1$	D_2	d_1	$ød_2$	$ød_3$	$ød_5$	$ød_6$	E	F	G	H_1	H_2	J_1	J_2
SA 1/2 x 1	138.1	55.5	16	16	38	35	M33x1.5	9.5	25.4	31.8	25.4	41.3	38	6.4	19.1	11.2	41	54
SA 1/2 x 2	189	81	16	16	38	35	M36x1.5	9.5	25.4	31.8	25.4	41.3	38	6.4	19.1	11.2	41	54

Type	J_3	J_4	J_5	J_7	$øK_1$	K_2a	K_2b	$øK_3$	L_1	L_2	L_3	L_4	L_5	L_6	L_7	L_8	L_9
SA 1/2 x 1	9.5	28	42	7	38.1	47.6	41.3	28.6	69.9	60.3	54	27	12.7	95.3	6.4	49.2	6
SA 1/2 x 2	9.5	28	42	7	38.1	47.6	41.3	28.6	69.9	60.3	54	27	12.7	120.7	6.4	74.6	6

Order Instructions

Product	Order Instructions	
	Type	**Order No.**
Shock absorber, stroke 25.4 mm	**SA 1/2 x 1**	**7970**
Shock absorber, stroke 50.8 mm	**SA 1/2 x 2**	**7975**
Soft Pad	**SP 1/2**	**7974**
Stop collar option a – for rear mounting	**SC 1/2A**	**7971**
Stop collar option b – for front mounting	**SC 1/2B**	**7977**
Rectangular flange	**RF 1/2**	**7972**
Foot mounting	**FM 1/2**	**7973**
Additional mounting nut	**LN 1/2**	**7979**

ORIGA Shock Absorbers

Hydraulic Industrial Shock Absorbers

Type:
• Adjustable

Series SA
SA 3/4 x 1
- Stroke: 25.4 mm

SA 3/4 x 2
- Stroke: 50.8 mm

SA 3/4 x 3
-Stroke: 76 mm

Basic Version with:
• 1 mounting nut

Accessories:
• Stop collar
• Rectangular flange
• Square flange
• Soft pad
• Foot mounting

Energy Capacity

Type	Stroke (mm)	Effective Mass (kg)		Max. Energy Capacity (Nm)	
		Min.	Max.	per stroke W_3	per hour W_4
SA 3/4 x 1	25.4	27	3600	290	126500
SA 3/4 x 2	50.8	43	6350	600	150000
SA 3/4 x 3	76	55	9500	890	184000

Technical Data

Characteristic		Unit	Comments
Impact velocity		m/s	0.3 - 4.5
Operating temperature range		°C	-40 to +82
Installation			In any position
Force of return spring Type: SA 3/4 x 1 Type: SA 3/4 x 2 Type: SA 3/4 x 3		 N N N	 68 - 92 44 - 92 33 - 105
Max. deviation of impacting force from centre axis of shock absorber			±3°
Weight (mass) Type: SA 3/4 x 1 Type: SA 3/4 x 2 Type: SA 3/4 x 3		 kg kg kg	 1.44 1.8 2.24
Min. mounting strength required		N	29600 [1]
Materials	Body		Steel, black oxide finish
	Piston rod		Steel, hardened, ground, hard-chrome plated
	Accessories		Steel, black oxide finish or aluminium, anodized

[1] based on $\frac{2,5 \cdot W_3}{\text{stroke}}$

For product group overview see 1.70.001E
For design and installation notes see 1.70.001E

Data Sheet No. 1.70.104E-1

A1P572E00DAA00X

The right to make technical modifications is reserved

Dimensions (mm)

Type: SA 3/4 x 1, SA 3/4 x 2, SA 3/4 x 3

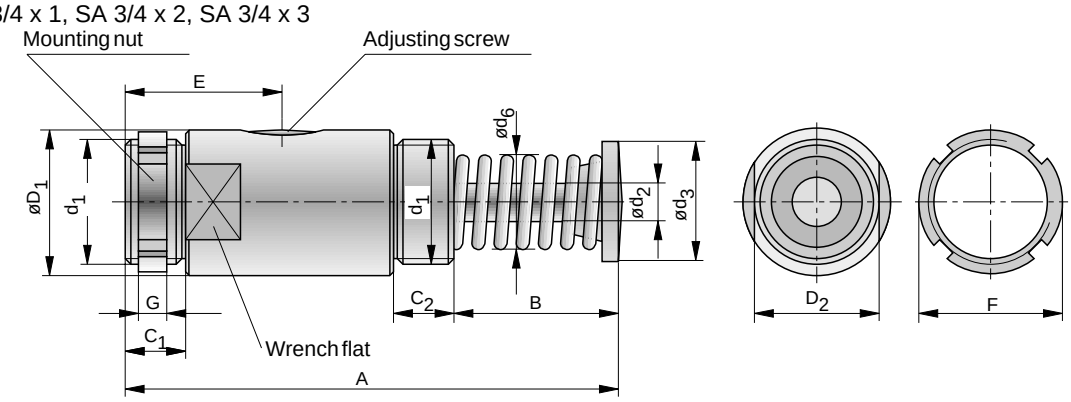

Dimensions (mm) Rectangular flange

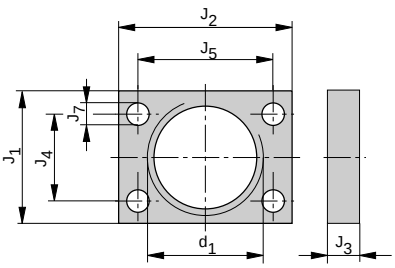

Dimensions (mm) Square Flange

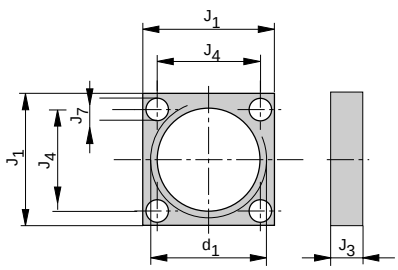

Dimensions (mm) Soft Pad

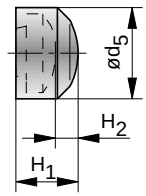

Note:
Cannot be used with stop collar

Dimensions (mm) Foot Mounting

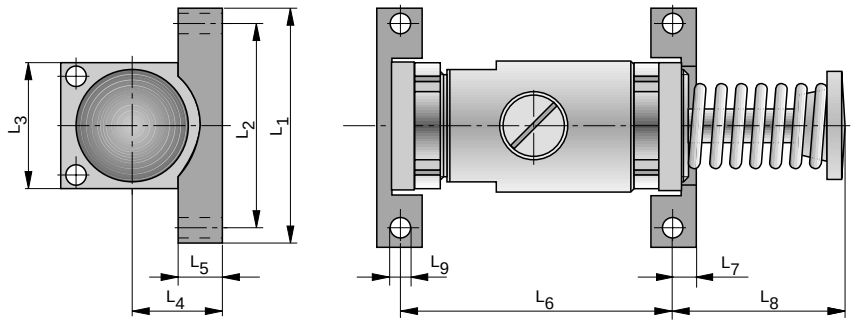

Dimensions (mm) Stop Collar

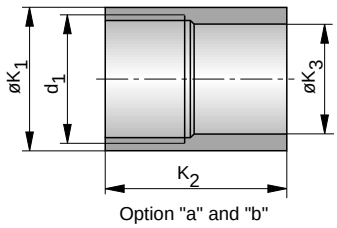

Option "a" - for rear mounting
Option "b" - for front mounting

Dimensions Table (mm)

Type	A	B	C_1	C_2	$øD_1$	D_2	d_1	$ød_2$	$ød_3$	$ød_5$	$ød_6$	E	F	G	H_1	H_2	J_1	J_2
SA 3/4 x 1	144.4	50	22.9	23	57.2	50	M42x1.5	14.3	38	44.5	34.7	47.2	57.2	9.5	25.4	17.5	57.2	76.2
SA 3/4 x 2	195.2	75.4	22.9	23	57.2	50	M42x1.5	14.3	38	44.5	34.7	59.5	57.2	9.5	25.4	17.5	57.2	76.2
SA 3/4 x 3	246	100.8	22.9	23	57.2	50	M42x1.5	14.3	38	44.5	38.1	72.6	57.2	9.5	25.4	17.5	57.2	76.2

Type	J_3	J_4	J_5	J_7	$øK_1$	K_2a	K_2b	$øK_3$	L_1	L_2	L_3	L_4	L_5	L_6	L_7	L_8	L_9
SA 3/4 x 1	12.7	41.3	60.3	8.7	57.2	49.2	39.7	41.2	95.3	76.2	57.2	28.6	14.3	85.7	9.5	52.3	8.7
SA 3/4 x 2	12.7	41.3	60.3	8.7	57.2	49.2	39.7	41.2	95.3	76.2	57.2	28.6	14.3	111.1	9.5	77.6	8.7
SA 3/4 x 3	12.7	41.3	60.3	8.7	57.2	49.2	39.7	41.2	95.3	76.2	57.2	28.6	14.3	136.5	9.5	103.2	8.7

Order Instructions

Product	Order Instructions	
	Type	**Order No.**
Shock absorber, stroke 25.4 mm	**SA 3/4 x 1**	**7980**
Shock absorber, stroke 50.8 mm	**SA 3/4 x 2**	**7985**
Shock absorber, stroke 76 mm	**SA 3/4 x 3**	**7986**
Soft pad	**SP 3/4**	**7984**
Stop collar option a – for rear mounting	**SC 3/4 A**	**7981**
Stop collar option b – for front mounting	**SA 3/4 B**	**7987**
Rectangular flange	**RF 3/4**	**7982**
Square flange	**SF 3/4**	**7988**
Foot mounting	**FM 3/4**	**7983**
Additional mounting nut	**LN 3/4**	**7989**

ORIGA Shock Absorbers

Hydraulic Industrial Shock Absorbers

Type:
• Adjustable

Series SA
SA 1-1/8 x 2
- Stroke: 50.8 mm

SA 1-1/8 x 4
- Stroke: 102 mm

SA 1-1/8 x 6
- Stroke: 152 mm

Basic Version with:
• 1 mounting nut

Accessories:
• Stop collar
• Square flange
• Soft pad
• Foot mounting

Energy Capacity

Type	Stroke (mm)	Effective Mass (kg)		Max. Energy Capacity (Nm)	
		Min.	Max.	per stroke W_3	per hour W_4
SA 1-1/8 x 2	50.8	72	13000	1380	172600
SA 1-1/8 x 4	102	118	18200	2700	230000
SA 1-1/8 x 6	152	200	32000	4150	288000

Technical Data

Characteristic		Unit	Comments
Impact velocity		m/s	0.3 - 4.5
Operating temperature range		°C	-40 to +82
Installation			In any position
Force of return spring Type: SA 1-1/8 x 2 Type: SA 1-1/8 x 4 Type: SA 1-1/8 x 6		 N N N	 80 - 151 80 - 200 80 - 187
Max. deviation of impacting force from centre axis of shock absorber		±5°	
Weight (mass) Type: SA 1-1/8 x 2 Type: SA 1-1/8 x 4 Type: SA 1-1/8 x 6		 kg kg kg	 3.719 5.035 6.622
Min.mounting strength required		N	68000 [1]
Materials	Body		Steel, black oxide finish
	Piston rod		Steel, hardened, ground, hard-chrome plated
	Accessories		Steel, black oxide finish or aluminium, anodized

[1] based on $\frac{2.5 \cdot W_3}{\text{stroke}}$

For product group overview see 1.70.001E
For design and installation notes see 1.70.001E

Data Sheet No.1.70.105E-1

A1P573D00KX00X

The right to make technical modifications is reserved

HOERBIGER ORIGA

Dimensions (mm)

Type: SA 1-1/8 x 2, SA 1-1/8 x 4, SA 1-1/8 x 6

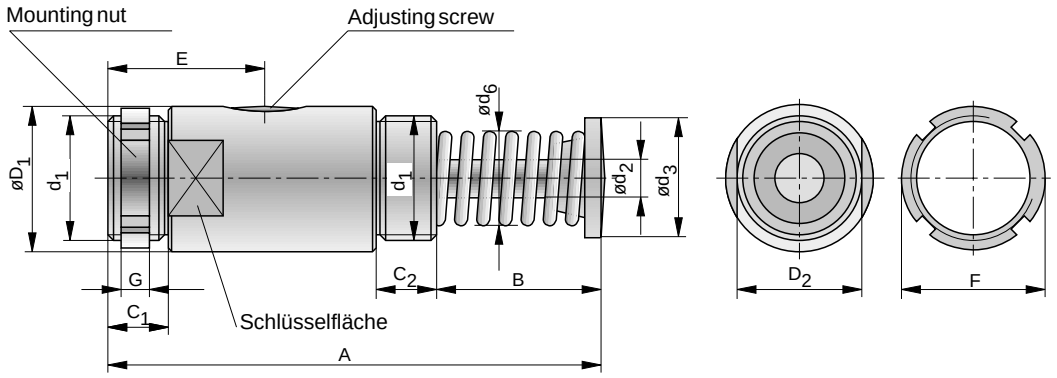

Dimensions (mm) Square Flange

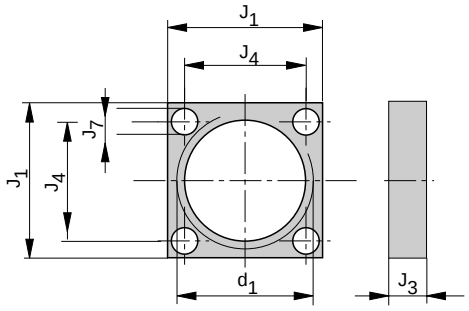

Dimensions (mm) Soft Pad

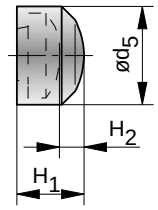

Note:
Cannot be used with stop collar

Dimensions (mm) Foot Mounting

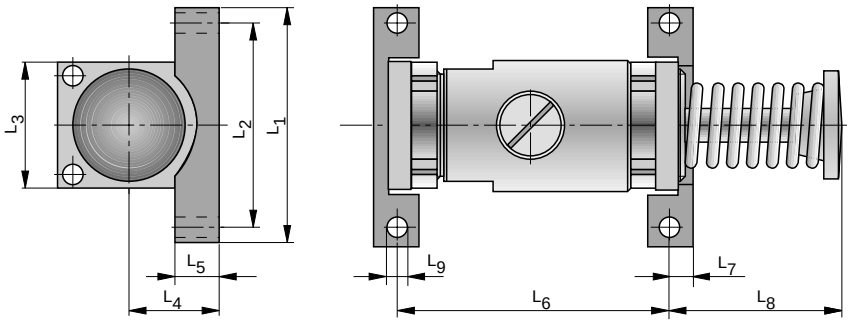

Dimensions (mm) Stop Collar

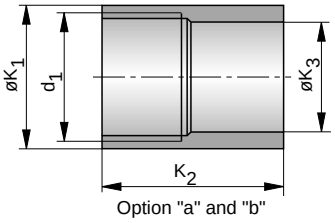

Option "a" - for rear mounting
Option "b" - for front mounting

Dimensions Table (mm)

Type	A	B	C_1	C_2	$øD_1$	D_2	d_1	$ød_2$	$ød_3$	$ød_5$	$ød_6$	E	F	G	H_1	H_2	J_1
SA 1-1/8 x 2	225.6	85.9	26.2	26.2	76.2	69.9	M64x2	20.6	50.8	57.2	47.9	69.9	76.2	9.5	25.4	17.5	88.9
SA 1-1/8 x 4	327.2	136.7	26.2	26.2	76.2	69.9	M64x2	20.6	50.8	57.2	50.8	95.3	76.2	9.5	25.4	17.5	88.9
SA 1-1/8 x 6	450.9	209.6	26.2	26.2	76.2	69.9	M64x2	20.6	50.8	57.2	48.3	120.7	76.2	9.5	25.4	17.5	88.9

Type	J_3	J_4	J_7	$øK_1$	K_2a	K_2b	$øK_3$	L_1	L_2	L_3	L_4	L_5	L_6	L_7	L_8	L_9
SA 1-1/8 x 2	15.9	69.9	10.3	76.2	62.7	50	60.3	142.9	123.8	88.9	44.5	19	127	14.3	90.5	10.3
SA 1-1/8 x 4	15.9	69.9	10.3	76.2	62.7	50	60.3	142.9	123.8	88.9	44.5	19	177.8	14.3	141.3	10.3
SA 1-1/8 x 6	15.9	69.9	10.3	76.2	84.9	72.2	60.3	142.9	123.8	88.9	44.5	19	228.5	14.3	214.3	10.3

Order Instructions		
Product	Order Instructions Type	Order No.
Shock absorber, stroke 50.8 mm	**SA 1-1/8 x 2**	**7990**
Shock absorber, stroke 102 mm	**SA 1-1/8 x 4**	**7995**
Shock absorber, stroke 152 mm	**SA 1-1/8 x 6**	**7996**
Soft pad	**SP 1-1/8**	**7994**
Square flange	**SF 1-1/8**	**7998**
Foot mounting	**FM 1-1/8**	**7993**
Additional mounting nut	**LN 1-1/8**	**7999**
Stop collar option a – for SA 1-1/8 x 2, SA 1-1/8 x 4	**SC 1-1/8 A**	**7991**
Stop collar option b – für SA 1-1/8 x 2, SA 1-1/8 x 4	**SC 1-1/8 B**	**7997**
Stop collar option a – for SA 1-1/8 x 6	**SC 1-1/8 A**	**7891**
Stop collar option b – for SA 1-1/8 x 6	**SC 1-1/8 B**	**7897**

ORIGA Shock Absorbers

Energy Capacity

Type	Stroke (mm)	Effective Mass (kg)		Max. Energy Capacity (Nm)	
		Min.	Max.	per stroke W_3	per hour W_4
SA-A 3/4 x 1	25.4	27	3600	290	184000
SA-A 3/4 x 2	50.8	43	6350	600	230000
SA-A 3/4 x 3	76	55	9500	890	276000

Technical Data

Characteristic		Unit	Comments
Impact velocity		m/s	0.3 - 4.5
Operating temperature range		°C	-40 to +82
Installation			In any position
Max. deviation of impacting force from centre axis of shock absorber			±5°
Weight (mass) Type: SA-A 3/4 x 1 Type: SA-A 3/4 x 2 Type: SA-A 3/4 x 3		 kg kg kg	 1.43 1.79 2.23
Min. mounting strength required		N	29600 [1]
Materials	Body		Steel, black oxide finish
	Piston rod		Steel, hardened, ground, hard-chrome plated
	Accessories		Steel, black oxide finish or aluminium, anodized Air-oil tank: Acrylic, aluminium

[1] based on $\frac{2.5 \cdot W_3}{\text{stroke}}$

Hydraulic Industrial Shock Absorbers

Type:
- Adjustable, without return spring, for use with external air-oil tank

Series SA-A
SA-A 3/4 x 1
- Stroke: 25.4 mm

SA-A 3/4 x 2
- Stroke: 50.8 mm

SA-A 3/4 x 3
- Stroke: 76 mm

Basic Version with:
- 1 mounting nut

Accessories:
- Air-oil tank, Type AOT-1
- Stop collar
- Rectangular flange
- Square flange
- Soft pad
- Foot mounting

For product group overview see 1.70.001E
For design and installation notes see 1.70.001E

A1P574E00DAA00X

The right to make technical modifications is reserved

Dimensions (mm) – Shock Absorber for Connection to Air-Oil Tank

Type: SA-A 3/4 x 1, SA-A 3/4 x 2, SA-A 3/4 x 3

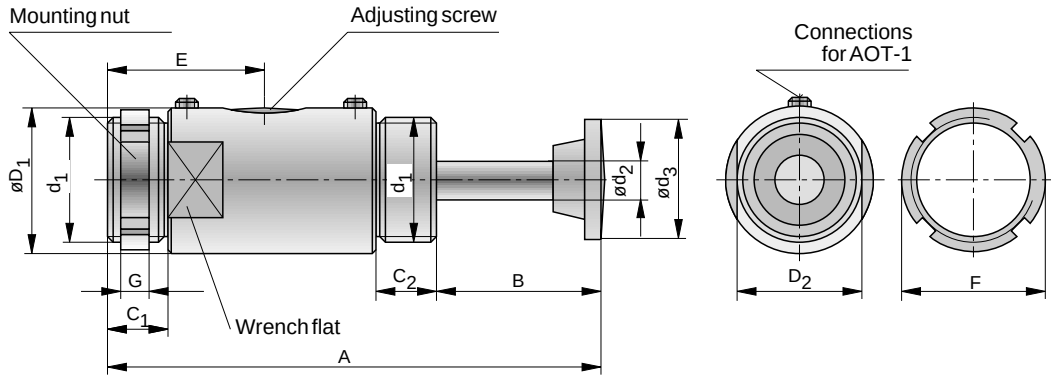

Dimensions (mm) Rectangular flange

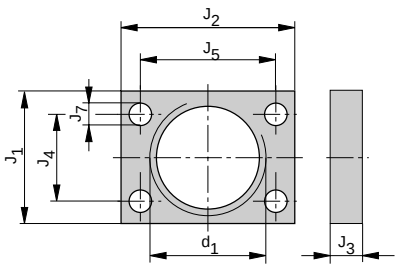

Dimensions (mm) Square flange

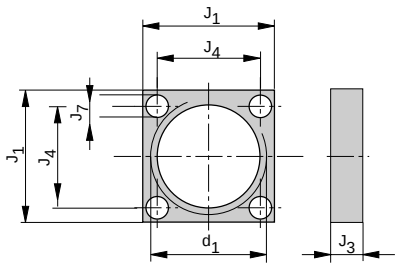

Dimensions (mm) Soft Pad

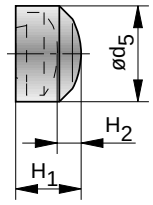

Note:
Cannot be used with stop collar

Dimensions (mm) Foot Mounting

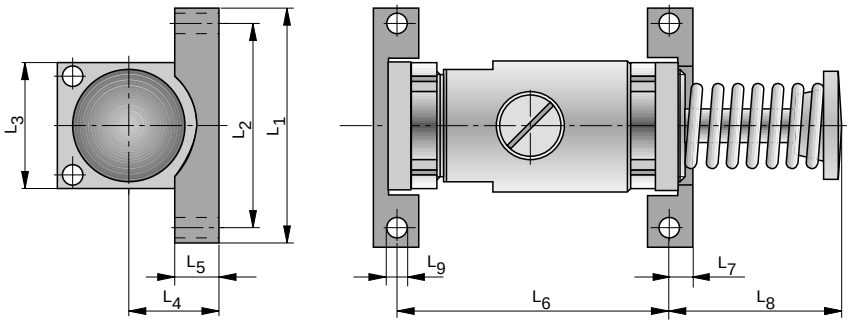

Dimensions (mm) Stop Collar

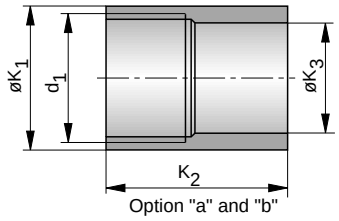

Option "a" - for rear mounting
Option "b" - for front mounting

Dimensions Table (mm)

Type	A	B	C_1	C_2	$øD_1$	D_2	d_1	$ød_2$	$ød_3$	$ød_5$	E	F	G	H_1	H_2	J_1	J_2
SA-A 3/4 x 1	144.4	50	22.9	23	57.2	50	M42x1.5	14.3	38	44.5	47.2	57.2	9.5	25.4	17.5	57.2	76.2
SA-A 3/4 x 2	195.2	75.4	22.9	23	57.2	50	M42x1.5	14.3	38	44.5	59.5	57.2	9.5	25.4	17.5	57.2	76.2
SA-A 3/4 x 3	246	100.8	22.9	23	57.2	50	M42x1.5	14.3	38	44.5	72.6	57.2	9.5	25.4	17.5	57.2	76.2

Type	J_3	J_4	J_5	J_7	$øK_1$	K_2a	K_2b	$øK_3$	L_1	L_2	L_3	L_4	L_5	L_6	L_7	L_8	L_9
SA-A 3/4 x 1	12.7	41.3	60.3	8.7	57.2	49.2	39.7	41.2	95.3	76.2	57.2	28.6	14.3	85.7	9.5	52.3	8.7
SA-A 3/4 x 2	12.7	41.3	60.3	8.7	57.2	49.2	39.7	41.2	95.3	76.2	57.2	28.6	14.3	111.1	9.5	77.6	8.7
SA-A 3/4 x 3	12.7	41.3	60.3	8.7	57.2	49.2	39.7	41.2	95.3	76.2	57.2	28.6	14.3	136.5	9.5	103.2	8.7

Dimensions (mm) – Air-Oil Tank Type AOT-1

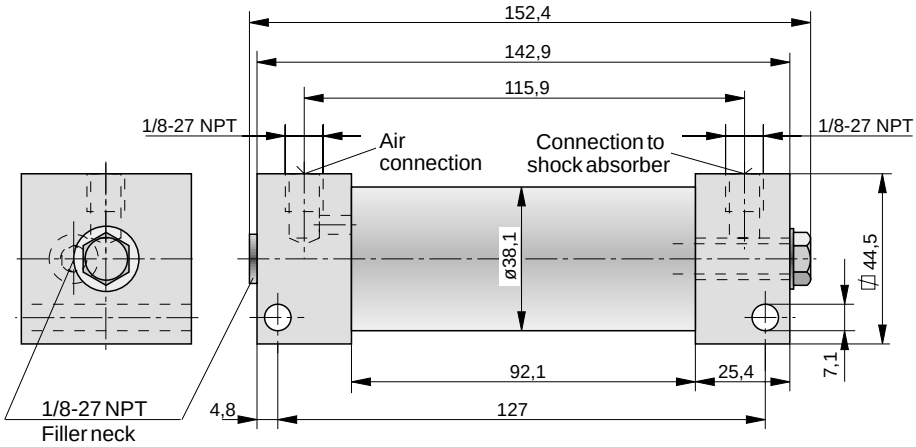

Order Instructions

Product	Order Instructions Type	Order No.
Shock absorber, stroke 25.4 mm	**SA-A 3/4 x 1**	**7887**
Shock absorber, stroke 50.8 mm	**SA-A 3/4 x 2**	**7888**
Shock absorber, stroke 76 mm	**SA-A 3/4 x 3**	**7889**
Soft pad	**SP-3/4**	**7984**
Square flange	**SF-3/4**	**7988**
Rectangular flange	**RF-3/4**	**7982**
Foot mounting	**FM-3/4**	**7983**
Additional mounting nut	**LN-3/4**	**7989**
Stop collar option a – for SA-A 3/4 x 1, SA-A 3/4 x 2, SA-A 3/4 x 3	**SC-A 3/4**	**7981**
Stop collar option b – for SA-A 3/4 x 1, SA-A 3/4 x 2, SA-A 3/4 x 3	**SC-B 3/4**	**7987**
Air-oil tank	**AOT-1**	**7898**

ORIGA Shock Absorbers

Energy Capacity

Type	Stroke (mm)	Effective Mass (kg)		Max. Energy Capacity (Nm)	
		Min.	Max.	per stroke W_3	per hour W_4
SA-A 1-1/8 x 2	50.8	72	13000	1380	345000
SA-A 1-1/8 x 4	102	118	18200	2700	460000
SA-A 1-1/8 x 6	152	200	32000	4150	575000

Technical Data

Characteristic		Unit	Comments
Impact Velocity		m/s	0.3 - 4.5
Operating temperature range		°C	-40 to +82
Installation			In any position
Max. deviation of impacting force from centre axis of shock absorber			±5°
Weight (mass) Type: SA-A 1-1/8 x 2 Type: SA-A 1-1/8 x 4 Type: SA-A 1-1/8 x 6		 kg kg kg	 3.709 5.025 6.612
Min. mounting strength required		N	68000 [1]
Materials	Body		Steel, black oxide finish
	Piston rod		Steel, hardened, ground, hard-chrome plated
	Accessories		Steel, black oxide finish or aluminium, anodized Air-oil tank: high-tensile steel

[1] based on $\frac{2.5 \cdot W_3}{\text{stroke}}$

Hydraulic Industrial Shock Absorbers

Type:
- Adjustable, without return spring, for use with external air-oil tank

Series SA-A
SA-A 1-1/8 x 2
- Stroke: 50.8 mm

SA-A 1-1/8 x 4
- Stroke: 102 mm

SA-A 1-1/8 x 6
- Stroke: 152 mm

Basic Version with:
- 1 mounting nut

Accessories:
- Air-oil tank, Type AOT-3
- Stop collar
- Square flange
- Soft pad
- Foot mounting

For product group overview see 1.70.001E
For design and installation notes see 1.70.001E

Data Sheet No. 1.70.107E-1

A1P575E00DAA00X

The right to make technical modifications is reserved

HOERBIGER ORIGA

Dimensions (mm) – Shock Absorber

Type: SA-A 1-1/8 x 2, SA-A 1-1/8 x 4, SA-A 1-1/8 x 6

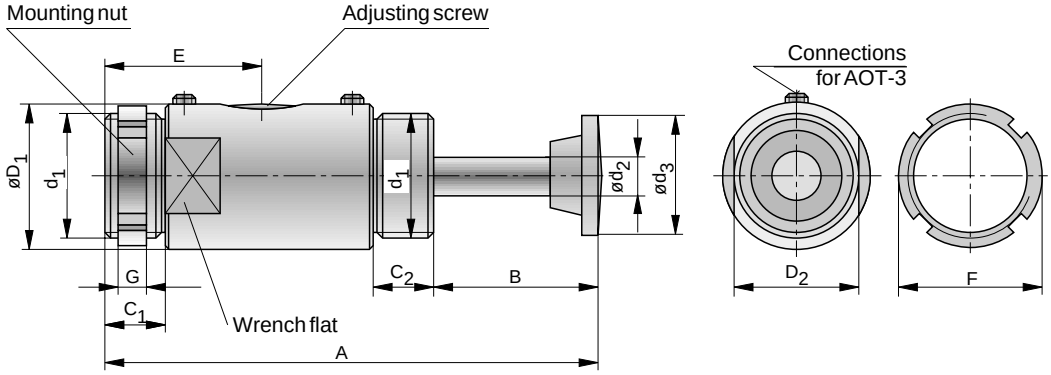

Dimensions (mm) Square Flange

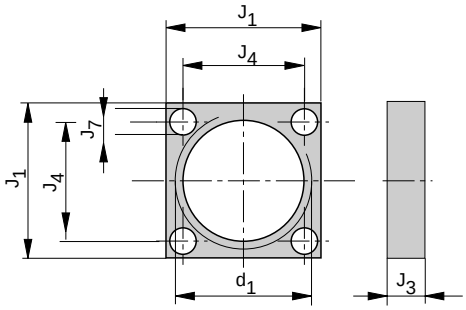

Dimensions (mm) Soft Pad

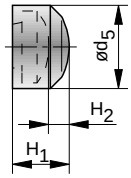

Note:
Cannot be used with stop collar

Dimensions (mm) Foot Mounting

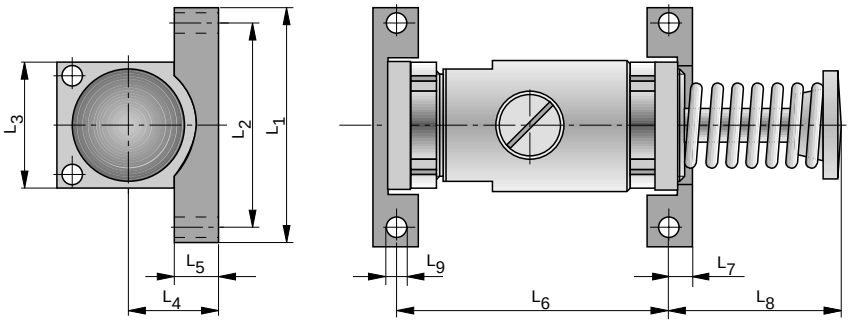

Dimensions (mm) Stop Collar

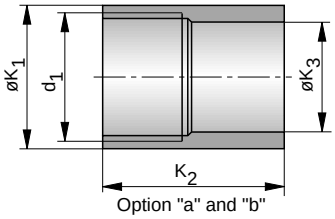

Option "a" - for rear mounting
Option "b" - for front mounting

Dimensions Table (mm)

Type	A	B	C_1	C_2	øD_1	D_2	d_1	ød_2	ød_3	ød_5	E	F	G	H_1	H_2	J_1
SA-A 1-1/8 x 2	225.6	85.9	26.2	26.2	76.2	69.9	M64x2	20.6	50.8	57.2	69.9	76.2	9.5	25.4	17.5	88.9
SA-A 1-1/8 x 4	327.2	136.7	26.2	26.2	76.2	69.9	M64x2	20.6	50.8	57.2	95.3	76.2	9.5	25.4	17.5	88.9
SA-A 1-1/8 x 6	450.9	209.6	26.2	26.2	76.2	69.9	M64x2	20.6	50.8	57.2	120.7	76.2	9.5	25.4	17.5	88.9

Type	J_3	J_4	J_7	øK_1	K_2a	K_2b	øK_3	L_1	L_2	L_3	L_4	L_5	L_6	L_7	L_8	L_9
SA-A 1-1/8 x 2	15.9	69.9	10.3	76.2	62.7	50	60.3	142.9	123.8	88.9	44.5	19	127	14.3	90.5	10.3
SA-A 1-1/8 x 4	15.9	69.9	10.3	76.2	62.7	50	60.3	142.9	123.8	88.9	44.5	19	177.8	14.3	141.3	10.3
SA-A 1-1/8 x 6	15.9	69.9	10.3	76.2	84.9	72.2	60.3	142.9	123.8	88.9	44.5	19	228.5	14.3	214.3	10.3

Dimensions (mm) – Air-Oil Tank AOT3

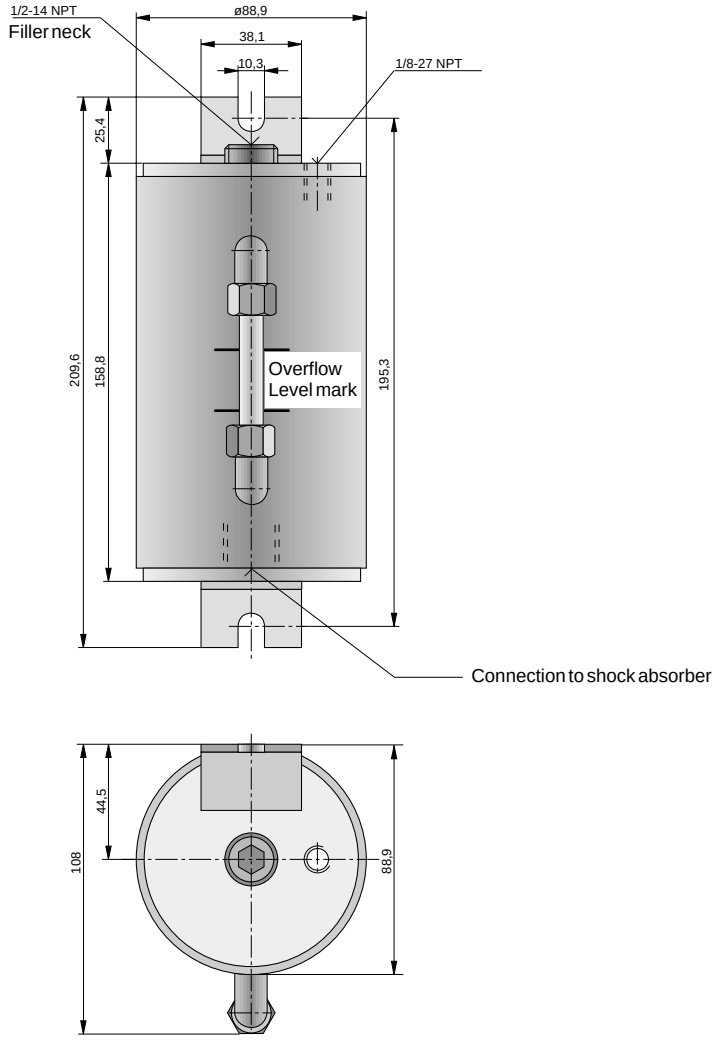

Order Instructions

Product	Order Instructions Type	Order No.
Shock absorber, stroke 50.8 mm	**SA-A 1-1/8 x 2**	**7880**
Shock absorber, stroke 102 mm	**SA-A 1-1/8 x 4**	**7885**
Shock absorber, stroke 152 mm	**SA-A 1-1/8 x 6**	**7886**
Soft pad	**SP 1-1/8**	**7994**
Square flange	**SF 1-1/8**	**7998**
Foot mounting	**FM 1-1/8**	**7993**
Additional mounting nut	**LN 1-1/8**	**7999**
Stop collar option a – SA-A 1-1/8 x 2, SA-A 1-1/8 x 4	**SC 1-1/8 A**	**7991**
Stop collar option b – SA-A 1-1/8 x 2, SA-A 1-1/8 x 4	**SC 1-1/8 B**	**7997**
Stop collar option a – SA-A 1-1/8 x 6	**SC 1-1/8 A**	**7891**
Stop collar option b – SA-A 1-1/8 x 6	**SC 1-1/8 B**	**77897**
Air-oil tank	**AOT-3**	**7899**

AUTOMATION TECHNOLOGY

Cylinders

HOERBIGER
ORIGA

Table of Contents
Cylinders

Survey 2.01.001E
Piston force and air consumption 2.05.001E
Piston rod load diagram 2.05.002E

Single Acting Cylinders
Series R 3... to ISO 6432 2.11.002E
Series SZK 3... 2.14.009E
Series SZ 7... 2.14.010E
Series DZS 3... 2.15.001E
Series NZK7..., NZK8... 2.28.001E

Double Acting Cylinders without Cushioning
for contactless position sensing:
Series SZ 6... 2.14.011E
Series R 6... to ISO 6432 2.11.002E, 2.21.002E
Series NZK6... 2.28.001E

Double Acting Cylinders with Cushioning
Series DZ1... to ISO 6431 2.30.050E
for contactless position sensing:
Series R5... to ISO 6432 2.11.002E, 2.21.002E
Series NR5..., NRK5... to ISO6431 2.21.003E
Series AZ 5... to ISO 6431 2.29.001E
Series DZ5... to ISO 6431 2.30.050E

Multiple Position Cylinders
Series AZZ5.../.../...- 2.34.010E

Cylinders with through Piston Rod
Series AZD5... with cushioning 2.34.001E
Series RDU6... without cushioning 2.11.025E
Series SZD6... without cushioning 2.14.025E
Series RDU6... without cushioning 2.21.025E

Cylinder Accessories
Piston rod clevis to CETOP RP 102 P 2.90.001E
Piston rod eye to CETOP RP 103 P 2.90.001E
Pivot for mounting B 2.90.002E
Pivot for mounting E 2.90.004E
Compensating coupling for piston rods 2.90.005E
Reed switch Type DZRK, DZRS 2.90.031E
Reed switch Type DZMK, DZMS 2.90.032E
Reed switch Type DZPV 2.90.033E
Reed switch Type DZMK0600, DZMS0600 2.90.036E
Reed switch, welding proofType UMS7 2.90.039E
Reed switch Type RS 2.90.040E
Reed switch Type ES 2.90.041E

Twin Rod Cylinders without Cushioning
SeriesAZV 2... 2.51.001E
for contactless position sensing:
Series SZV 6... 2.13.004E
Series AZV 6... 2.51.001E
Series NZKV 6... 2.47.001E

Twin Rod Cylinders with Cushioning
Series AZV 1... 2.51.001E
for contactless position sensing:
Series RDV 5... 2.49.001E
Series AZV 5... 2.51.001E

Twin Rod Cylinders with through Piston Rod
for contactless position sensing:
Series AZV3D 6... without cushioning 2.54.002E
Series AZV4D 6... without cushioning 2.54.001E
Series AZV3D 5... with cushioning 2.54.002E
Series AZV4D 5... with cushioning 2.54.001E

Cylinders for Special Applications
Blocking cylinder 2.75.002E
Series DZB - DZBA

Cylinders with Locking Unit
Series AZ 5.../...-FSE 2.75.003E
Series DZ 5.../...-FSE 2.75.003E

Locking Unit
Series FSE für Zyl.Ø 32-125 2.75.003E

Linear Guides
Linear guide, U-form 2.78.002E
for cylinders Ø8-100mm to ISO 6431, 6432
Linear guide, H-form 2.78.005E
for cylinders Ø32-100mm to ISO 6431

Bellows Cylinders
Port size G1/4, G3/4
Survey 2.80.001E
Bellows cylinder - single convolution type 2.80.008E
Bellows cylinder - double convolution type 2.80.059E

HOERBIGER-ORIGA GmbH • Industriestr. 8 • D-70794 Filderstadt • Tel. +49 (0)7158 1703-0 • Fax +49 (0)7158 64870 • e-mail: dmarket@at.hoerbiger.com
HOERBIGER-ORIGA GmbH • Südliche Römerstraße 15 • D-86972 Altenstadt • Tel. +49 (0)8861 221-0 • Fax +49 (0)8861 221-1305 • e-mail: pneu@at.hoerbiger.com
HOERBIGER-ORIGA GmbH (Interface) • Diessener Straße 8 • D-86956 Schongau • Tel. +49 (0)8861 2301-0 • Fax +49 (0)8861 2301-10 • e-mail interface@at.hoerbiger.com
HOERBIGER-ORIGA Pneumatik GmbH • Dr. Alexander-Schärf-Straße 12 • A-2700 Wiener Neustadt • Tel. +43 (0)2622 26071-0 • Fax +43 (0)2622 26071-5 • e-mail: amarket@hoerbiger-origa.com
HOERBIGER-ORIGA Ltd. • Tewkesbury Industrial Estate • Tewkesbury GL 20 8 ND GB • Tel. +44 1684 85 00 00 • Fax +44 1684 85 05 55 • e-mail: sales@hoerbiger-origa.com
HOERBIGER-ORIGA AB • Kungsgatan 10, Box 67 • SE-73622 Kungsör • Tel. +46 227 411 00 • Fax +46 227 411 29 • e-mail: semarket@hoerbiger-origa.com
Internet www.hoerbiger-origa.com

PNEUMATIC
GROUP

CYLINDERS

Ø 10-250 mm

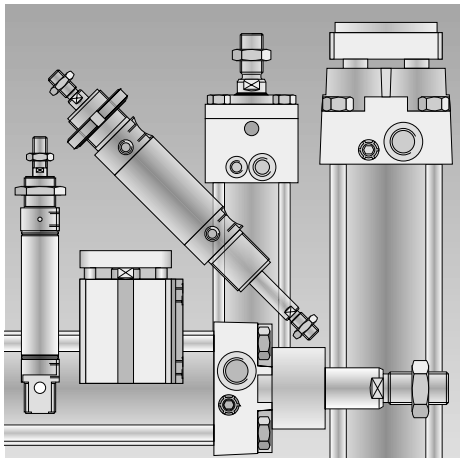

HOERBIGER
ORIGA

Fig.	Standard	System	Symbol	Series	Piston-Ø mm	Data Sheet No.
	-	Single acting without cushioning		**DZS3...**	25, 35	2.15.001E
	ISO 6432 CETOP RP 52 P			**R3...**	10-25	2.11.002E
	-			**SZK3...**	32-63	2.14.009E
	-	Single acting without cushioning, without cushioning		**SZ7...**	12-100	2.14.010E
	-			**NZK7...**	32-100	2.28.001E
	-			**NZK8...**	32-100	2.28.001E
	-	Twin rod cylinder- double acting doppeltwirkend ohne Dämpfung		**AZV2...**	32-100	2.51.001E
	-	Twin rod cylinder double acting without cushioning, with through piston rods		**AZV3D2...**	32-100	2.54.002E
	-			**AZV4D2...**	32-100	2.54.001E
	-	Double acting without cushioning, for contactless position sensing		**SZ6...**	12-100	2.14.011E
	ISO 6432 CETOP RP 52 P			**R6...**	10-25	2.11.002E
	-			**R6...**	32-63	2.21.002E
	-			**RK6...**	32-63	2.21.002E
	-			**NZK6...**	32-100	2.28.001E
	-	Double acting without cushioning, for contactless position sensing		**SZV6...**	20-100	2.13.004E
	-			**AZV6...**	32-100	2.51.001E
	-			**NZKV6...**	32-100	2.47.001E
	-			**RDU6...**	12-25	2.11.025E

Fig.	Standard	System	Symbol	Series	Piston-Ø mm	Data Sheet No.
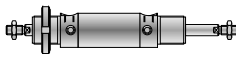	-	Double acting without cushioning, for contactless position sensing	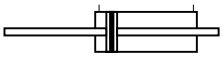	**RDU6...**	32-63	2.21.025E
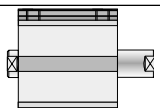	-			**SZD6...**	12-100	2.14.025E
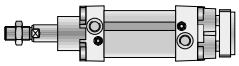	-	Twin rod cylinder double acting with cushioning, with through piston rods	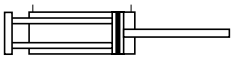	**AZV3D6...**	32-100	2.54.002E
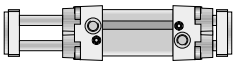	-		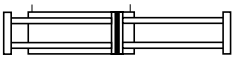	**AZV4D6...**	32-100	2.54.001E
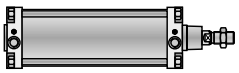	ISO 6431 CETOP RP 43 P RP 53 P		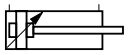	**DZ1...**	125-250	2.30.050E
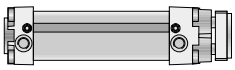	-	Twin rod cylinder- double acting with cushioning		**AZV1...**	32-100	2.51.001E
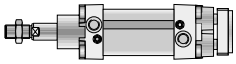	ISO 6432 CETOP RP 52 P -		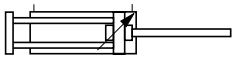	**AZV3D1 ...**	32-100	2.54.002E
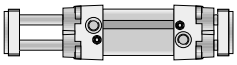	-		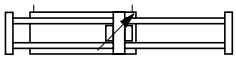	**AZV4D1...**	32-100	2.54.001E
	ISO 6431 CETOP RP 43 P RP 53 P	Double acting with cushioning, for contactless position sensing	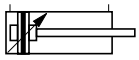	**R5...**	20-25	2.11.002E
				R5...	32-63	2.21.002E
				NR ....-...	32-100	2.21.003E
				NRK ....-...	32-100	2.21.003E
				AZ5...	32-100	2.29.001E
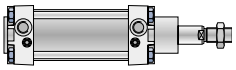				**DZ5...**	125-250	2.30.050E
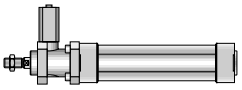	-	Double acting with cushioning, for contactless position sensing with Locking unit (blocking on forward -and reverse stroke)	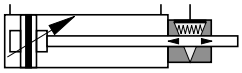	**AZ5.../...-FSE**	32-100	2.75.003E
				DZ5.../...-FSE	125	2.75.003E
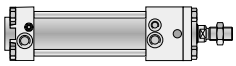	ISO 6431 ISO 6432	Double acting with cushioning at rear end - blocking on reverse stroke - blocking on forward stroke	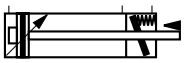	**DZB5...**	32-125	2.75.002E
			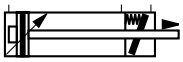	**DZBA5...**	32-125	2.75.002E

Fig.	Standard	System	Symbol	Series	Piston-Ø mm	Data Sheet No.
	-	Double acting with cushioning, for contactless position sensing	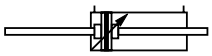	**AZD5...**	32-100	2.34.001E
	-	Multi-position cylinder double acting with cushioning, for contact-less position sensing		**AZZ5.../.../...**	32-100	2.34.010E
	-	Twin rod cylinder Double acting with cushioning, with through piston rods		**RDV5...**	25	2.49.001E
	-			**AZV5...**	32-100	2.51.001E
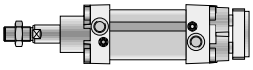	-		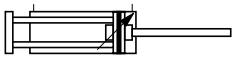	**AZV3D5...**	32-100	2.54.002E
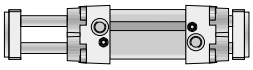	-		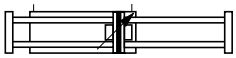	**AZV4D5...**	32-100	2.54.001E

Bellows cylinder see 2.80.001E
Special cylinder on request

A3P042E71JZ00X

The right to introduce technical modifications is reserved

HOERBIGER-ORIGA GmbH • Industriestr. 8 • D-70794 Filderstadt • Tel. +49 (0)7158 1703-0 • Fax +49 (0)7158 64870 • e-mail: dmarket@at.hoerbiger.com
HOERBIGER-ORIGA GmbH • Südliche Römerstraße 15 • D-86972 Altenstadt • Tel. +49 (0)8861 221-0 • Fax +49 (0)8861 221-1305 • e-mail: pneu@at.hoerbiger.com
HOERBIGER-ORIGA GmbH (Interface) • Diessener Straße 8 • D-86956 Schongau • Tel. +49 (0)8861 2301-0 • Fax +49 (0)8861 2301-10 • e-mail interface@at.hoerbiger.com
HOERBIGER-ORIGA Pneumatik GmbH • Dr. Alexander-Schärf-Straße 12 • A-2700 Wiener Neustadt • Tel. +43 (0)2622 26071-0 • Fax +43 (0)2622 26071-5 • e-mail: amarket@hoerbiger-origa.com
HOERBIGER-ORIGA Ltd. • Tewkesbury Industrial Estate • Tewkesbury GL 20 8 ND GB • Tel. +44 1684 85 00 00 • Fax +44 1684 85 05 55 • e-mail: sales@hoerbiger-origa.com
HOERBIGER-ORIGA AB • Kungsgatan 10, Box 67 • SE-73622 Kungsör • Tel. +46 227 411 00 • Fax +46 227 411 29 • e-mail: semarket@hoerbiger-origa.com
Internet www.hoerbiger-origa.com

Piston Force and Air Consumption

for Standard Cylinders

		Piston diameter (mm) 8	10	12	16	20	25	32	40	50	63	80	100	125	160	200	250
Piston area* (cm^2)	A	0,5	0,8	1,1	2,0	3,1	4,9	8,0	12,6	19,6	31,2	50,0	78,0	122,7	201,0	314,1	490,8
	B	0,38	0,65	0,85	1,7	2,6	4,1	6,9	10,6	16,5	28,0	45,4	73,6	114,7	188,5	301,5	471,2
Approx. piston force (kN) at ... bar	1	0,0045	0,007	0,010	0,018	0,028	0,044	0,072	0,113	0,176	0,281	0,452	0,706	1,104	1,809	2,827	4,417
	2	0,0090	0,014	0,020	0,036	0,056	0,088	0,144	0,226	0,353	0,561	0,905	1,413	2,209	3,619	5,654	8,835
	3	0,0135	0,021	0,030	0,054	0,084	0,132	0,217	0,339	0,530	0,842	1,357	2,120	3,313	5,428	8,482	13,253
	4	0,0180	0,028	0,040	0,072	0,113	0,176	0,289	0,452	0,707	1,122	1,809	2,827	4,417	7,238	11,309	17,671
	5	0,0225	0,035	0,050	0,090	0,141	0,220	0,362	0,565	0,884	1,402	2,262	3,534	5,522	9,407	14,137	22,089
	6	0,0270	0,042	0,060	0,108	0,169	0,265	0,434	0,678	1,060	1,683	2,714	4,241	6,626	10,857	16,964	26,507
	7	0,0315	0,049	0,070	0,126	0,197	0,309	0,506	0,792	1,237	1,963	3,167	4,948	7,731	12,666	19,792	30,952
	8	0,0360	0,056	0,080	0,144	0,226	0,353	0,579	0,905	1,414	2,244	3,619	5,654	8,835	14,476	22,619	35,342
	9	0,0405	0,063	0,090	0,162	0,254	0,397	0,651	1,018	1,590	2,524	4,071	6,361	9,940	16,286	25,447	39,760
	10	0,0450	0,070	0,100	0,180	0,282	0,441	0,723	1,131	1,767	2,805	4,523	7,068	11,044	18,095	28,274	44,178
Approx. air consumption (dm^3/100 mm stroke at ... bar[1]) Figures are valid for piston area A (see symbol)	1	0,010	0,016	0,02	0,04	0,06	0,09	0,18	0,30	0,46	0,71	1,20	1,90	2,65	4,60	6,90	10,80
	2	0,015	0,024	0,03	0,06	0,09	0,14	0,27	0,43	0,69	1,00	1,85	2,85	4,10	6,90	10,40	16,30
	3	0,020	0,032	0,04	0,08	0,12	0,19	0,36	0,58	0,92	1,40	2,45	3,80	5,50	9,20	13,90	21,80
	4	0,025	0,040	0,05	0,10	0,15	0,24	0,45	0,72	1,15	1,75	3,00	4,75	6,95	11,50	17,40	27,20
	5	0,030	0,048	0,06	0,12	0,18	0,29	0,55	0,86	1,40	2,10	3,65	5,70	8,40	13,80	20,90	32,70
	6	0,035	0,056	0,07	0,14	0,21	0,34	0,65	1,00	1,60	2,50	4,25	6,60	9.70	16,00	24,40	38,20
	7	0,040	0,064	0,08	0,16	0,25	0,39	0,73	1,15	1,80	2,85	4,85	7,60	11,15	18,30	27,90	43,70
	8	0,045	0,072	0,09	0,18	0,28	0,41	0,82	1,30	2,00	3,20	5,45	8,50	12,55	20,60	31,50	49,20
	9	0,050	0,080	0,10	0,20	0,31	0,49	0,90	1,45	2,30	3,55	6,10	9,50	14,00	22,90	35,00	54.60
	10	0,055	0,088	0,11	0,22	0,34	0,53	1,00	1,60	2,50	3,90	6,40	10,40	15,40	25,20	38,50	60,10

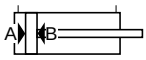

* A = Piston area - piston side
B = Piston area - piston rod side

[1] Air consumption when charging in dm^3/100 mm stroke. The tube volume must also be taken into consideration.

The given figures relate to piston area A.
The figures for piston area B change proportionally with the piston areas A to B.

A1P347E00DX00X

The right to introduce technical modifications is reserved

For piston load diagram see 2.05.002E

HOERBIGER-ORIGA GmbH • Industriestr. 8 • D-70794 Filderstadt • Tel. +49 (0)7158 1703-0 • Fax +49 (0)7158 64870 • e-mail: dmarket@at.hoerbiger.com
HOERBIGER-ORIGA GmbH • Südliche Römerstraße 15 • D-86972 Altenstadt • Tel. +49 (0)8861 221-0 • Fax +49 (0)8861 221-1305 • e-mail: pneu@at.hoerbiger.com
HOERBIGER-ORIGA GmbH (Interface) • Diessener Straße 8 • D-86956 Schongau • Tel. +49 (0)8861 2301-0 • Fax +49 (0)8861 2301-10 • e-mail interface@at.hoerbiger.com
HOERBIGER-ORIGA Pneumatik GmbH • Dr. Alexander-Schärf-Straße 12 • A-2700 Wiener Neustadt • Tel. +43 (0)2622 26071-0 • Fax +43 (0)2622 26071-5 • e-mail: amarket@hoerbiger-origa.com
HOERBIGER-ORIGA Ltd. • Tewkesbury Industrial Estate • Tewkesbury GL 20 8 ND GB • Tel. +44 1684 85 00 00 • Fax +44 1684 85 05 55 • e-mail: sales@hoerbiger-origa.com
HOERBIGER-ORIGA AB • Kungsgatan 10, Box 67 • SE-73622 Kungsör • Tel. +46 227 411 00 • Fax +46 227 411 29 • e-mail: semarket@hoerbiger-origa.com
Internet www.hoerbiger-origa.com

Piston Force and Air Consumption

for Oval Cylinders

Piston force

Piston Ø (mm)	Piston rod Ø (mm)	Series	Piston area (cm^2)		Piston force in daN at ... bar 2	3	4	5	6	7
8	4	double acting	A*	0,63	1,26	1,89	2,52	3,15	3,78	4,41
			B*	0,51	1,02	1,53	2,04	2,55	3,06	3,57
		single acting	A**	0,63	0,63	1,13	1,77	2,52	3,15	3,78
			B**	0,51	0,42	0,93	1,44	1,95	2,46	2,97
10	4	double acting	A*	1,00	2,00	3,00	4,00	5,00	6,00	7,00
			B*	0,88	1,76	2,64	3,52	4,40	5,28	6,16
		single acting	A**	1,00	1,25	2,37	3,63	4,12	5,00	6,12
			B**	0,88	0,91	1,79	2,67	3,55	4,43	5,31
12	6	double acting	A*	1,5	3,00	4,50	6,00	7,50	9,00	10,50
			B*	1,23	2,46	3,69	4,92	6,15	7,38	8,61
		single acting	A**	1,5	2,44	4,08	5,40	6,88	8,37	10,12
			B**	1,23	1,61	2,84	4,07	5,30	6,53	7,76
16	6	double acting	A*	2,00	4,00	6,00	8,00	10,00	12,00	14,00
			B*	1,83	3,46	5,20	6,90	8,70	10,40	12,10
		single acting	A**	2,00	3,50	5,00	7,40	8,20	9,10	12,00
			B**	1,73	1,51	3,25	4,95	6,75	8,45	10,15
20	8	double acting	A*	3,8	7,60	11,4	15,20	19,00	22,80	26,60
			B*	3,3	6,60	9,90	13,20	16,50	19,80	23,10
		single acting	A**	3,8	4,63	8,78	4,63	15,98	19,52	24,15
			B**	3,3	3,70	5,88	10,30	13,60	16,90	20,20
25	10	double acting	A*	4,3	8,60	12,90	17,20	21,50	25,80	30,10
			B*	3,52	7,04	10,56	14,08	17,60	21,12	24,64
		single acting	A**	4,30	6,40	11,70	16,20	21,50	26,30	31,20
			B**	3,52	4,14	7,66	11,18	14,70	18,22	21,74

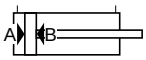

A* = Piston area on piston side
B* = Piston area on piston rod side
A** = Area with spring on piston rod side.
B** = Area with spring on piston side.

Piston Rod Load Diagram

- **for standard cylinder types**
- **for twin rod cylinders**
- **for Oval cylinders**

Piston Rod load Diagram
Cylinder Diameter 8-250 mm

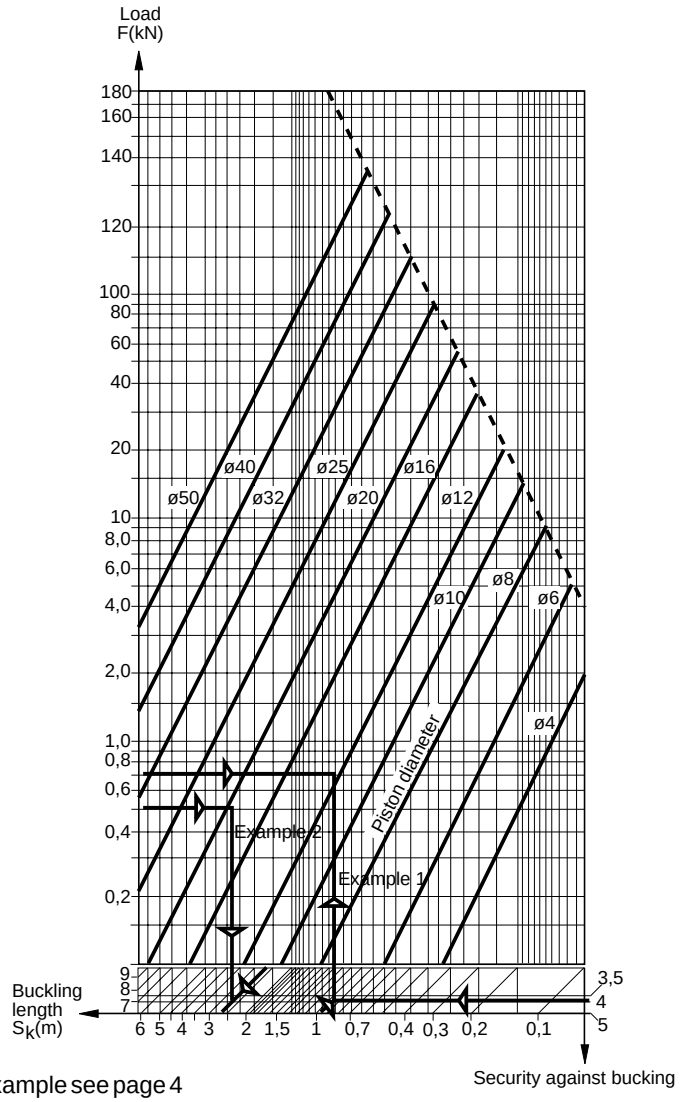

For example see page 4

Buckling Possibilities of Piston Rods

Mounting:
A, C, D

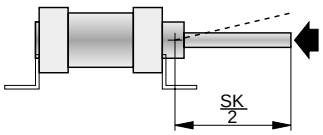

Mounting:
B

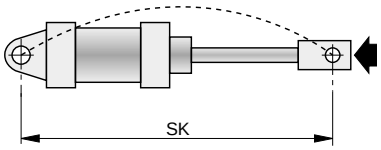

Mounting:
A, C, D

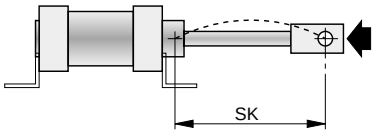

Mounting:
E

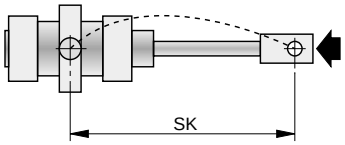

By means of this diagram the necessary piston rod diameter has to be determined to prevent the rod from buckling.

Always take the maximum piston thrust attainable at the specified operating pressure with the cylinder in question (see 2.05.001E).

Loads resulting from longer strokes (as indicated in the diagram) on request.

In cases of special mounting conditions and transverse forces please consult us.

Recommended security against buckling: 3.5 to 5.

A1P348E00DX00X

The right to introduce technical modifications is reserved

HOERBIGER ORIGA

Twin Rod Cylinder [1)]
Transverse Load - Ø 25-100 mm

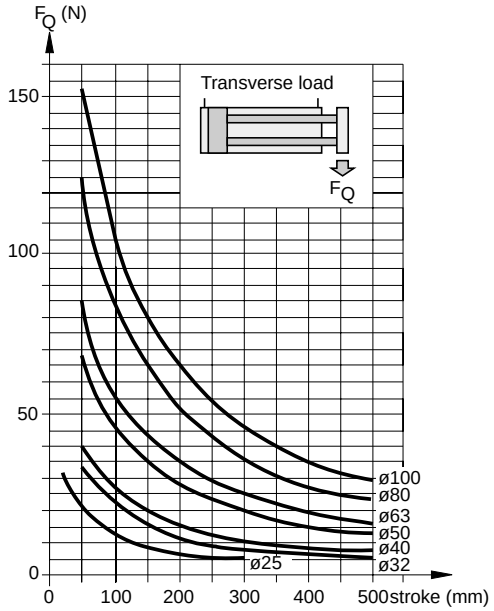

Twin Rod Cylinder [1)]
Transverse Load - Ø 25-100 mm

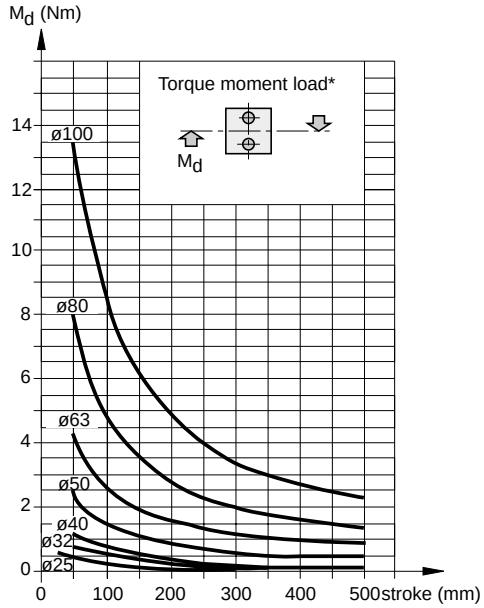

Twin Rod Cylinder [1)]
Transverse and Torque Moment Load - Ø 25 mm

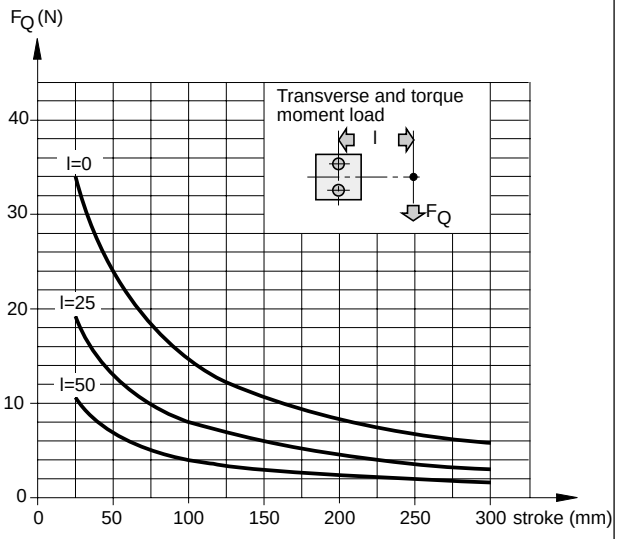

Twin Rod Cylinder [1)]
Transverse and Torque Moment Load - Ø 32 mm

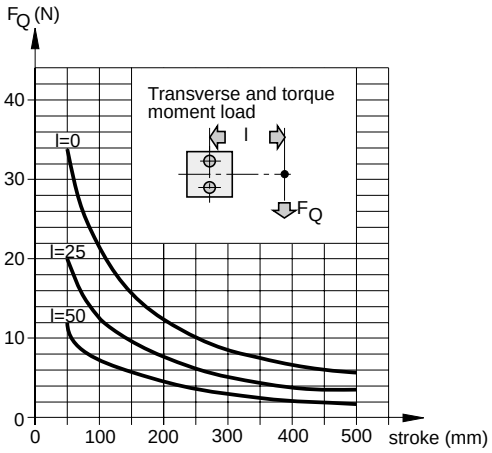

Twin Rod Cylinder [1)]
Transverse and Torque Moment Load - Ø 40 m

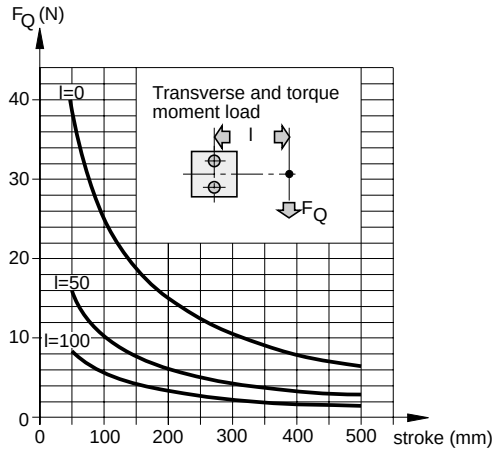

Twin Rod Cylinder [1)]
Transverse and Torque Moment Load - Ø 50 mm

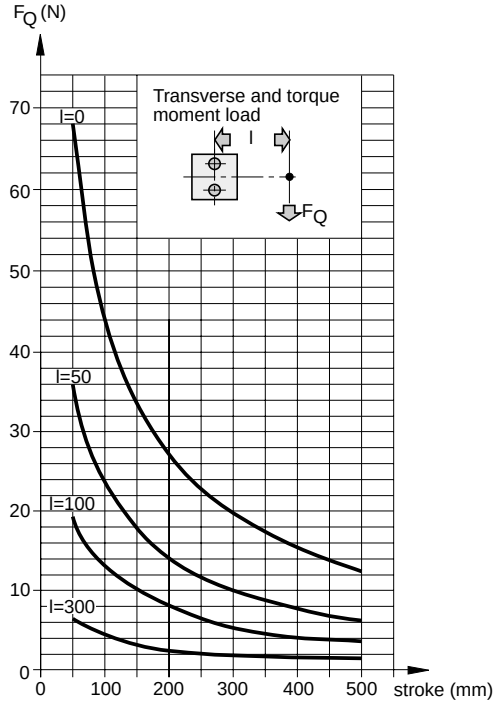

Twin Rod Cylinder [1)]
Transverse and Torque Moment Load - Ø 63 mm

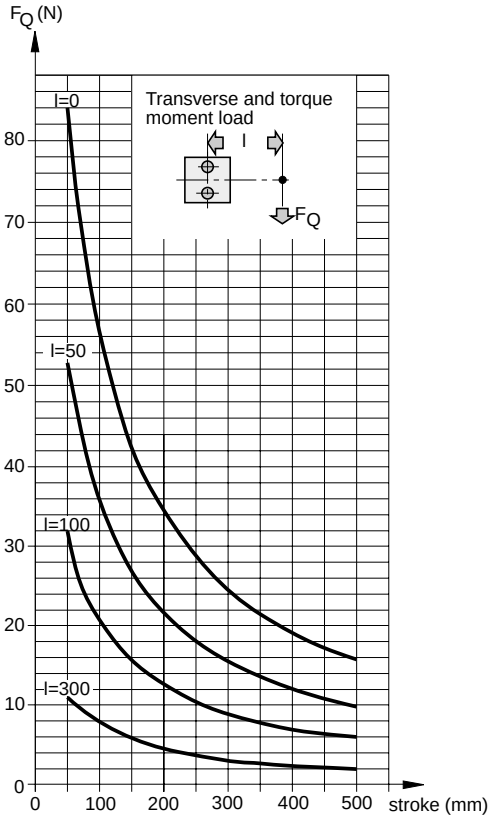

Twin Rod Cylinder [1)]
Transverse and Torque Moment Load - Ø 80 mm

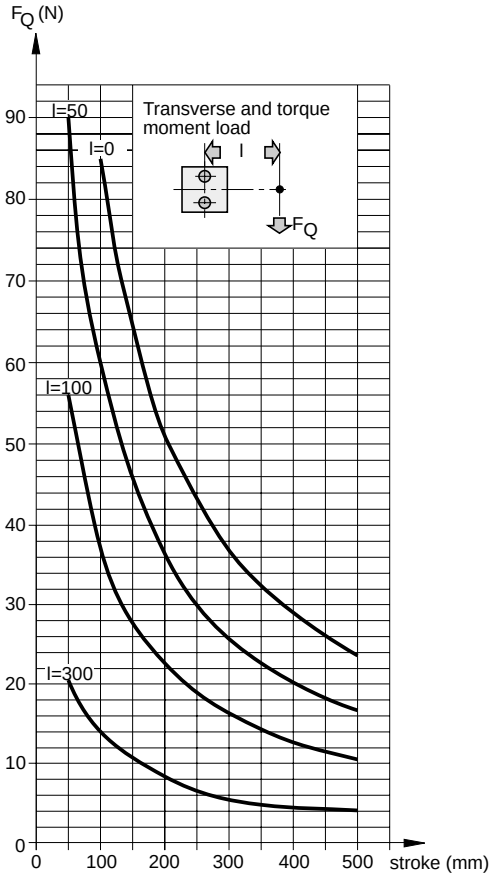

[1)] for installation instructions see page 4

Twin Rod Cylinder [1)]
Transverse and Torque Moment Load - Ø 100 mm

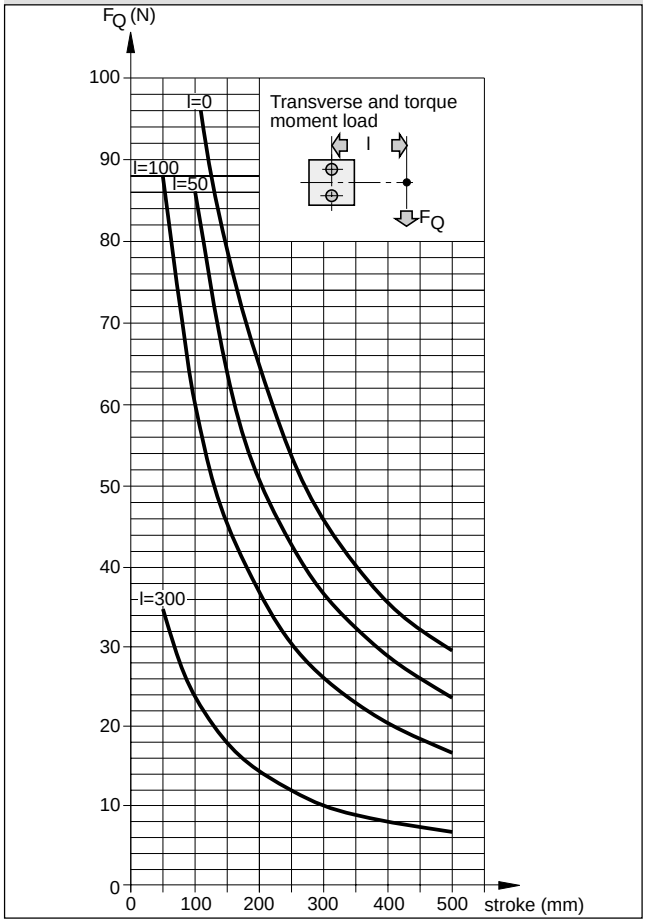

Installation Instructions for Twin Rod Cylinders

For maximum reliability and service life, transverse loads should be applied as shown.

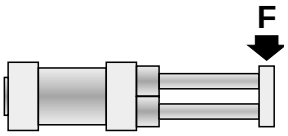

Examples

Example 1:

Given	Piston thrust: 0.7 kN Stroke length: 1000 mm Operating pressure: approx. 6 bar Mounting type C
Wanted	Piston rod diameter with 4-fold security against buckling; Check the piston thrust of the cylinder diameter resulting from the piston rod diameter
Solution	see example 2 in piston rod load diagram The piston rod diameter lies between 12 and 16 mm - a cylinder with a piston rod of 16 mm diameter therefore has to be chosen. According to the diagram referring to piston force and air consumption a cylinder 05 40 mm diameter is required

Example 2:

Given	Cylinder: 50 mm Piston rod: Ø 20 mm Mounting type: B Stroke length: 1000 mm Piston thrust: 0.5 kN at 6 bar
Wanted	max. stroke with 4-fold security against buckling
Solution	see example 1 in piston rod load diagram. S_k = 2900 mm max. stroke = 1450 mm

For piston force and air consumption see 2.05.001E

Cylinder

ø 10-25 mm

to ISO 6432,
CETOP RP 52 P

Versions:
Single acting
Double acting without cushioning
Double acting with adjustable cushioning for contactless position sensing

Series R ....

R 3 ...

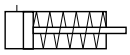

R 6 ...

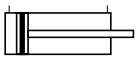

R 5 ...

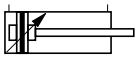

Characteristics according to VDI 3292 Pressures quoted as gauge pressure

Characteristics		Symbol	Unit	Description				
General Features								
Type				Piston rod cylinder				
Series				R....				
System	R 6...			Double acting without cushioning				
	R 5...			Double acting with cushioning				
	R 3...			Single acting				
Mounting				See drawing				
Tube connection				Thread				
Ambient temperature range		ϑ_{min} ϑ_{max}	°C °C	-10 +70	Note: When using below freezing			
Medium temperature range		ϑ_{max}	°C	+70	point (°C), please contact us for advice.			
Weight (mass)			kg	See table				
Installation				In any position				
Medium				Filtered and lubricated or filtered unlubricated compressed air				
Lubrication				Oil mist lubrication compatible with Buna N				
Material	Cylinder barrel			Stainless steel				
	Front/rear covers			Al, anodized				
	Piston rod			Stainless steel				
Pneumatic Characteristics								
Nominal pressure		p_n	bar	6				
Operating pressure range		p_{min} p_{max}	bar bar	Cyl.-Ø 8,10 1,5 10		Cyl.-Ø 12-25 1 10		
Piston diameter			mm	10	12	16	20	25
Port size				M5	M 5	M 5	G 1/8	G 1/8
Piston rod diameter			mm	4	6	6	8	10
Stroke length				For max. stroke length see piston rod load diagramm				
Piston force and air consumption				See data sheet 2.05.001E				
Cushioning (only Ø 20, 25)				to both sides, progressively adjustable (Series R 5...)				
Cushioned stroke			Cyl.-Ø	10	12	16	20	25
			mm	-	-	-	17	17

Weight (mass) kg

Mounting	Cylinder diameter 10		12		16		20		25	
	1	2	1	2	1	2	1	2	1	2
Basic cylinder	0,065	0,025	0,120	0,040	0,135	0,050	0,260	0,070	0,350	0,110
RA (1 bracket)	0,022		0,043		0,043		0,100		0,100	
RC	0,013		0,028		0,028		0,050		0,050	
RB	0,023		0,036		0,036		0,080		0,080	

*1 = Weight for cylinder with 100 mm stroke
2 = Weight for every additional 100 mm stroke length

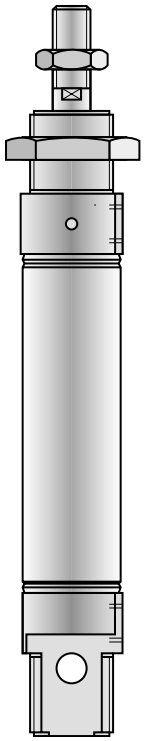

Universal cylinder mountable to the front and rear cylinder covers by means of a thread. Pivot mounted on the rear cylinder covers.

The delivery includes:
1 Cylinder
1 Hexagon nut for piston rod thread and cylinder mounting

Versions without contactless position sensing on request.

For product group list see 2.01.001E
For magnetic switches see 2.90.040E, 2.90.04E
For piston rod load diagram see 2.05.002E
For piston force and air consumption see 2.05.001E

HOERBIGER ORIGA

A1P400E00DX00X

The right to introduce technical modifications is reserved

Dimensions - Double Acting

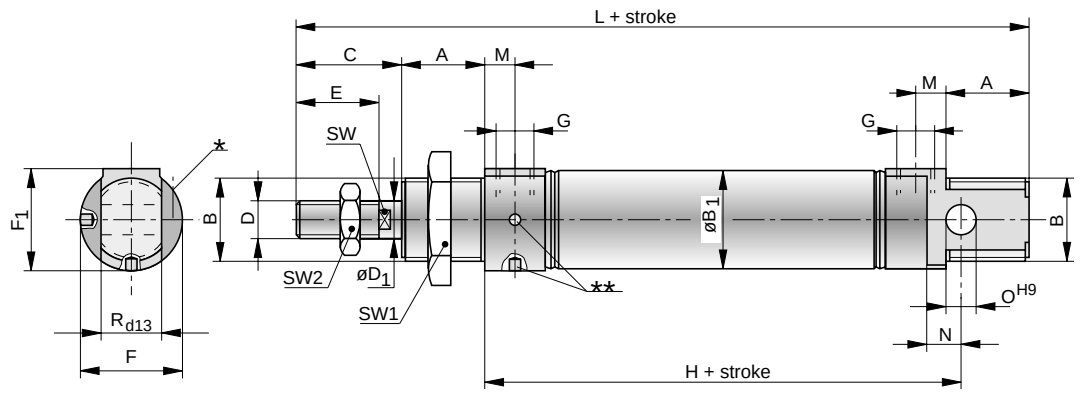

* From the connection side: adjustable end cushioning only for types R 5020, R 5025
** Holes for C-spanner when mounting cylinder

Dimensions - Single Acting

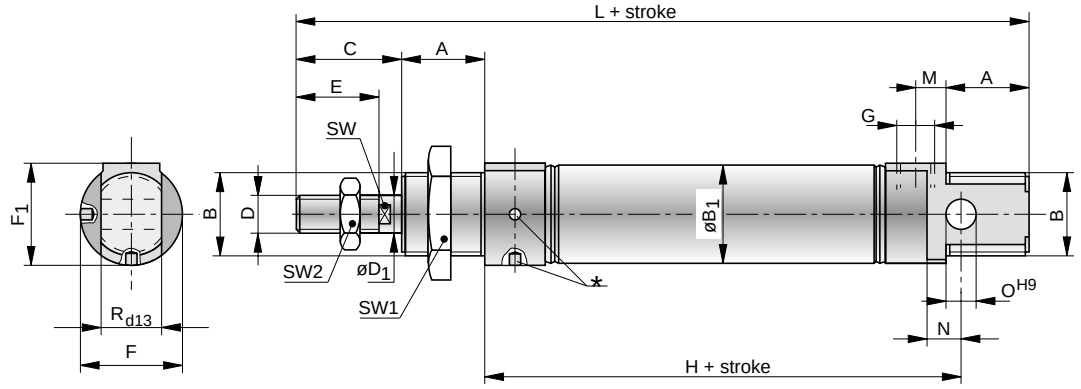

* Holes for C-spanner when mounting cylinder

Dimension Table (mm) for Basic Cylinder

Cyl. Ø	A	B	$ØB_1$	C	D	$ØD_1$	E	F	F_1	G	H+ stroke	L+ stroke	M	N	Ø O^{H9}	R_{d13}	SW	SW_1
10	12	M12x1,25	11,3	16	M4	4	12	15	15	M5	48	86	5,5	6	4	8	3	17
12	17	M16x1,5	13,3	21	M6	6	16	20	20	M5	53	104	5,5	9	6	12	5	22
16	17	M16x1,5	17,3	21	M6	6	16	20	20	M5	60	111	5,5	9	6	12	5	22
20	20	M22x1,5	21,3	24	M8	8	20	27	27	G1/8	71	132	8,5	12	8	16	7	27
25	22	M22x1,5	26,5	28	M10x1,25	10	22	27	27	G1/8	76	141	8,5	12	8	16	9	27

Dimensions Mounting RA

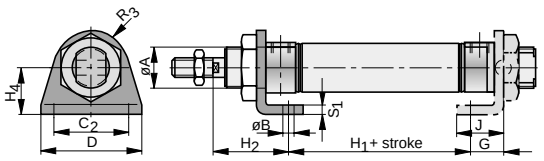

Material: steel, passivated

Dimensions Mounting RC

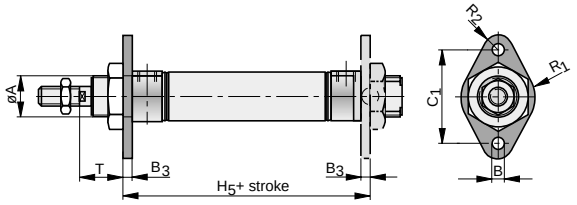

Material: steel, passivated

Dimension Table (mm) for Mounting RA

Cyl.-Ø	ØA	ØB	C_2	D	G	H_1+ stroke	H_2	H_4	J	R_3	S_1
10	12	4,5	25	35	11	26	24	16	16	10	3
12	16	5,5	32	42	14	29	32	20	20	13,5	4
16	16	5,5	32	42	14	36	32	20	20	13,5	4
20	22	6,6	40	54	17	44	36	25	25	18	5
25	22	6,6	40	54	17	45	40	25	25	18	5

Dimension Table (mm) for Mounting RC

Cyl.-Ø	ØA	ØB	B_3	C_1	H_5+ stroke	R_1	R_2	T
10	12	4,5	3	30	52	12,5	5	13
12	16	5,5	4	40	58	15	6	18
16	16	5,5	4	40	64	15	6	18
20	22	6,6	5	50	78	20	8	19
25	22	6,6	5	50	79	20	8	23

Rear Trunnion Mounting RB

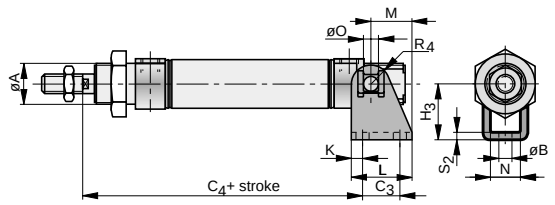

Material: steel, passivated

Dimension Table (mm)

Cyl. Ø	ØB	C_3	C_4+ stroke	H_3	K	L	M	N	ØO	R_4	S_2
10	4,5	12,5	65	24	6,5	23	18	8,1	4	5	2,5
12	5,5	15	73	27	5	25	18	12,1	6	7	3
16	5,5	15	80	27	5	25	18	12,1	6	7	3
20	6,6	20	91	30	6	32	22	16,1	8	10	4
25	6,6	20	100	30	6	32	22	16,1	8	10	4

Piston Rod Clevis to CETOP RP 102 P

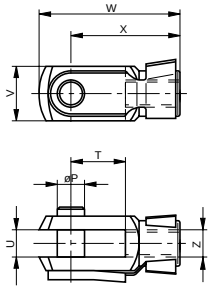

Order Instructions, Dimension Table (mm), Weight

Order Instructions Type	Order No.	to Cyl.-Ø	ØP	T	U	V	W	X	Z	Weight (kg)
GK-M4	**KZ 1413**	10	4	8	4	8	22	16	M4	0,008
GK-M6	**KY 6132**	12, 16	6	12	6	12	31	24	M6	0,016
GK-M8	**KY 6133**	20	8	16	8	16	42	32	M8	0,038
GK-M10x1,25	**KY 6135**	25	10	20	10	20	52	40	M10x1,25	0,080

Material: galvanized steel

Piston Rod Eye to CETOP RP 103 P

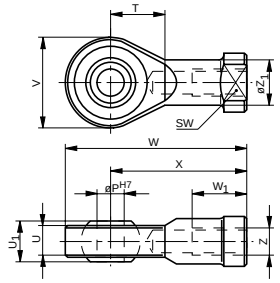

Order Instructions, Dimension Table (mm), Weight

Order Instructions Type	Order No.	to Cyl.-Ø	$Øp^{H7}$	T	U	U_1	V	W	W_1	X	Z	$ØZ_1$	SW	Weight (kg)
GA-M4	**KX 6023**	10	5	9	6	8	16	35	12	27	M4	9	8	0,021
GA-M6	**KY 6144**	12, 16	6	11	6,75	9	20	40	12	30	M6	10	11	0,025
GA-M8	**KY 6145**	20	8	13	9	12	24	48	16	36	M8	12,5	14	0,043
GA-M10 x 1,25	**KY 6147**	25	10	15	10,5	14	28	57	20	43	M10 x1,25	15	17	0,072

Material: galvanized steel

Compensating Coupling for Piston Rod

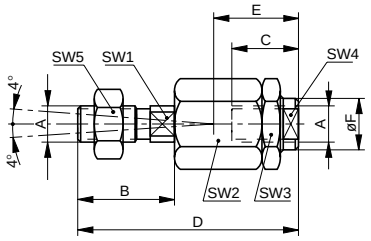

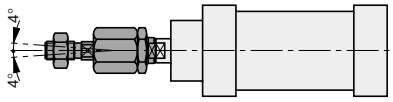

Angular compensation

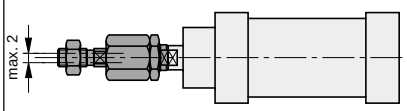

Radial compensation of centre axis

Order Instructions, Dimension Table (mm), Weight

Order Instructions Type	Order No.	A	B	C	D	E	ØF	SW1	SW2	SW3	SW4	SW5	Weight (kg)
AK-M4	**KY 1152**	M4	8	14	34	20	12	3	12	12	12	7	0,018
AK-M6	**KY 1126**	M6	12	11	36	14	8,5	5	13	13	7	10	0,021
AK-M8	**KY 1127**	M8	13	14	46	20	12,5	7	17	17	10	13	0,049
AK-M10x1,25	**KY 1129**	M10x1,25	20	23	70	31	21,5	12	30	30	19	17	0,218

Order Instructions

Basic Cylinder (without mountings)

Series	Symbol	Piston-Ø	Stroke Length	Order Instructions Type	Order No.
Single acting without adjustable end cushioning	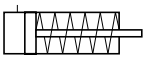	10	max. 25*	**R 3010/..**	**PA 67410-....**
		12	max. 50**	**R 3012/..**	**PA 67430-....**
		16	max. 50**	**R 3016/..**	**PA 67450-....**
		20	max. 50**	**R 3020/..**	**PA 67470-....**
		25	max. 50**	**R 3025/..**	**PA 67500-....**
Double acting with adjustable end cushioning for contactless position sensing	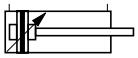	20	***	**R 5020/..**	**PA 67480-....**
		25	***	**R 5025/..**	**PA 67510-....**
Double acting without adjustable end cushioning for contactless position sensing	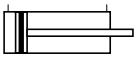	10	***	**R 6010/..**	**PA 67420-....**
		12	***	**R 6012/..**	**PA 67440-....**
		16	***	**R 6016/..**	**PA 67460-....**
		20	***	**R 6020/..**	**PA 67490-....**
		25	***	**R 6025/..**	**PA 67520-....**

Complete type designation and order no. with stroke length (in mm) (in mm 4-digit)

Standard stroke length: * 0010, 0025
** 0010, 0025, 0050
*** 00,25, 0050, 0080, 0100, 0125, 0160, 0200, 0250, 0320

Mountings - Accessories

Description	Typ	Order No. Ø10	Ø12	Ø16	Ø20	Ø25
Foot mounting (1 mounting bracket)	**RA 1-..**	**KX 9271**	**KK 26302**	**KK 26302**	**KK 28302**	**KK 28302**
Foot mounting (standard version)	**RA 2-..***	**PD 31522**	**PD 25771**	**PD 25771**	**PD 25772**	**PD 25772**
Flange mounting (1 flange)	**RC- ..**	**KX 9272**	**KK 26305**	**KK 26305**	**KK 28305**	**KK 28305**
Rear trunnion mounting	**RB- ..**	**KZ 1412**	**KZ 1419**	**KZ 1419**	**KZ 1420**	**KZ 1420**

Rear trunnion mounting**: RA 1-25 KK 28302**

* consisting of 2 mounting brackets and 1 hexagonal nut

Cylinder

ø12-25mm

with through piston rod

Versions:
Double acting without cushioning
for contactless position sensing

Series RDU ....

RDU 6...

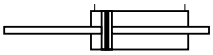

Characteristics according to VDI 3292			Pressures quoted as gauge pressure			
Characteristics		Symbol	Unit	Description		
General Features						
Type				Round cylinder with through piston rod		
Series				RDU 6...		
System				Double acting without cushioning		
Mounting				See drawing		
Tube connection				Thread		
Ambient temperature range		ϑ_{min} ϑ_{max}	°C °C	-10 +70	Note: When using below freezing point (°C), please contact us for advice.	
Medium temperature range		ϑ_{max}	°C	+70		
Weight (mass)			kg	See table		
Installation				In any position		
Medium				Filtered and lubricated or filtered unlubricated compressed air		
Lubrication				Oil mist lubrication compatible with Buna N		
Material	Cylinder barrel			Stainless steel		
	Front			Anodized aluminium		
	Piston rod			Stainless steel		
Pneumatic Characteristics						
Nominal pressure		p_n	bar	6		
Operating pressure range		p_{min} p_{max}	bar bar	1 (1,5 bei Ø12) 10		
Piston diameter			mm	12	16	20	25
Port size				M5	M5	G1/8	G1/8
Piston rod diameter			mm	6	6	8	10
Stroke length				For max. stroke length see piston rod load diagramm 2.05.002E		
Piston force and air consumption				See data sheet 2.05.001E		

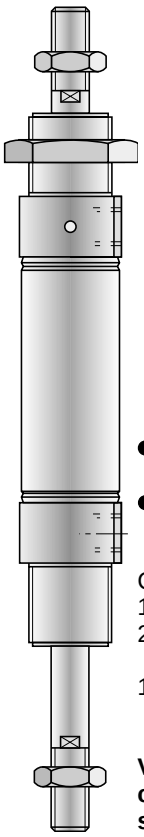

- Universal cylinder with screw thread mounting on front and rear covers
- Reed switch mounting by band

Comprises:
1 cylinder
2 hexagonal nuts for piston rod thread
1 hexagonal nut for cylinder mounting

Versions without contactless position sensing on request.

Weight (mass) kg

Typ	Weight (kg) *	Weight for every additional 100 mm stroke length
RDU 6012/100	0,155	0,060
RDU 6016/100	0,170	0,070
RDU 6020/100	0,330	0,110
RDU 6025/100	0,460	0,170

* Weight for cylinder with 100 mm stroke

For product group list see 2.01.001E
For magnetic switches see 2.90.040E, 2.90.041E
For piston rod load diagram see 2.05.002E
For piston force and air consumption see 2.05.001E

A1P459E00DX00X

The right to introduce technical modifications is reserved

HOERBIGER ORIGA

Dimensions

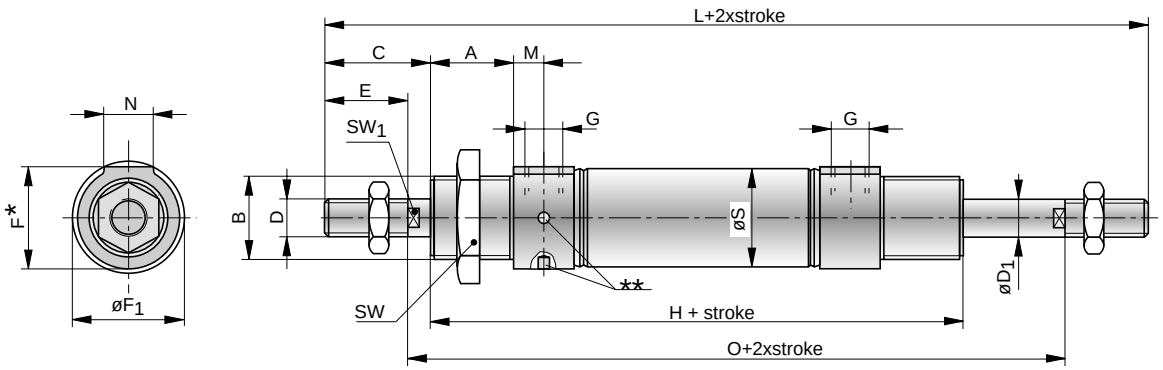

Dimension Table (mm)

Cyl.-Ø	A	B	C	D	$ØD_1$	E	F	$ØF_1$	G	H+ stroke	O+2x stroke	L+2x stroke	M	N	ØS	SW_1	SW
12	17	M16x1,5	21	M6	6	16	20	20	M5	82	92	124	5,5	9,5	13,3	5	22
16	17	M16x1,5	21	M6	6	16	20	20	M5	90	100	132	5,5	9,5	17,3	5	22
20	20	M22x1,5	24	M8	8	20	27	27	G1/8	108	116	156	8,5	14,5	21,3	7	27
25	22	M22x1,5	28	M10x1,25	10	22	27	27	G1/8	113	125	169	8,5	14,5	26,5	9	27

* Profile height of cylinder cover ** Holes for C-spanner when mounting cylinder

Mounting options

Foot mounting
(2 mounting brackets)

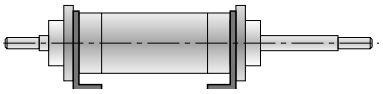

Material: steel, passivated

Foot mounting

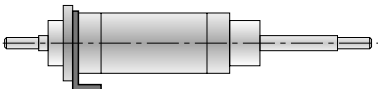

steel, passivated

Flange mounting

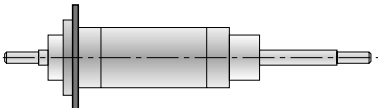

steel, passivated

Order Instructions

Basic Cylinder (without mountings)

Series	Symbol	Piston-Ø	Order Instructions Type	Order No.
Double acting without adjustable end cushioning for contactless position sensing	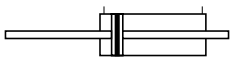	12	**RDU 6012/...**	**PA 67690-....**
		16	**RDU 6016/...**	**PA 67700-....**
		20	**RDU 6020/...**	**PA 67710-....**
		25	**RDU 6025/...**	**PA 67720-....**

Complete type designation and order no. with stroke length (in mm) (in mm 4-digit)

Standard stroke length: 0025, 0050, 0080, 0100, 0125, 0160, 0200, 0250, 0320 bevorzugt lieferbar

Mountings - Accessories

Description	Type	Order No. Ø12	Ø16	Ø20	Ø25
Foot mounting (1 mounting bracket)	**RA 1-..**	**KK 26302**	**KK 26302**	**KK 28302**	**KK 28302**
Foot mounting (standard version)	**RA 2-..**	**PD 25771**	**PD 25771**	**PD 25772**	**PD 25772**
Flange mounting (1 flange)	**RC- ..**	**KK 26305**	**KK 26305**	**KK 28305**	**KK 28305**

Complete type designation with piston-Ø

Ordering example: RA 1-25 KK 28302

Short Stroke Cylinder

ø 20-63 mm

non-rotating

Double acting without cushioning for contactless position sensing

Series SZV ....

SZV 6...

Characteristics according to VDI 3294			Pressures quoted as gauge pressure					
Characteristics	Symbol	Unit	Description					
General Features								
Type			Compact cylinder, non-rotating					
Series			SZV 6000					
System			Double acting for contactless position sensing					
Mounting			2 mounting screws for size see drawings					
Ambient temperature range	ϑ_{min} ϑ_{max}	°C °C	-10 +70	Note: When using below freezing point (°C), please contact us for advice.				
Medium temperature range	ϑ_{max}	°C	+70					
Weight (mass)		kg	See table					
Installation			In any position					
Medium			Filtered, lubricated or unlubricated compressed air					
Lubrication			Oil mist lubrication compatible with Buna N					
Material: Housing			Anodized aluminium profile					
Material: Front cover			Ø20 - Ø40 brass, Ø50, 63 Aluminium					
Material: Rear cover			Aluminium					
Material: Piston rod			Stainless steel					
Material: Seal			Oil resistant rubber					
Pneumatic Characteristics								
Nominal pressure	p_n	bar	6					
Operating pressure range	p_{min} p_{max}	bar bar	1 10					
Piston diameter		mm	20	25	32	40	50	63
Port size			M5	G1/8	G1/8	G1/8	G1/8	G1/8
Piston rod diameter		mm	10	12	12	16	20	20
Stroke length		mm	See order instructions					

Weight (mass) kg		
Type	Weight (kg)	Weight per further 100 mm stroke length
SZV 6020/10	0,22	0,024
SZV 6025/10	0,28	0,036
SZV 6032/10	0,35	0,046
SZV 6040/10	0,48	0,065
SZV 6050/10	0,65	0,090
SZV 6063/10	1,20	0,115

Special versions:
- with non-standard stroke lengths
- with through piston rod

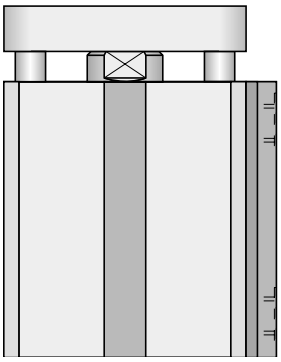

For cylinder switches see 2.90.040E, 2.90.041E

Data Sheet No. 2.13.004E-1

A1P327E00DX00X

The right to introduce technical modifications is reserved

HOERBIGER ORIGA

Dimensions

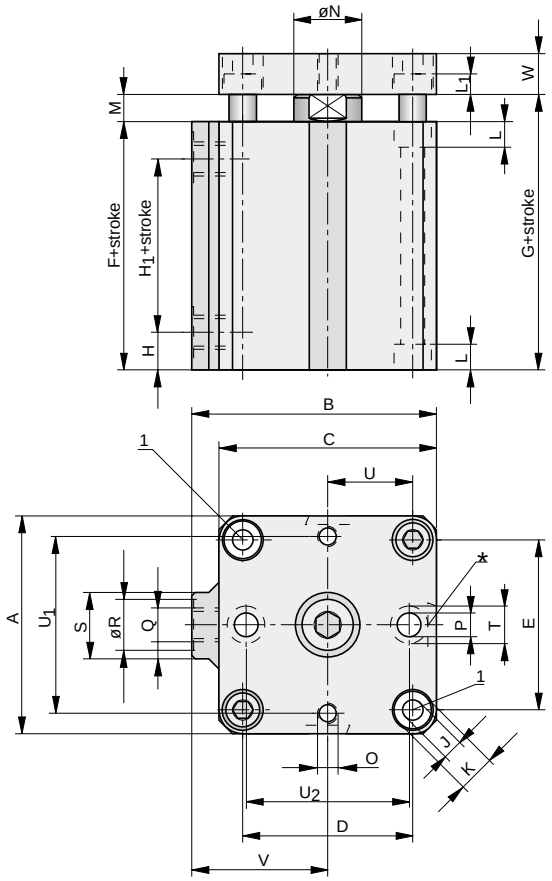

* are omitted for cyl. Ø 20 mm
1) Mounting holes cylinders

Order Instructions

Cyl.Ø	Order Instructions Type	Order No.
20	**SZV 6020/..**	**PA 67370-....**
25	**SZV 6025/..**	**PA 67380-....**
32	**SZV 6032/..**	**PA 58190-....**
40	**SZV 6040/..**	**PA 59100-....**
50	**SZV 6050/..**	**PA 60130-....**
63	**SZV 6063/..**	**PA 61080-....**

Complete stroke (mm)
length

Complete stroke length (4-digit)
z.B. 0025

Standard Stroke Lengths

Cyl.Ø	Stroke length (mm)
20, 25	5, 10, 25, 50
32, 40	5, 10, 25, 50, 80
50, 63	10, 25, 50, 80
Further stroke lengths on request	

Dimension Table (mm)

Cyl.Ø	A	B	C	D	E	$F_{+stroke}$	$G_{+stroke}$	H	$H_{1+stroke}$	ØJ	ØK	L	L_1
20	32	34	32	22	22	36	42	11	14	4,5	7,5	4,8	5
25	37	44	39	28	26	38,5	45	11,5	15,5	4,5	7,5	4,8	5
32	45	52	48	36	32	39	45,5	9	20,5	5,5	10	5,8	6
40	55	59	55	41	41	42	48	9	24	6,7	11	6,8	6
50	64	72	64	50	50	45	53	11	23	6,7	11,5	6,8	7
63	80	88	80	62	62	52,5	60,5	12	28,5	8,5	15	8,3	9

Cyl.Ø	M	ØN	ØO	P	Q	ØR	S	ØT	U	U_1	U_2	V	W
20	6	10	M4	4,5	M5	8	11	7,5	11	22	22	18	8
25	6,5	12	M4	4,5	G1/8	15	19	8	14	26	28	24,5	8
32	6,5	12	M5	5,5	G1/8	15	19	10	18	32	36	28	10
40	6	16	M5	5,5	G1/8	15	19	10	20,5	40	40	31,5	10
50	8	20	M6	6,8	G1/8	15	19	11	25	50	50	40	12
63	8	20	M6	9	G1/8	15	23	15	31	62	62	48	12

Compact Cylinder

ø 32-63 mm

Single acting

Series SZK ....

SZK 3...

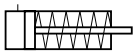

Characteristics according to VDI 3294			Pressures quoted as gauge pressure		
Characteristics	Symbol	Unit	Description		
General Features					
Type			Compact cylinder		
Series			SZK		
System			Single acting		
Mounting			Piston-Ø 32: 2 screws Piston-Ø 50-63: 4 screws see drawing for size dimensions		
Ambient temperature range	ϑ_{min} ϑ_{max}	°C °C	-10 +70	Note: When using below freezing	
Medium temperature range	ϑ_{max}	°C	+70	point (°C), please contact us for advice.	
Weight (mass)		kg	See table for details		
Installation			In any position		
Medium			Filtered, lubricated or unlubricated compressed air		
Lubrication			Oil mist lubrication compatible with Buna N		
Material: Housing			Anodized aluminium profile		
Material: Cover, top			Aluminium, brass		
Material: Piston rod			Stainless steel		
Material: Seal			Oil resistant rubber		
Pneumatic Characteristics					
Nominal pressure	p_n	bar	6		
Operating pressure range	p_{max}	bar	10		
Piston diameter		mm	32	50	63
Port size			G1/8	G1/8	G1/8
Piston rod diameter		mm	12	16	16
Stroke length*)		mm	5, 10	10	10
Spring return force	max	N	53	173	254

*) Further stroke lengths on request

Weight (mass) kg	
Type	Weight (kg)
SZK 3032/5	0,170
SZK 3032/10	0,200
SZK 3050/10	0,450
SZK 3063/10	0,800

Compact cylinders are especially suitable for short stroke clamping tasks

- minimum space requirements
- high clamping forces
- fast response times

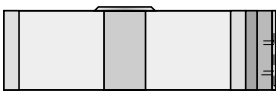

A1P454E00JZ00X

The right to introduce technical modifications is reserved

HOERBIGER ORIGA

Dimensions
Piston rod diameter 32-63 mm

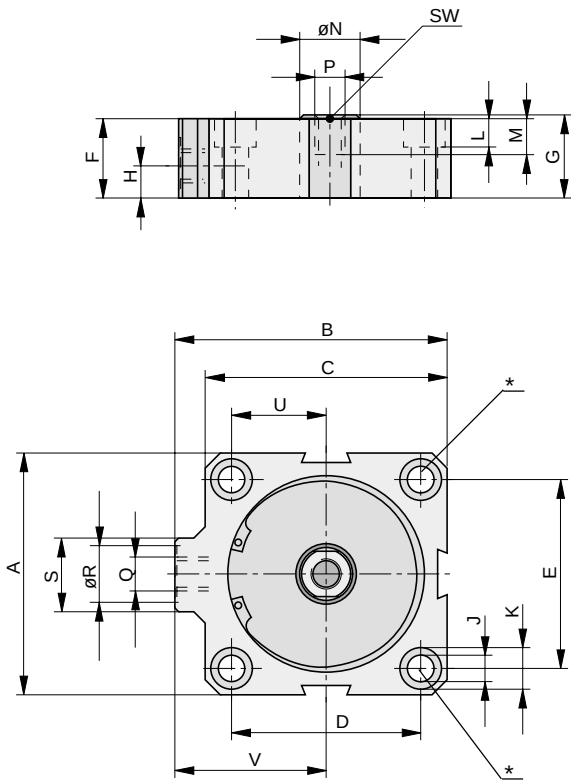

* are omitted for cyl. Ø 32 mm

Dimension Table

Type	A	B	C	D	E	F	G	H	J	K
SZK 3032/5	45	52	48	-	32	27	28	8,5	5,5	10
SZK 3032/10	45	52	48	-	32	32	33	8,5	5,5	10
SZK 3050/10	64	72	64	50	50	30	31	8,5	6,7	11
SZK 3063/10	80	88	80	62	62	35	36	8,5	8,5	14

Type	L	M	ØN	Q	P	ØR	S	U	V	SW
SZK 3032/5	5,7	12	12	G1/8	M6	15	19	18	28	10
SZK 3032/10	5,7	12	12	G1/8	M6	15	19	18	28	10
SZK 3050/10	6,8	12	16	G1/8	M8	15	19	25	40	13
SZK 3063/10	8,3	12	16	G1/8	M8	15	23	31	48	13

Order Instructions

System	Symbol	Piston-Ø	Stroke	Order Instruction Type	Order No.
Single acting	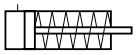	32	5	**SZK 3032/5**	**PD 35344-0005**
		32	10	**SZK 3032/10**	**PD 35344-0010**
		50	10	**SZK 3050/10**	**PD 35331-0010**
		63	10	**SZK 3063/10**	**PD 35346-0010**

Compact Cylinder

ø 12-100 mm

Single acting without cushioning for contactless position sensing

Series SZ ....

SZ 7...

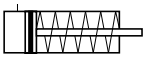

Characteristics according to VDI 3294			Pressures quoted as gauge pressure				
Characteristics	Symbol	Unit	Description				
General Features							
Type			Compact cylinder				
Series			SZ 7000				
System			Single acting for contactless position sensing				
Mounting			4 Mounting screws (see drawing for size dimensions)				
Ambient temperature range	ϑ_{min} ϑ_{max}	°C °C	-10 +70	Note: When using below freezing			
Medium temperature range	ϑ_{max}	°C	+70	point (°C), please contact us for advice.			
Weight (mass)		kg	See table for details				
Installation			In any position				
Medium			Filtered, lubricated or unlubricated compressed air				
Lubrication			Oil mist lubrication compatible with Buna N				
Material: Housing			Anodized aluminium profile				
Material: Cover, top			Ø12-Ø40 brass, Ø50-Ø100 Aluminium				
Material: Cover, bottom			Aluminium				
Material: Piston rod			Stainless steel				
Material: Seal			Oil resistant rubber				
Pneumatic Characteristics							
Nominal pressure	p_n	bar	6				
Operating pressure range	p_{max}	bar	10				
Piston diameter		**mm**	**12**	**16**	**20**	**25**	**32**
Port size			M5	M5	M5	G1/8	G1/8
Piston rod diameter		mm	6	8	10	12	12
Piston diameter		**mm**	**40**	**50**	**63**	**80**	**100**
Port size			G1/8	G1/8	G1/8	G1/4	G1/4
Piston rod diameter			16	20	20	25	32
Standard stroke length		mm	See Order Instructions				

Weight (mass) kg		
Type	Weight (kg)	Weight per additional 10mm stroke length
SZ 7012/10	0,05	0,013
SZ 7016/10	0,08	0,018
SZ 7020/10	0,11	0,022
SZ 7025/10	0,16	0,033
SZ 7032/10	0,23	0,042
SZ 7040/10	0,35	0,059
SZ 7050/10	0,50	0,080
SZ 7063/10	0,90	0,108
SZ 7080/10	1,30	0,138
SZ 7100/10	2,10	0,213

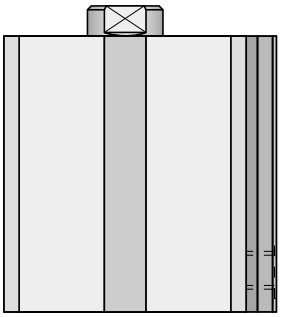

For double acting compact cylinder see 2.14.011E
For cylinder switches see 2.90.040E, 2.90.041E

A1P380E00JZ00X

The right to introduce technical modifications is reserved

HOERBIGER ORIGA

Spring Return Force in N*

Stroke length (mm)	Fmin (N)									
	Ø12	Ø16	Ø20	Ø25	Ø32	Ø40	Ø50	Ø63	Ø80	Ø100
5	8	15	23	26	38	48	-	-	-	-
10	6	12	19	21	28	38	70	90	114	138
25	-	11	19	20	28	38	48	67	90	120

* theoretical value

Dimensions

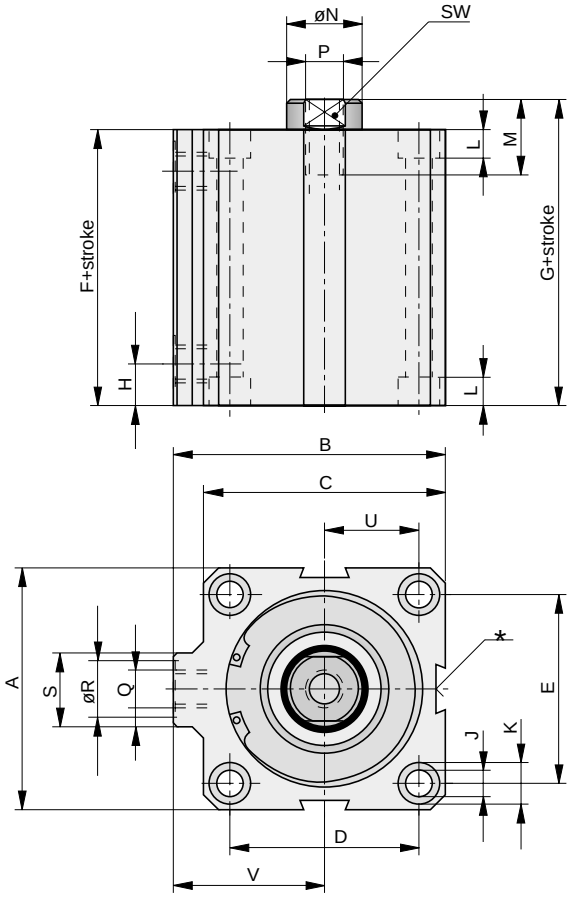

* is omitted for cyl. Ø12 to 20 mm

Order Instructions

Cyl.Ø	Order Instructions Type	Order No.
12	**SZ 7012/..**	**PA 67330-....**
16	**SZ 7016/..**	**PA 67340-....**
20	**SZ 7020/..**	**PA 67350-....**
25	**SZ 7025/..**	**PA 67360-....**
32	**SZ 7032/..**	**PA 58160-....**
40	**SZ 7040/..**	**PA 59070-....**
50	**SZ 7050/..**	**PA 60140-....**
63	**SZ 7063/..**	**PA 61090-....**
80	**SZ 7080/..**	**PA 62100-....**
100	**SZ 7100/..**	**PA 63010-....**

Complete stroke length (mm)

Complete stroke length (4 digit) e.g. 0025

Standard Stroke Lengths

Cyl.Ø	Stroke lengths (mm)
12	5, 10
16, 20, 25, 32, 40	5, 10, 25
50, 63, 80, 100	10, 25,

Dimensions (mm)

Cylinder Ø	Stroke (mm)	A	B	C	D	E	F +stroke	G +stroke	H	ØJ	ØK
12		23	27	25	17,2	13	34	38,5	10	4	6
16	5, 10	28	30	28	20	20	34,5	40	10	4	6
	25						44,5	50			
20	5, 10	32	34	32	22	22	36	42	11	4,5	7,5
	25						46	52			
25	5, 10	37	44	39	28	26	38,5	45	11,5	4,5	7,5
	25						48,5	55			
32	5, 10	45	52	48	36	32	39	45,5	11,5	5,5	10
	25						44	50,5			
40	5, 10	55	59	55	41	41	42	48	12,5	6,7	11
	25						47	53			
50	10, 25	64	72	64	50	50	45	53	13,5	6,7	11
63	10, 25	80	88	80	62	62	52,5	60,5	15,5	8,5	14
80	10, 25	94	104	94	73	73	57	66	16	8,5	14
100	10, 25	117	125,5	117	90,5	90,5	58,5	68,5	15,5	10,5	18

Cylinder Ø	L	M	ØN	P	Q	ØR	S	U	V	SW
12	3,4	6	6	M3	M5	8	11	8,6	14,5	5
16	3,4	8	8	M4	M5	8	11	10	16	6
20	4,8	8	10	M5	M5	8	11	11	18	8
25	4,8	12	12	M6	G1/8	15	19	14	24,5	10
32	5,8	12	12	M8	G1/8	15	19	18	28	10
40	6,8	12	16	M8	G1/8	15	19	20,5	31,5	13
50	6,8	17,5	20	M10	G1/8	15	19	25	40	17
63	8,3	17,5	20	M12	G1/8	15	23	31	48	17
80	8,3	25	25	M16	G1/4	19	23	36,5	57	22
100	11	28	32	M20	G1/4	19	23	45,25	67	27

Compact Cylinder

ø 12-100 mm

Double acting without cushioning for contactless position sensing

Series SZ ....

SZ 6...

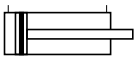

Characteristics according to VDI 3294			Pressures quoted as gauge pressure				
Characteristics	Symbol	Unit	Description				
General Features							
Type			Compact cylinder				
Series			SZ 6000				
System			Double acting for contactless position sensing				
Mounting			4 Mounting screws (see drawing for size dimensions)				
Ambient temperature range	ϑ_{min} ϑ_{max}	°C °C	-10 +70	Note: When using below freezing			
Medium temperature range	ϑ_{max}	°C	+70	point (°C), please contact us for advice.			
Weight (mass)		kg	See table for details				
Installation			In any position				
Medium			Filtered, lubricated or unlubricated compressed air				
Lubrication			Oil mist lubrication compatible with Buna N				
Material: Housing			Anodized aluminium profile				
Material: Cover, top			Ø12-Ø40 brass, Ø50-Ø100 Aluminium				
Material: Cover, bottom			Aluminium				
Material: Piston rod			Stainless steel				
Material: Seal			Oil resistant rubber				
Pneumatic Characteristics							
Nominal pressure	p_n	bar	6				
Operating pressure range	p_{min} p_{max}	bar bar	1 10				
Piston diameter		**mm**	**12**	**16**	**20**	**25**	**32**
Port size			M5	M5	M5	G1/8	G1/8
Piston rod diameter		mm	6	8	10	12	12
Piston diameter		**mm**	**40**	**50**	**63**	**80**	**100**
Port size			G1/8	G1/8	G1/8	G1/4	G1/4
Piston rod diameter			16	20	20	25	32
Standard stroke length		mm	See Order Instructions				

Special versions:
- with non-standard stroke lengths
- with through piston rod
- non-rotating version available on request

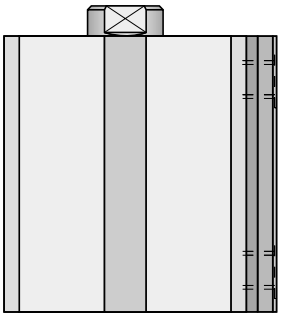

Weight (mass) kg

Type	Weight (kg)	Weight per additional 10mm stroke length
SZ 6012/10	0,05	0,013
SZ 6016/10	0,08	0,018
SZ 6020/10	0,11	0,022
SZ 6025/10	0,16	0,033
SZ 6032/10	0,23	0,042
SZ 6040/10	0,35	0,059
SZ 6050/10	0,50	0,080
SZ 6063/10	0,90	0,108
SZ 6080/10	1,30	0,138
SZ 6100/10	2,10	0,213

For double acting compact cylinder see 2.14.010E
For cylinder switches see 2.90.040E, 2.90.041E2.90.040E, 2.90.041E

A1P380E00DX00X

The right to introduce technical modifications is reserved

HOERBIGER ORIGA

Dimensions

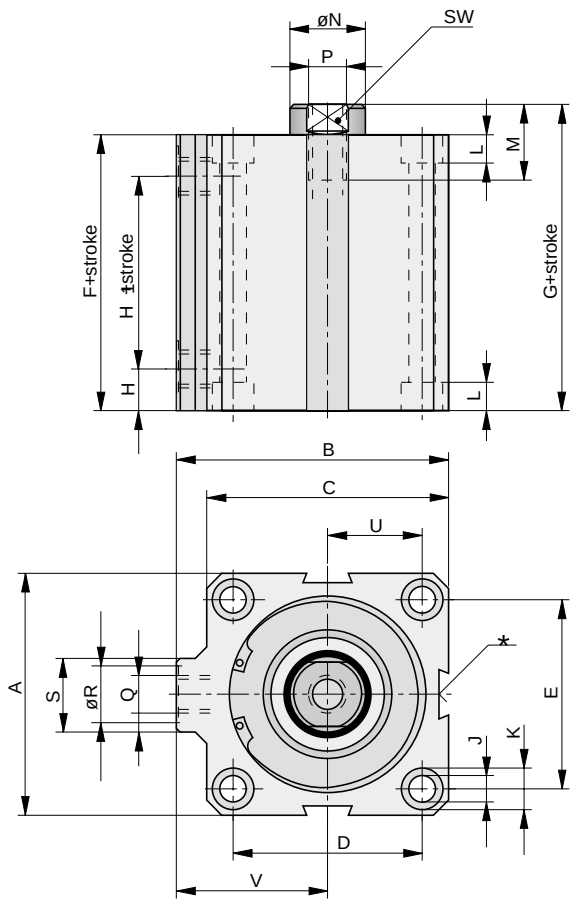

* is omitted for cyl. Ø12 to 20 mm

Order Instructions

Cyl.Ø	Order Instructions Type	Order No.
12	**SZ 6012/..**	**PA 67290-....**
16	**SZ 6016/..**	**PA 67300-....**
20	**SZ 6020/..**	**PA 67310-....**
25	**SZ 6025/..**	**PA 67320-....**
32	**SZ 6032/..**	**PA 58150-....**
40	**SZ 6040/..**	**PA 59060-....**
50	**SZ 6050/..**	**PA 60150-....**
63	**SZ 6063/..**	**PA 61100-....**
80	**SZ 6080/..**	**PA 62090-....**
100	**SZ 6100/..**	**PA 63000-....**

Complete stroke length (mm)

Complete stroke length (4digit) e.g. 0025

Standard Stroke Lengths

Cyl.Ø	Stroke lengths (mm)
12	5, 10
16	5, 10, 25
20,25	5, 10, 25, 50
32, 40	5, 10, 25, 50, 80
50-100	10, 25, 50, 80
Further stroke lengths available upon request	

Dimension Table (mm)

Cylinder Ø	A	B	C	D	E	F +stroke	G +stroke	H	H_1 +stroke	ØJ	ØK
12	23	27	25	17,2	13	34	38,5	10	14	3,4	6
16	28	30	28	20	20	34,5	40	10	14	3,4	6
20	32	34	32	22	22	36	42	11	14	4,5	7,5
25	37	44	39	28	26	38,5	45	11,5	15,5	4,5	7,5
32	45	52	48	36	32	39	45,5	11,5	16	5,5	10
40	55	59	55	41	41	42	48	12,4	17	6,7	11
50	64	72	64	50	50	45	53	13,5	18	6,7	11
63	80	88	80	62	62	52,5	60,5	15,5	21,5	8,5	14
80	94	104	94	73	73	57	66	16	25	8,5	14
100	117	125,5	117	90,5	90,5	58,5	68,5	15,6	27,5	10,5	18

Cylinder Ø	L	M	ØN	P	Q	ØR	S	U	V	SW
12	3,4	6	6	M3	M5	8	11	8,6	14,5	5
16	3,4	8	8	M4	M5	8	11	10	16	6
20	4,8	8	10	M5	M5	8	11	11	18	8
25	4,8	12	12	M6	G1/8	15	19	14	24,5	10
32	5,8	12	12	M8	G1/8	15	19	18	28	10
40	6,8	12	16	M8	G1/8	15	19	20,5	31,5	13
50	6,8	17,5	20	M10	G1/8	15	19	25	40	17
63	8,3	17,5	20	M12	G1/8	15	23	31	48	17
80	8,3	25	25	M16	G1/4	19	23	36,5	57	22
100	11	28	32	M20	G1/4	19	23	45,25	67	27

Compact Cylinder

ø 12-100 mm

with through piston rod

Double acting without cushioning for contactless position sensing

Series SZD ....

SZD 6...

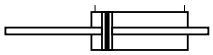

Characteristics according to VDI 3294			Pressures quoted as gauge pressure				
Characteristics		Symbol	Unit	Description			
General Features							
Type				Compact cylinder			
Series				SZD 6...			
System				Double acting with through piston rod, for contactless position sensing			
Mounting				4 Mounting screws (see drawing for dimensions)			
Ambient temperature range		ϑ_{min} ϑ_{max}	°C °C	-10 +70	Note: When using below freezing		
Medium temperature range		ϑ_{max}	°C	+70	point (°C), please contact us for advice.		
Weight (mass)			kg	See table for details			
Installation				In any position			
Medium				Filtered, lubricated or unlubricated compressed air			
Lubrication				Oil mist lubrication compatible with Buna N			
Material	Housing			Anodized aluminium profile			
	Cover, top			Ø12-Ø40 brass, Ø50-Ø100 Aluminium			
	Piston rod			Stainless steel			
	Seal			Oil resistant rubber			
Pneumatic Characteristics							
Nominal pressure		p_n	bar	6			
Operating pressure range at Piston diameter		**Ø**	**mm**	**12**	**16, 20**	**25-40**	**50-100**
		p_{min}	bar	2,5	2	1,5	1
		p_{max}	bar	10			
Piston diameter			**mm**	**12**	**16**	**20**	**25**	**32**
Port size				M5	M5	M5	G1/8	G1/8
Piston rod diameter			mm	6	8	10	12	12
Piston diameter			**mm**	**40**	**50**	**63**	**80**	**100**
Port size				G1/8	G1/8	G1/8	G1/4	G1/4
Piston rod diameter				16	20	20	25	32
Standard stroke length			mm	See Order Instructions			

Special version:
- with non-standard stroke lengths

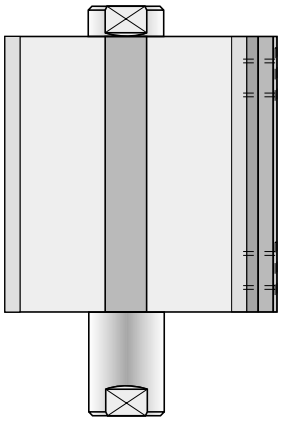

Weight (mass) kg		
Type	Weight (kg)	Weight per additional 10mm stroke length
SZD 6012/10	0,06	0,015
SZD 6016/10	0,10	0,022
SZD 6020/10	0,14	0,028
SZD 6025/10	0,20	0,042
SZD 6032/10	0,28	0,051
SZD 6040/10	0,43	0,075
SZD 6050/10	0,64	0,104
SZD 6063/10	1,06	0,133
SZD 6080/10	1,56	0,176
SZD 6100/10	2,54	0,276

For cylinder switches see 2.90.040E, 2.90.041E

A1P458E00DX00X

The right to introduce technical modifications is reserved

HOERBIGER ORIGA

Dimensions

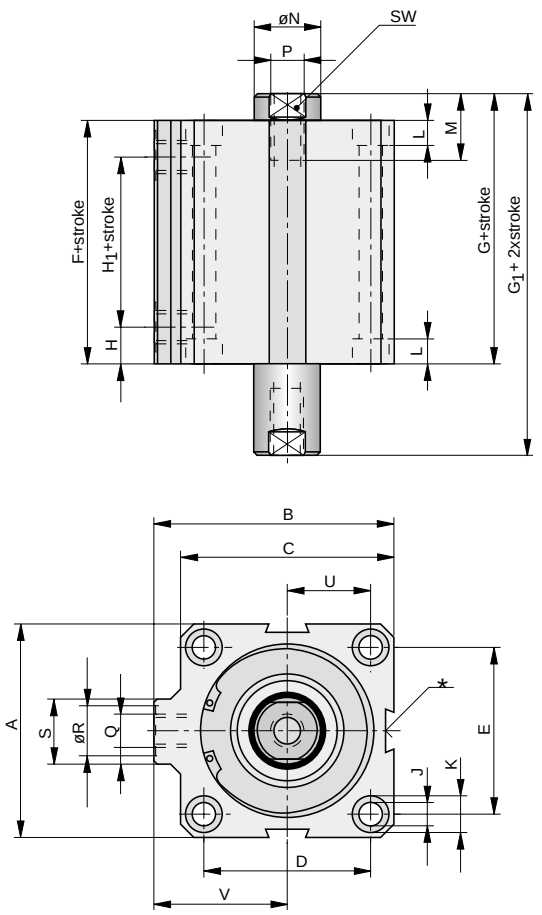

* is omitted for cyl. Ø12 to 20 mm

Order Instructions

Cyl.Ø	Order Instructions Type	Order No.
12	**SZD 6012/..**	**PA 67610-....**
16	**SZD 6016/..**	**PA 67620-....**
20	**SZD 6020/..**	**PA 67630-....**
25	**SZD 6025/..**	**PA 67640-....**
32	**SZD 6032/..**	**PA 58230-....**
40	**SZD 6040/..**	**PA 59150-....**
50	**SZD 6050/..**	**PA 60220-....**
63	**SZD 6063/..**	**PA 61160-....**
80	**SZD 6080/..**	**PA 62120-....**
100	**SZD 6100/..**	**PA 63030-....**

Complete stroke length (mm)

Complete stroke length (4digit) e.g. 0025

Standard Stroke Lengths

Cyl.Ø	Stroke lengths (mm)
12	5, 10
16	5, 10, 25
20,25	5, 10, 25, 50
32, 40	5, 10, 25, 50, 80
50-100	10, 25, 50, 80
Further stroke lengths available upon request	

Dimension Table (mm)

Cylinder Ø	A	B	C	D	E	F +stroke	G +stroke	G_1 +2xstroke	H	H_1 +stroke	ØJ
12	23	27	25	17,2	13	34	38,5	43	10	14	3,4
16	28	30	28	20	20	34,5	40	45,5	10	14	3,4
20	32	34	32	22	22	36	42	48	11	14	4,5
25	37	44	39	28	26	38,5	45	51,5	11,5	15,5	4,5
32	45	52	48	36	32	39	45,5	52	11,5	16	5,5
40	55	59	55	41	41	42	48	55	12,5	17	6,7
50	64	72	64	50	50	45	53	61	13,5	18	6,7
63	80	88	80	62	62	52,5	60,5	68,5	15,5	21,5	8,5
80	94	104	94	73	73	57	66	75	16	25	8,5
100	117	125,5	117	90,5	90,5	58,5	68,5	78,5	15,5	27,5	10,5

Cylinder Ø	ØK	L	M	ØN	P	Q	ØR	S	U	V	SW
12	6	3,4	6	6	M3	M5	8	11	8,6	14,5	5
16	6	3,4	6	8	M4	M5	8	11	10	16	6
20	7,5	4,6	8	10	M5	M5	8	11	11	18	8
25	7,5	4,6	12	12	M6	G1/8	15	19	14	24,5	10
32	10	5,8	12	12	M8	G1/8	15	19	18	28	10
40	11	6,8	12	16	M8	G1/8	15	19	20,5	31,5	13
50	11	6,8	17,5	20	M10	G1/8	15	19	25	40	17
63	14	8,3	17,5	20	M12	G1/8	15	23	31	48	17
80	14	8,3	25	25	M16	G1/4	19	23	36,5	57	22
100	18	11	28	32	M20	G1/4	19	23	45,25	67	27

Clamping Cylinder

ø 25 and 35 mm

Single acting without cushioning

Series DZS....

DZS3...

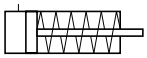

Characteristics according to VDI 3294 Pressures quoted as gauge pressure

Characteristics		Symbol	Unit	Description	
General Features					
Type				Clamping cylinder	
Series				DZS	
System				Single acting with spring return	
Mounting				See drawing	
Tube connection				Thread	
Ambient temperature range		ϑ_{min} ϑ_{max}	°C °C	-25 +80	Note: When using below freezing
Medium temperature range		ϑ_{max}	°C	+80	point (°C) it is necessary to consult us
Weight (mass)			kg	DZS3025: 0.2; DZS3035: 0.4	
Installation				In any position	
Medium				Filtered and lubricated air	
Lubrication				Oil mist lubrication compatible with Buna N	
Material	Tube			Aluminium	
	Piston			Stainless steel	
	Housing			Special pressed material, with a high degree of resistance to impact, water and oil resistant	
	Seals			Oil resistant rubber	
Pneumatic Characteristics					
Nominal pressure		p_n	bar	6	
Operating pressure range		p_{min} p_{max}	bar bar	1 8	
Piston diameter			mm	25	35
Port size				G 1/4	
Piston rod diameter			mm	Ø8	Ø10
Stroke length			mm	25	50
Thrust at 6 bar			N	240	520

Dimensions for Mounting A

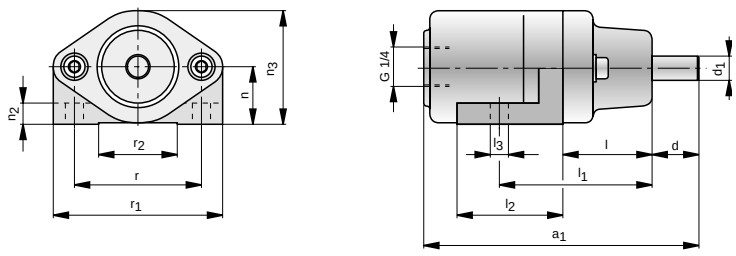

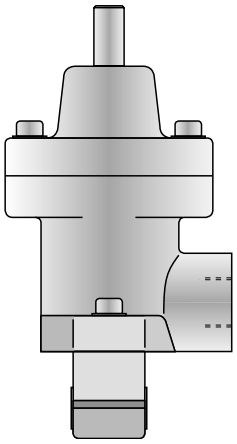

Dimension Table (mm) for Mounting A

Type	a_1	d	Ød_1	l	l_1	l_2	Øl_3	n	n_2	n_3	r	r_1	r_2
DZS3025A/25	91	16	8	29	50	35	5,2	19	7	37	42	56	26
DZS3035A/50	125	18	10	34	58	40	5,2	25	8	49,5	55	70	36

Order Instructions: **DZS3025A/25 KY 9523**
DZS3035A/50 KY 9526

For product group list see 2.01.001E

Data Sheet No. 2.15.001E-1

A1P302E00DX00X

The right to introduce technical modifications is reserved

HOERBIGER ORIGA

Dimensions for Mounting B (pivot block for mounting D)

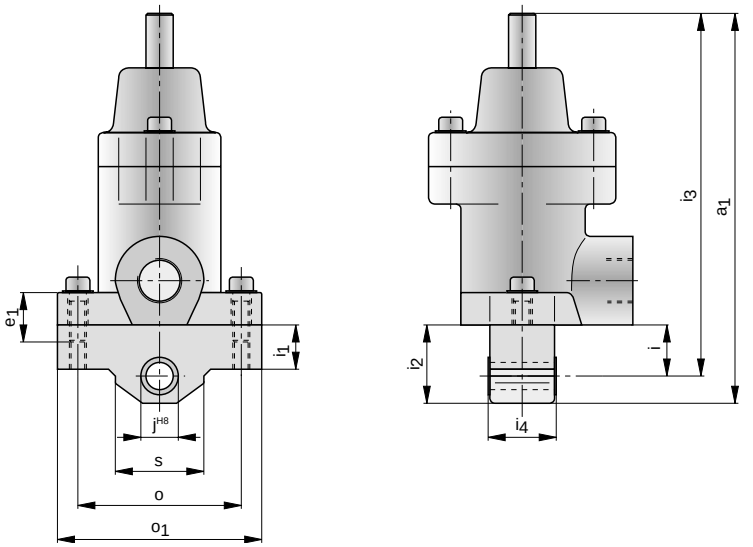

Dimension Table (mm) for Mounting B

Order Instructions Type	Order No.	a_1	e	e_1	i	i_1	i_2	i_3	i_4	Øj^{H8}	o	o_1	s
DZS3025B/25	**PD 24145**	115	M 5	15	11,5	13	23	104	19	8	48	60	26
DZS3035B/50	**PD 24146**	157	M 5	18	14	15	28	143	20	10	60	74	30

Dimensions for Mounting C

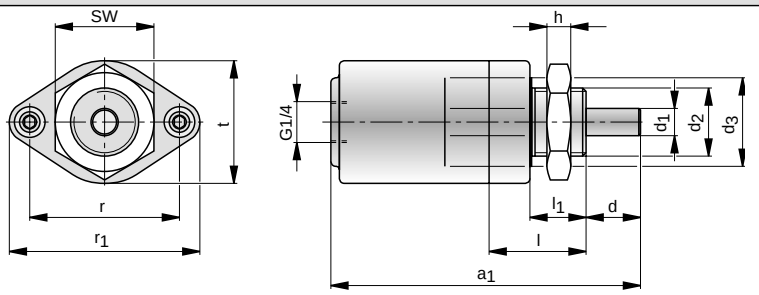

Dimension Table (mm) for Mounting C

Order Instructions Type	Order No.	a_1	d	Ød_1	d_2	d_3	h	l	l_1	r	r_1	t	SW
DZS3025C/25	**KY 9524**	91	16	8	M20x1,5	24	7	29	16	42	56	36	30
DZS3035C/50	**KY 9527**	125	18	18	M26x1,5	30	8	34	19	55	70	49	36

Dimensions for Mounting D

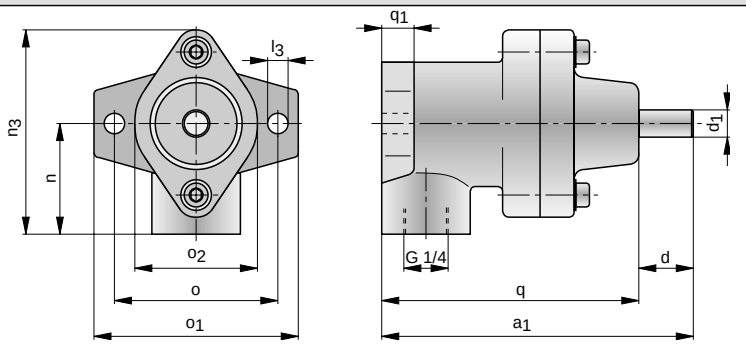

Dimension Table (mm) for Mounting D

Order Instructions Type	Order No.	a_1	d	Ød_1	l_3	n	n_3	o	o_1	o_2	q	q_1
DZS3025D/25	**KY 9525**	92	16	8	5,2	32	60	48	60	36	76	9
DZS3035D/50	**KY 9281**	129	18	10	5,2	37,5	72,5	60	74	49	111	11

Cylinder

ø 32-63 mm

Versions:
Double acting without cushioning
Double acting with adjustable cushioning for contactless position sensing

Series R ....-...
RK ....-...

R 5000

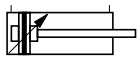

R (RK) 6000

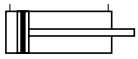

Characteristics according to VDI 3292			Pressures quoted as gauge pressure			
Characteristics		Symbol	Unit	Description		
General Features						
Type				Round cylinder		
Series				R, RK		
System	R (RK) 6...			Double acting without cushioning		
	R 5...			Double acting with cushioning		
Mounting				See drawings		
Tube connection				Thread		
Ambient temperature range		ϑ_{min} ϑ_{max}	°C °C	-10 +70	Note: When using below freezing	
Medium temperature range		ϑ_{max}	°C	+70	point (°C), please contact us for advice.	
Weight (mass)			kg	See table		
Installation				In any position		
Medium				Filtered and lubricated compressed air		
Lubrication				Oil mist lubrication compatible with NBR and PU		
Material	Cylinder barrel			Anodized aluminium		
	Front/rear covers			aluminium		
	Piston rod			Stainless steel		
Pneumatic Characteristics						
Nominal pressure		p_n	bar	6		
Operating pressure range		p_{min} p_{max}	bar bar	1 10		
Piston diameter			mm	32	40	50	63
Port size				G 1/8	G1/4	G1/4	G 3/8
Piston rod diameter			mm	12	16	20	20
Stroke length				For max. stroke length see piston rod load diagram 2.05.002E		
Piston force and air consumption				See data sheet 2.05.001E		
Cushioning (only for series R 5000)				At both ends, progressively adjustable		
Cushioned stroke			Cyl.-Ø	32	40	50	63
(series R 5000)			mm	22	27	28	28

Weight (mass) kg								
Mounting	Cylinder diameter 32		40		50		63	
	*1	*2	1	2	1	2	1	2
Basic cylinder	0,55	0,15	0,94	0,25	1,40	0,30	1,90	0,40
RA (1 bracket)	0,10		0,19		0,29		0,36	
RC	0,10		0,19		0,29		0,36	
RB	0,17		0,29		0,48		0,70	
RE	0,15		0,26		0,38		0,59	

*1 = Weight for cylinder with 100 mm stroke
2 = Weight for every additional 100 mm stroke length

Universal cylinder for mounting by a thread on the cylinder covers. Pivot mounted on the front and rear cylinder covers.

The delivery includes:
1 Cylinder
1 Hexagon nut for piston rod thread
1 Grooved nut for cylinder mountings

Versions without contactless position sensing on request.

For product group list see 2.01.001E
For cylinder switches see 2.90.040E, 2.90.041E

A1P401E00ABD40X

The right to introduce technical modifications is reserved

Dimensions for Cylinder Series R

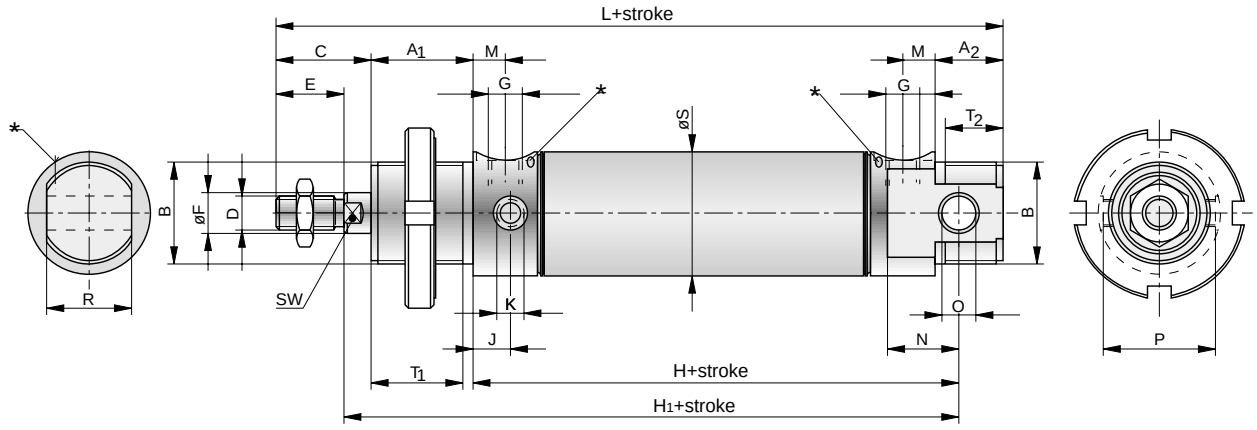

* adjustable end cushioning only for series R 5000

Dimension Table (mm) for Cylinder Series R

Cyl.-Ø	A_1	A_2	B	C	D	E	F	G	H+ stroke	H_1	J	K	L+ stroke	M	N	O	P	R_{h12}	S	T_1	T_2	SW
32	30	19,5	M30x1,5	28	M10	20	12	G1/8	90,5	128,5	11	M8x1	160,5	9,5	21	10	33	25	35	27	16,5	10
40	35	21,5	M38x1,5	34	M12	24	16	G1/4	99,5	144,5	12	M10x1	181,5	11	24	12	40	30	43	32	17,5	14
50	38	25	M45x1,5	44	M16	32	20	G1/4	109,5	159,5	13	M12x1,5	205,5	11	27	14	50	35	54	35	21	17
63	38	24,5	M45x1,5	45	M16	32	20	G3/8	116,5	167,5	13,5	M14x1,5	215,5	12,5	28	16	62	35	67	35	20,5	17

Dimensions for Cylinder Series RK

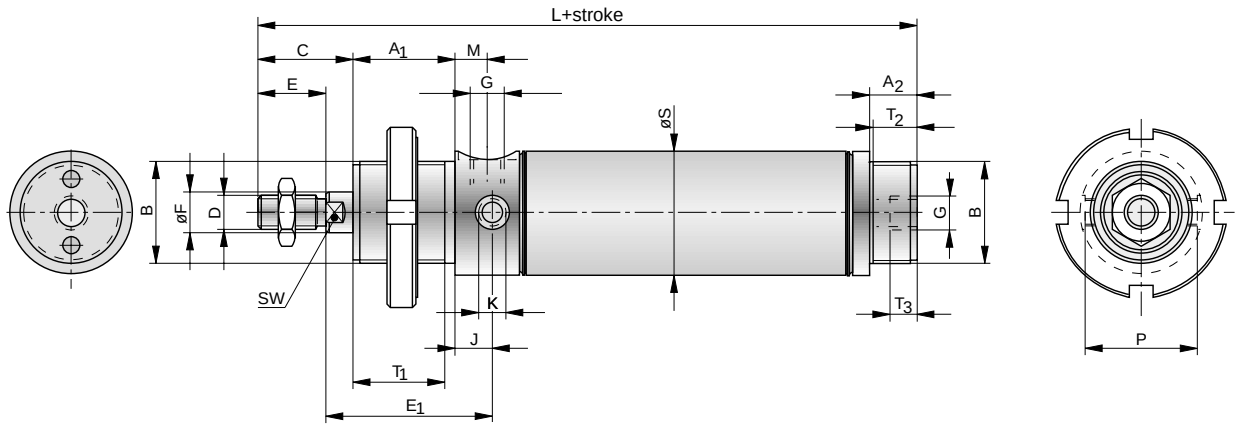

Dimension Table (mm) for Cylinder Series RK

Cyl.-Ø	A_1	A_2	B	C	D	E	E_1	ØF	G	J	K	L+ stroke	M	P	ØS	T_1	T_2	T_3	SW
32	30	14	M30x1,5	28	M10	20	49	12	G1/8	11	M8x1	138,5	9,5	33	35	27	11	8	10
40	35	16	M38x1,5	34	M12	24	57	16	G1/4	12	M10x1	156,5	11	40	43	32	12	12	14
50	38	18	M45x1,5	44	M16	32	63	20	G1/4	13	M12x1,5	179,5	11	50	54	35	14	12	17
63	38	18	M45x1,5	45	M16	32	64,5	20	G3/8	13,5	M14x1,5	186,5	12,5	62	67	35	14	12	17

Foot Mounting Type RA-..

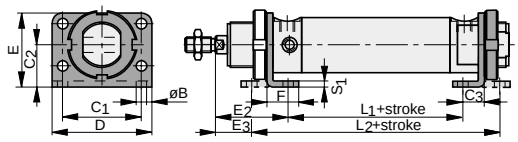

Material: steel, passivated

Dimension Table (mm)

Cyl. Ø	ØB	C_1	C_2	C_3	D	E	E_2	E_3	F	L_1*+ stroke	L_2*+ stroke	S_1
32	6,6	52	28	14	66	49	48	24	21	63	111	4
	6,6	52	28	14	66	49	48	24	21	46,5	94,5	4
40	9	60	33	20	80	58	60	25	30	61	131	5
	9	60	33	20	80	58	60	25	30	41,5	111,5	5
50	9	70	40	20	90	70	64	30	30	70,5	138,5	6
	9	70	40	20	90	70	64	30	30	51,5	119,5	6
63	9	76	45	20	96	80	65	31	30	80	148	6
	9	76	45	20	96	80	65	31	30	57,5	125,5	6

* Dimensions in the grey fields are valid for series RK

Flange Mounting Type RC-..

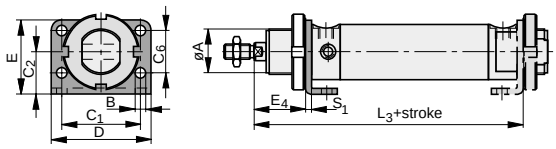

Material: steel, passivated

Dimension Table (mm) for Mounting RC

Cyl. Ø	ØA	B	C_1	C_2	C_6	D	E	E_4	L_3+ stroke	S_1
32	30,1	6,6	52	28	28	66	49	34	125	4
	30,1	6,6	52	28	28	66	49	34	108,5	4
40	38,1	9	60	33	30	80	58	40	141	5
	38,1	9	60	33	30	80	58	40	121,5	5
50	45,1	9	70	40	40	90	70	44	154,5	6
	45,1	9	70	40	40	90	70	44	135,5	6
63	45,1	9	76	45	50	96	80	45	165	6
	45,1	9	76	45	50	96	80	45	142,5	6

Front Trunnion Mounting Type RE-..

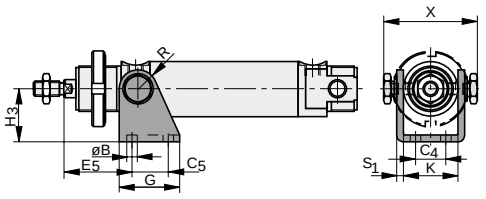

Material: steel, passivated

Dimension Table (mm)

Cyl.-Ø	ØB	C_4	C_5	E_5	G	H_3	K	R	S_1	X
32	6,6	20	24	45	40	35	36,1	12	4	60
40	9	28	30	54	50	40	45,1	13	5	75
50	9	36	34	59	54	45	55,1	14	6	89
63	9	42	35	63,5	65	50	70,1	16	6	109

Rear Trunnion Mounting Type RB-..

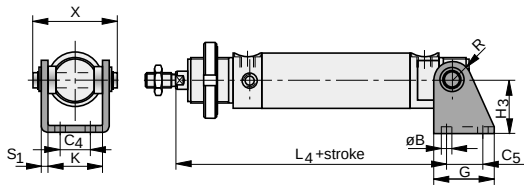

Material: steel, passivated

Dimension Table (mm)

Cyl.-Ø	ØB	C_4	C_5	G	H_3	H	K	L_4+ stroke	R	S_1	X
32	6,6	20	24	40	35	8	36,1	124,5	12	4	58
40	9	28	30	50	40	10	45,1	141,5	13	5	70
50	9	36	34	54	45	10	55,1	155,5	14	6	86
63	9	42	35	65	50	15	70,1	166,5	16	6	100

Piston Rod Clevis to CETOP RP 102 P

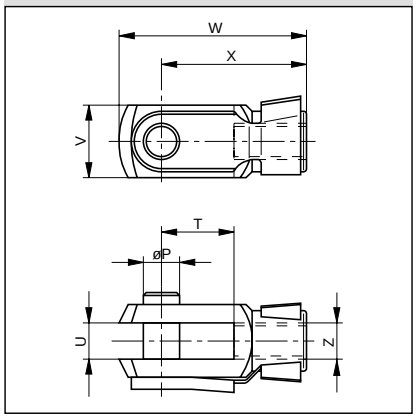

Order Instructions, Dimension Table (mm), Weight

Order Instructions Type	Order No.	Cyl.-Ø	ØP	T	U	V	W	X	Z	Weight (kg)
GK-M10	**KY 6134**	32	10	20	10	20	52	40	M10	0,08
GK-M12	**KY 6138**	40	12	24	12	24	62	48	M12	0,125
GK-M16	**KY 6140**	50, 63	16	32	16	32	83	64	M16	0,30

Material: galvanized steel

Piston Rod Eye to CETOP RP 103 P

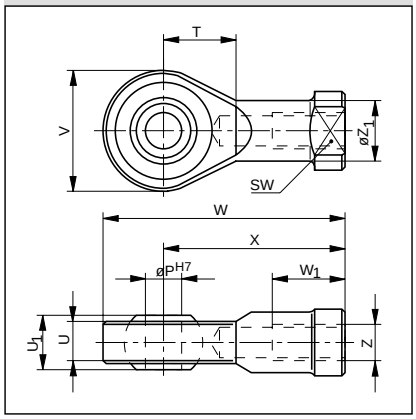

Order Instructions, Dimension Table (mm), Weight

Order Instructions Type	Order No.	to Cyl.-Ø	$Øp^{H7}$	T	U	U_1	V	W	W_1	X	Z	$ØZ_1$	SW	Weight (kg)
GA-M10	**KY 6146**	32	10	15	10,5	14	28	57	20	43	M10	15	17	0,072
GA-M12	**KY 6185**	40	12	17	12	16	32	66	22	50	M12	17,5	19	0,107
GA-M16	**KY 6149**	50, 63	16	22	15	21	42	85	28	64	M16	22	22	0,21

Material: galvanized steel

Compensating Coupling for Piston Rods

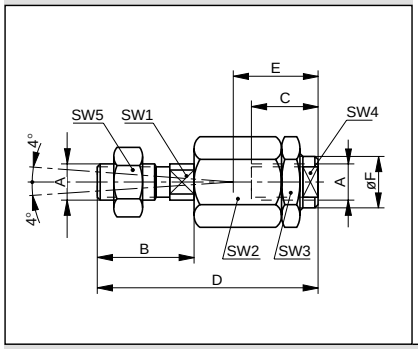

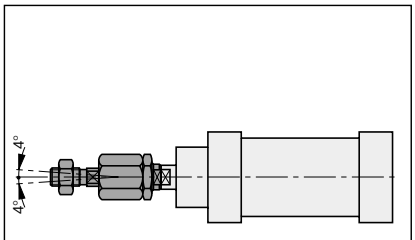

Angular compensation

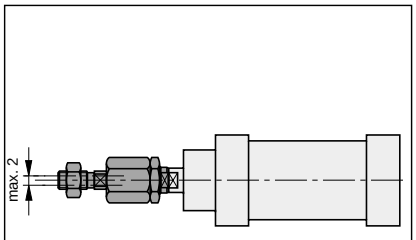

Radial compensation of centre axis

Order Instructions, Dimension Table (mm), Weight

Order Instructions Type	Order No.	A	B	C	D	E	ØF	SW1	SW2	SW3	SW4	SW5	Weight (kg)
AK10	**KY 1128**	M10	20	23	70	31	21,5	12	30	30	19	17	0,218
AK12	**KY 1130**	M12	23	23	67	31	21,5	12	30	30	19	19	0,207
AK16	**KY 1132**	M16	40	32	112	45	33,5	19	41	41	30	30	0,634

Order Instructions

Basic Cylinder (without mountings)

Series	Symbol	Piston-Ø	Order Instructions Type	Order No.
Double acting with adjustable end cushioning for contactless position sensing	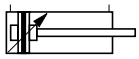	32	**R 5032/....***	**PD 46443-...**
		40	**R 5040/....**	**PD 46445-....**
		50	**R 5050/....**	**PD 46447-....**
		63	**R 5063/....**	**PD 46449-....**
Double acting without adjustable end cushioning for contactless position sensing	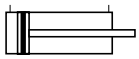	32	**R 6032/....**	**PD 46444-....**
			RK 6032/....	**PA 58220-....**
		40	**R 6040/....**	**PD 46446-....**
			RK 6040/....	**PA 59140-....**
		50	**R 6050/....**	**PD 46448-....**
			RK 6050/....	**PA 60210-....**
		63	**R 6063/....**	**PD 46450-....**
			RK 6063/....	**PA 61150-....**

Complete type designation and order no. with stroke length in mm (4-digits)

Standard stroke lengths: 0025, 0050, 0080, 0100, 0125, 0160, 0200, 0250, 0320, 0400, 0500 delivered preferably

* Magnetic switch mounting by band

Mountings - Accessories

Description	Type	Order No. Ø32	Ø40	Ø50	Ø63
Foot mounting (1 mounting bracket)	**RA 1-..**	**KK 29.302**	**KK 30.302**	**KK 31.302**	**KK 32.302**
Foot mounting (standard version)	**RA 2-..***	**PD 25712**	**PD 25713**	**PD 25714**	**PD 25715**
Flange mounting (1 mounting bracket)	**RC- ..**	**KK 29.302**	**KK 30.302**	**KK 31.302**	**KK 32.302**
Rear trunnion mounting	**RB- ..**	**PD 40390**	**PD 40391**	**PD 40392**	**PD 40393**
Front trunnion mounting	**RE-..**	**PD 40394**	**PD 40395**	**PD 40396**	**PD 40397**

Complete type designation with piston-Ø

Ordering example RA-32 KK 29.302

* consists of 2 mounting brackets and 1 hexagon nut

Cylinder

ø 32-100 mm

NIRO-CYLINDER
to ISO 6431

Versions:
Double acting with adjustable cushioning for contactless position sensing

Series NR ....-...
NRK ....-...

NR (NRK)5000

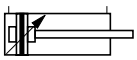

Characteristics according to VDI 3292 Pressures quoted as gauge pressure

Characteristics		Symbol	Unit	Description					
General Features									
Type				Round cylinder					
Series				NR, NRK					
System				Double acting with cushioning					
Mounting				See drawings					
Tube connection				Thread					
Ambient temperature range		ϑ_{min} ϑ_{max}	°C °C	-10 +70	Note: When using below freezing				
Medium temperature range		ϑ_{max}	°C	+70	point (°C), please contact us for advice.				
Weight (mass)			kg	See table					
Installation				in any position					
Medium				Filtered and lubricated compressed air					
Lubrication				Oil mist lubrication compatible with Buna N					
Material	Cylinder barrel			X12 Cr Ni S 18 8 (1.4306)					
	Front/rear covers			X12 Cr Ni S 18 8 (1.4306)					
	Piston rod			X12 Cr Ni S 18 8 (1.4306)					
Pneumatic Characteristics									
Nominal pressure		p_n	bar	6					
Operating pressure range		p_{min} p_{max}	bar bar	1 10					
Piston diameter		p_{max}	bar	10					
Port size				G 1/8	G1/4	G1/4	G 3/8	G 3/8	G 1/2
Piston rod diameter			mm	12	16	20	20	25	25
Stroke length max.				800	800	1000	1000	1500	1500
Piston force and air consumption				See data sheet 2.05.001E					
Cushioning				At both ends, progressively adjustable					
Cushioned stroke			Cyl.-Ø	32	40	50	63	80	100
			mm	22	23	25	27	29	32

Weight (mass) kg

Mounting	Cylinder diameter 32		40		50		63		80		100	
	*1	*2	1	2	1	2	1	2	1	2	1	2
Basic cylinder	1.20	0.25	1.90	0.42	2.60	0.60	4.70	0.70	7.60	1.05	11.90	1.15

*1 = Weight for cylinder with 100 mm stroke
2 = Weight for every additional 100 mm stroke length

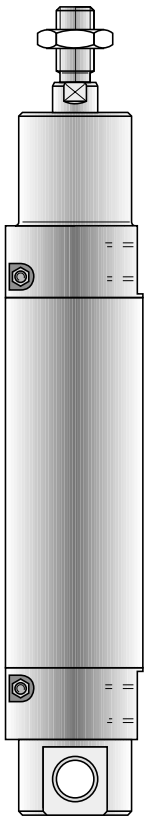

Cylinder for the chemical industry and the food industry.
- With rear trunnion mounting

The delivery includes:
1 Cylinder
1 Hexagon nut for piston rod thread

For product group list see 2.01.001E
For cylinder switches see 2.90.040E, 2.90.041E

Data Sheet No. 2.21.003E-1

A1P529E00IX50X

The right to introduce technical modifications is reserved

HOERBIGER ORIGA

Dimensions for Cylinder Series NR

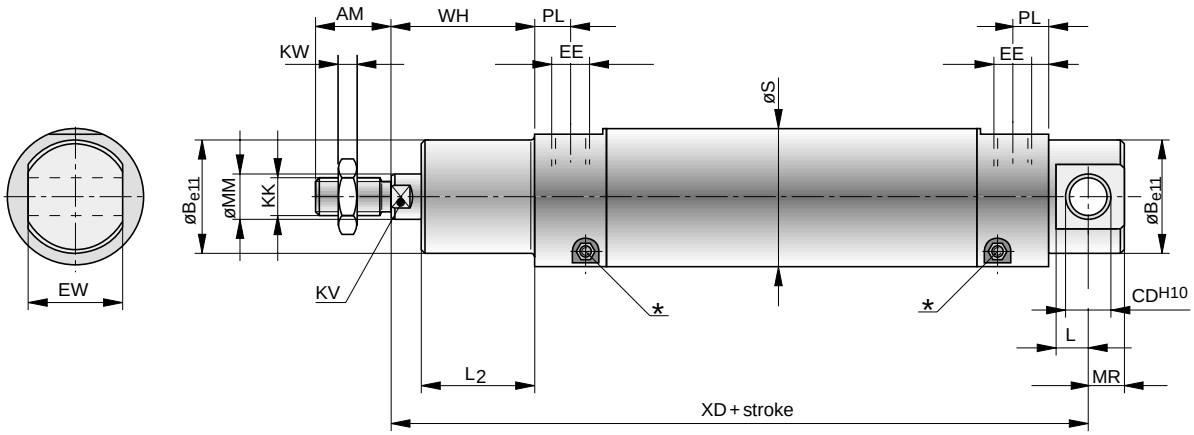

*adjustable end cushioning

Dimension Table (mm) for Cylinder Series NR

Cyl.-Ø	AM	$øB_{e11}$	$øCD^{H10}$	EE	EW	KK	KV	KW	L	L_2	øMM	MR	PL	øS	WH +stroke	XD
32	22	30	10	G1/8	26	M10x1.25	16	5	18	16	12	10	15	36	28	142
40	24	35	12	G1/4	28	M12x1.25	18	6	20	20	16	12	14	45	30	160
50	32	40	12	G1/4	32	M16x1.5	24	8	25	24	20	16	14.5	55	37	170
63	32	45	16	G3/8	40	M16x1.5	24	8	25	31	25	16	16.5	69	37	190
80	40	45	16	G3/8	50	M20x1.5	30	10	26	31	25	16	16.5	86	46	210
100	40	55	20	G1/2	60	M20x1.5	30	10	30	35	25	20	19	106	51	230

Dimensions for Cylinder Series NRK

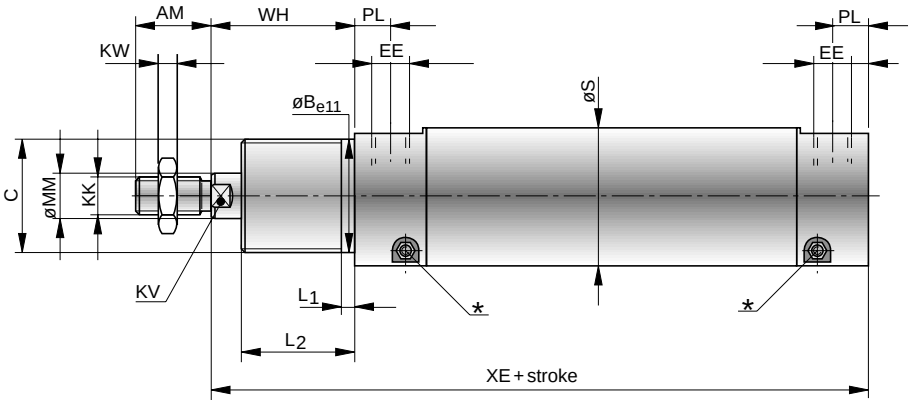

* adjustable end cushioning

Dimension Table (mm) for Cylinder Series NRK

Cyl.-Ø	AM	$øB_{e11}$	C	EE	KK	KV	KW	L_1	L_2	øMM	PL	øS	WH	XE +stroke
32	22	30	M30x1.5	G1/8	M10x1.25	16	5	4	15.5	12	15	36	28	1120
40	24	35	M35x1.5	G1/4	M12x1.25	18	6	4	20	16	14	45	30	135
50	32	40	M40x1.5	G1/4	M16x1.5	24	8	4	24	20	14,5	55	37	143
63	32	45	M45x1.5	G3/8	M16x1.5	24	8	4	24	20	16,5	69	37	158
80	40	45	M45x1.5	G3/8	M20x1.5	30	10	4	30.5	25	16,5	86	46	174
100	40	55	M55x1.5	G1/2	M20x1.5	30	10	4	35	25	19	106	51	189

Piston Rod Clevis to IS08139

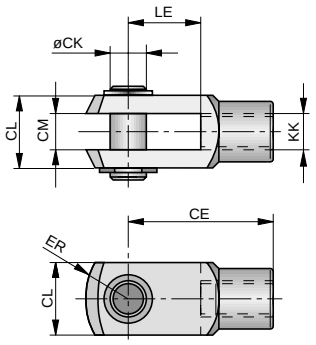

Order Instructions, Dimension Table (mm), Weight

Order Instructions Type	Order No.	to Cyl. ø	CE	CK	CL	CM	øER	KK	LE	Weight (kg)
GKS-M10x1.25	KC 5091	**32**	40	10	20	10	12	M10x1.25	20	0.080
GKS-M12x1.25	KC 5092	**40**	48	12	24	12	14	M12x1.25	24	0.125
GKS-M16x1.5	KC 5093	**50, 63**	64	16	32	16	19	M16x1.5	32	0.300
GKS-M20x1.5	KC 5094	**80,100**	80	20	40	20	25	M20x1.5	20	0.520

Material: X12 Cr Ni S 18 8 (1.4306)

Piston Rod Eye to ISO 8140

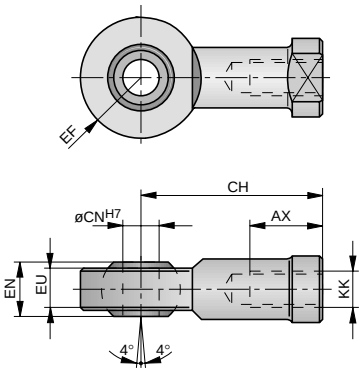

Order Instructions, Dimension Table (mm), Weight

Order Instructions Type	Order No.	to Cyl. ø	AX	CH	øCN	EF	EN	EU	KK	Weight (kg)
GAS-M10x1.25	KC 5095	**32**	20	43	10	13	14	10,5	M10x1.25	0.072
GAS-M12x1.25	KC 5096	**40**	22	50	12	15	16	12	M12x1.25	0.107
GAS-M16x1.5	KC 5097	**50, 63**	28	64	16	20	21	15	M16x1.5	0.210
GAS-M20x1.5	KC 5098	**80,100**	33	77	20	25	25	18	M20x1.5	0.380

Material: X12 Cr Ni S 18 8 (1.4306)

Grooved Nut

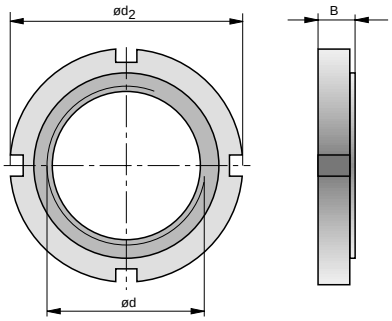

Order Instructions, Dimension Table (mm), Weight

Order Instructions Type	Order No.	to Cyl. ø	B	ød	ød$_2$	Weight (kg)
M30x1.5	**KC 5099**	**32**	7	M30x1.5	45	0.045
M35x1.5	**KC 5100**	**40**	8	M35x1.5	52	0.060
M40x1.5	**KC 5101**	**50**	9	M40x1.5	58	0.085
M45x1.5	**KC 5102**	**63, 80**	10	M45x1.5	65	0.125
M55x2.0	**KC 5103**	**100**	11	M55x2.0	75	0.160

Material: X12 Cr Ni S 18 8 (1.4306)

Order Instructions

Basic Cylinder (Universal Cylinder)				
Series	Symbol	Piston-Ø	Order Instructions Type	Order No.
Double acting with adjustable end cushioning for contactless position sensing	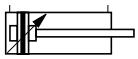	32	**NR 5032/...***	**PA 58500-....**
			NRK 5032/...	**PA 58510-....**
		40	**NR 5040/...**	**PA 59420-....**
			NRK 5040/...	**PA 59430-....**
		50	**NR 5050/....**	**PA 60500-....**
			NRK 5050/....	**PA 60510-....**
		63	**NR 5063/....**	**PA 61440-....**
			NRK 5063/....	**PA 61450-....**
		80	**NR 5080/....**	**PA 62340-....**
			NRK 5080/....	**PA 62350-....**
		100	**NR 5100/....**	**PA 63240-....**
			NRK 5100/....	**PA 63250-....**

Complete type designation and order no. with stroke length in mm (4-digits)

Standard stroke lengths: 0025, 0050, 0080, 0100, 0125, 0160, 0200, 0250, 0320, 0400, 0500 delivered preferably

* Proximity sensor mounting by band

Cylinder

ø 32-63 mm

with through piston rod

Version:
Double acting without cushioning for contactless position sensing

Series RDU ....

RDU 6...

Characteristics according to VDI 3292			Pressures quoted as gauge pressure			
Characteristics		Symbol	Unit	Description		
General Features						
Type				Round cylinder with through piston rod		
Series				RDU 6...		
System				Double acting without cushioning		
Mounting				See drawings		
Tube connection				Thread		
Ambient temperature range		ϑ_{min} ϑ_{max}	°C °C	-10 +70	Note: When using below freezing point (°C), please contact us for advice.	
Medium temperature range		ϑ_{max}	°C	+70		
Weight (mass)			kg	See table		
Installation				In any position		
Medium				Filtered and lubricated compressed air		
Lubrication				Oil mist lubrication compatible with Buna N		
Material	Cylinder barrel			Anodized aluminium		
	Front			Anodized aluminium		
	Piston rod			Stainless steel		
Pneumatic Characteristics						
Nominal pressure		p_n	bar	6		
Operating pressure range		p_{min} p_{max}	bar bar	1 10		
Piston diameter			mm	32	40	50	63
Port size				G 1/8	G1/4	G1/4	G 3/8
Piston rod diameter			mm	12	16	20	20
Stroke length				For max. stroke length see piston rod load diagram 2.05.002E		
Piston force and air consumption				See data sheet 2.05.001E		

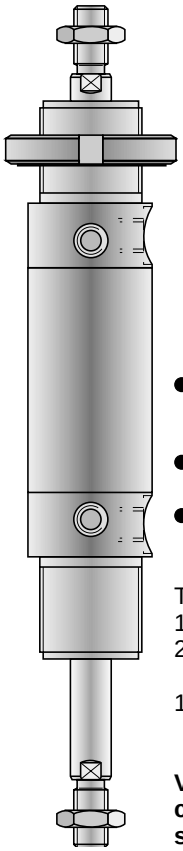

- Universal cylinder for mounting by a thread on the cylinder cover
- Pivot mounting on the cylinder cover
- Reed switch mounting by band

The delivery includes:
1 Cylinder
2 Hexagon nuts for piston rod thread
1 Grooved nut for cylinder mountings

Versions without contactless position sensing on request.

Weight (mass) kg

Type	Weight (kg) *	Weight for every additional 100 mm stroke length
RDU 6032/100	1,10	0,34
RDU 6040/100	1,48	0,56
RDU 6050/100	2,56	0,85
RDU 6063/100	3,26	0,95

* Weight for cylinder with 100 mm stroke

For product group list see 2.01.001E
For cylinder switch see 2.90.040E, 2.90.041E

Data Sheet No. 2.21.025E-1

A1P460E00DX00X

The right to introduce technical modifications is reserved

HOERBIGER ORIGA

Dimensions

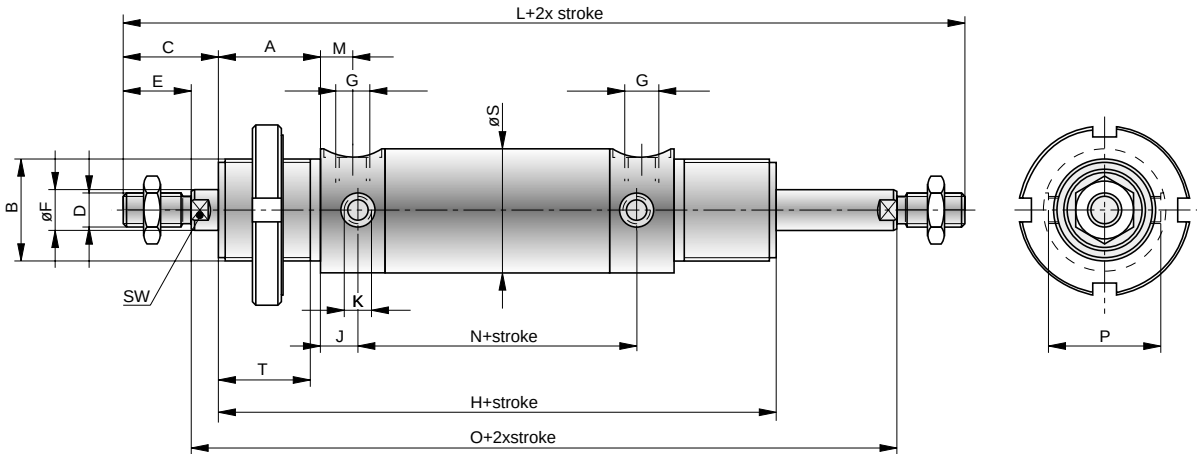

Dimension Table (mm)

Cyl.-Ø	A	B	C	D	E	ØF	G	H+ stroke	J	K	L+2x stroke	M	N+ stroke	O+2x stroke	P	ØS	T	SW
32	30	M30x1,5	28	M10	20	12	G1/8	143,5	11	M8x1	199,5	9,5	64,5	159,5	33	36	27	10
40	35	M38x1,5	34	M12	24	16	G1/4	161,5	12	M10x1	229,5	11	69,5	181,5	40	45	31	14
50	38	M45x1,5	44	M16	32	20	G1/4	175	13	M12x1,5	263	11	77	199	50	55	34	17
63	38	M45x1,5	45	M16	32	20	G3/8	182	13,5	M14x1,5	272	12,5	81	208	62	69*	34	17

* Front cylinder cover Ø 70 mm

Mounting options

Foot mounting
(2 mounting brackets)

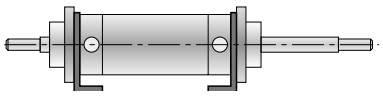

Material: steel, passivated

Foot mounting
Flange mounting

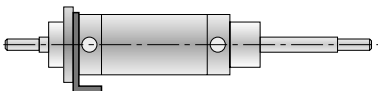

steel, passivated

Trunnion
Mounting

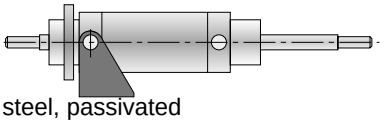

steel, passivated

Order Instructions

Basic Cylinder (without mountings)

Series	Symbol	Piston-Ø	Order Instructions Type	Order No.
Double acting without adjustable end cushioning for contactless position sensing	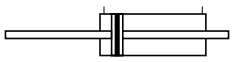	32	**RDU 6032/...**	**PA 58270-....**
		40	**RDU 6040/...**	**PA 59200-....**
		50	**RDU 6050/...**	**PA 60270-....**
		63	**RDU 6063/...**	**PA 61200-....**

Complete type designation and order no. with stroke length (in mm) (in mm 4-digit)

Standard stroke lengths: 0025, 0050, 0080, 0100, 0125, 0160, 0200, 0250, 0320, 0400, 0500 delivered preferably

Mountings - Accessories

Description	Type	Order No. Ø32	Ø40	Ø50	Ø63
Foot mounting (1 mounting bracket)	**RA 1-..**	**KK 29.302**	**KK 30.302**	**KK 31.302**	**KK 32.302**
Foot mounting (standard version)	**RA 2-..***	**PD 25712**	**PD 25713**	**PD 25714**	**PD 25715**
Flange mounting (1 mounting bracket)	**RC- ..**	**KK 29.302**	**KK 30.302**	**KK 31.302**	**KK 32.302**
Front trunnion mounting	**RE-..**	**PD 40394**	**PD 40395**	**PD 40396**	**PD 40397**

Complete type designation with piston-Ø

Ordering example: RA 1-32 KK 29.302

* consists of 2 mounting brackets and 1 hexagon nut

Cylinder

ø 32-100 mm

Characteristics according to VDI 3294 Pressures quoted as gauge pressure

Characteristics		Symbol	Unit	Description					
General Features									
Type				Piston rod cylinder					
Series				NZK 6, NZK 7, NZK 8					
Series NZK 6...				Double acting without cushioning for contactless position sensing					
Series NZK 7..., NZK 8...				Single acting without cushioning for contactless position sensing					
Mounting				See drawing					
Tube connection				Thread					
Ambient temperature range		ϑ_{min} ϑ_{max}	°C °C	-20 +80	Note: When using below freezing				
Mediums-temperature range		ϑ_{max}	°C	+8	point (°C) it is necessary to consult us				
Weight (mass)			kg	See table					
Installation				In any position					
Medium				Filtered and lubricated or filtered and unlubricated compressed air					
Lubrication				Oil mist lubrication compatible with polyurethane					
Material	Cylinder tube			Aluminium					
	Front/Rear covers			Aluminium					
	Piston rod			Stainless steel					
Pneumatic Characteristics									
Nominal pressure		p_n	bar	6					
Operating pressure		p_{min} p_{max}	bar bar	0,5 (Single acting version : 1,0) 10					
Piston diameter			mm	32	40	50	63	80	100
Port size				G1/8	G1/8	G1/8	G1/8	G1/8	G1/4
Piston rod diameter			mm	12	16	20	20	25	25
Piston rod thread			[1])	M6 M10x1,25	M6 M12x1,25	M8 M16x1,5	M8 M16x1,5	M10 M20x1,5	M12 M20x1,5
Stroke length			mm	Double acting version: see order instructions Single acting versin: 5, 10, 15, 20, 25					
Piston force and air consumption				see Data-Sheet 2.05.001					
Cushioning				Elastomer cushioning at both ends					
Spring return force		max.	N	see diagramm					

[1]) Piston rod thread on series NZK..../....-AG

Weight (mass) kg

Mounting	Cylinder -Ø 32		40		50		63		80		100	
	*1	*2	1	2	1	2	1	2	1	2	1	2
Basic Cyl.	0,35		0,48		0,68		1,17		1,68		2,61	
A	0,55		0,73		0,88		1,57		2,48		3,51	
B	0,45		0,58		0,83		1,37		2,08		3,21	
BA	0,55	0,042	0,68	0,057	0,78	0,079	1,57	0,096	2,48	0,130	3,61	0,175
BAS	0,50		0,68		0,78		1,47		2,18		3,51	
C	0,50		0,58		0,73		1,52		2,18		3,51	
D	0,50		0,58		0,73		1,52		2,18		3,51	

*1 = Cylinder weight (10 mm stroke)
*2 = Weight per further 10 mm stroke length

For cylinder switches see 2.90.040E, 2.90.041E
For product group list see 2.01.001

Versions:
- **For contactless position sensing as standard**
- **Single acting without adjustable end cushioning – normally retracted**
- **Single acting without adjustable end cushioning – normally extended**
- **Double acting without adjustable end cushioning**
- **Option of internal or external mounting on piston rod**

Series NZK ....

NZK 6...

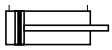

NZK 7...

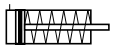

NZK 8...

Special versions:
- **High temperature version (+150°)**

The cylinder profile has grooves in which, depending on stroke length, one more magnetic proximity sensors can be mounted for sensing the end positions or intermediate positions of the magnetic piston.

Proximity sensors are not included - please order these separately.

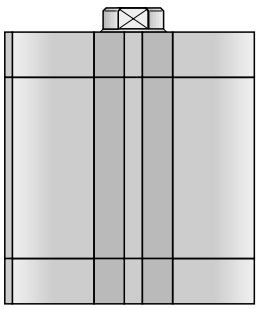

HOERBIGER ORIGA

Data Sheet No. 2.28.001E-1

A1P526E00EX00X

The right to introduce technical modifications is reserved

Theoretical Spring Return Forces in relation to Stroke Length
Series NZK 7000, NZK 8000

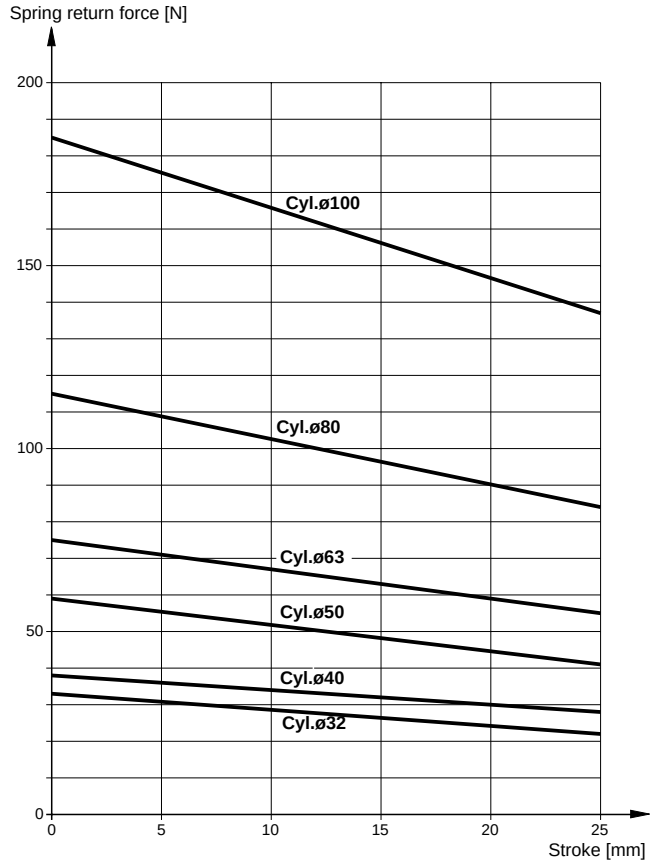

Dimensions for Basic Cylinder
Version: Piston Rod with Internal Thread (Series NZK..../...)

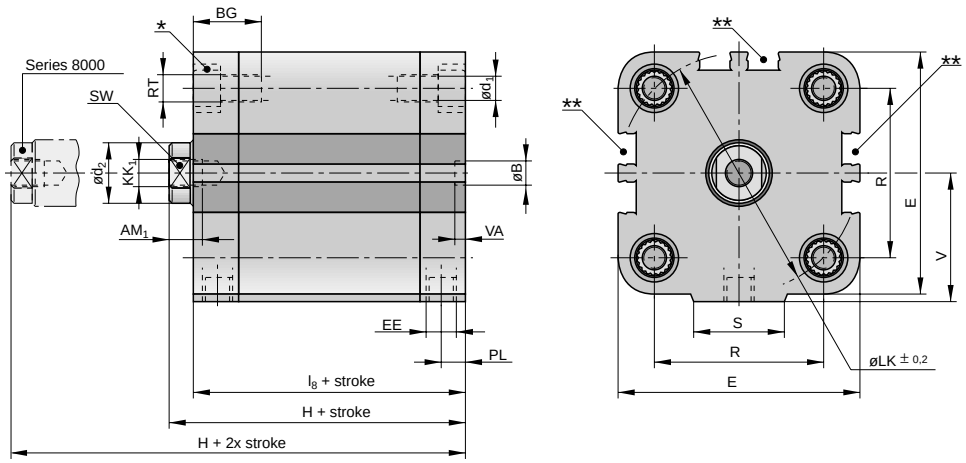

* Mounting screws to DIN 912 can be flush-countersunk
** Cylinder diameters 32, 40, 50 mm: only 1 groove in the middle

Dimension Table (mm) for Basic Cylinder

Cyl. ø	AM_1	øB H9	BG	$ød_1$	$ød_2$	E	EE	H (* +stroke	KK_1	l_8 +stroke	øLK	PL	R	RT	S	SW	V	VA
32	12	6	21	5,5	12	50	G1/8	50,5	M6	44,5	46	8	32,5	M6	21	10	26,5	4
40	12	6	21	5,5	16	57	G1/8	52	M6	45,5	54	8	38	M6	22	13	30	4
50	12	6	22,5	6,5	20	67,5	G1/8	53	M8	45,5	66	8	46,5	M8	25	17	35,75	4
63	12	8	22,5	6,5	20	81	G1/8	57,5	M8	50	80	8	56,5	M8	30	17	43,5	4
80	16	8	27,5	8,5	25	98	G1/8	64	M10	56	102	8,5	72	M10	40	19	53	4
100	20	8	32,5	8,5	25	119	G1/4	76,5	M12	66,5	126	10,5	89	M10	50	22	62,5	4

(* Series NZK 8000: H + 2x stroke

Dimensions for Basic Cylinder
Version: Piston Rod wtih External Thread (Series NZK..../...-AG)

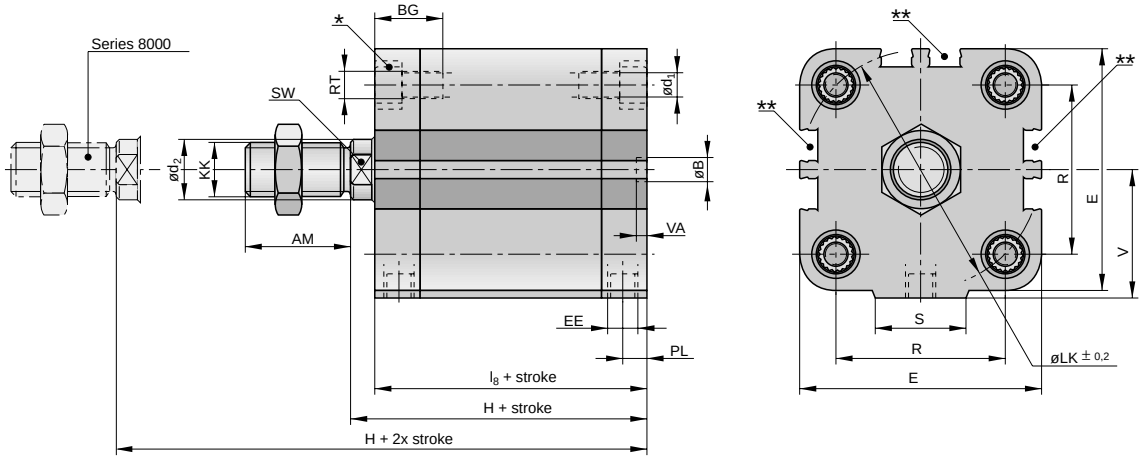

* Mounting screws to DIN 912 can be flush-countersunk
** Cylinder diameters 32, 40, 50 mm: only 1 groove in the middle

Dimension Table (mm) for Basic Cylinder

Cyl. ø	AM	øB H9	BG	$ød_1$	$ød_2$	E	EE	H (* +stroke	KK	l_8 +stroke	øLK	PL	R	RT	S	SW	V	VA
32	20	6	21	5,5	12	50	G1/8	50,5	M10x1,25	44,5	46	8	32,5	M6	21	10	26,5	4
40	24	6	21	5,5	16	57	G1/8	52	M12x1,25	45,5	54	8	38	M6	22	13	30	4
50	32	6	22,5	6,5	20	67,5	G1/8	53	M16x1,5	45,5	66	8	46,5	M8	25	17	35,75	4
63	32	8	22,5	6,5	20	81	G1/8	57,5	M16x1,5	50	80	8	56,5	M8	30	17	43,5	4
80	40	8	27,5	8,5	25	98	G1/8	64	M20x1,5	56	102	8,5	72	M10	40	19	53	4
100	40	8	32,5	8,5	25	119	G1/4	76,5	M20x1,5	66,5	126	10,5	89	M10	50	22	62,5	4

(* Series NZK 8000: H + 2x stroke

Dimensions for Mounting A

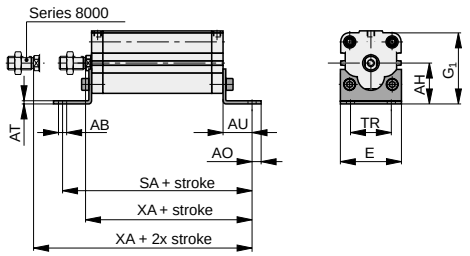

Material: steel, passivated

Dimension Table (mm) for Mounting A

Cyl.-Ø	AB Ø	AH	AO	AT	AU	E	G_1	TR	SA+ stroke	XA+ stroke (*
32	7	32	8	3	24	47	58,5	32	92,5	74,5
40	9	36	10	3	28	53	66	36	101,5	80
50	9	45	10	3	32	65	81	45	109,5	85
63	9	50	10	3	32	75	93,5	50	114	89,5
80	12	63	14	4	41	95	116	63	138	105
100	14	71	15	4	41	115	133,5	75	148,5	117,5

(* Series NZK 8000: XA + 2x stroke

Dimensions for Mounting B

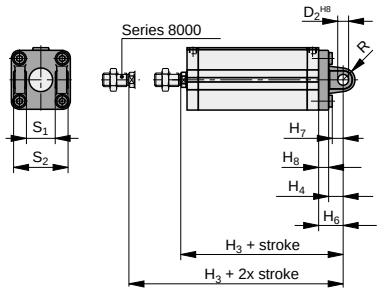

Material: cast aluminium

Dimension Table (mm) for Mounting B

Cyl.-Ø	ØD H8	H_3+ stroke (*	H_4	H_6	H_7	H_8	R	S_1	S_2
32	10	72,5	12	22	11	10	9	26	45
40	12	77	15	25	14	10	11	28	52
50	12	80	16	27	15	11	12	32	60
63	16	89,5	21	32	20	11	15	40	70
80	16	100	22	36	21	14	16	50	90
100	20	117,5	25	41	24	16	20	60	110

(* Series NZK 8000: H_3 + 2x stroke

Dimensions for Mounting BA

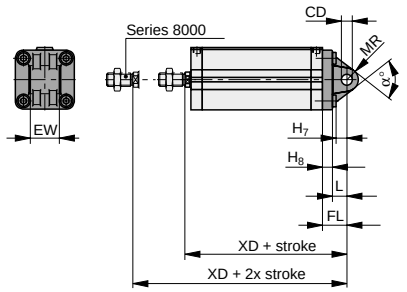

Material: cast aluminium

Dimension Table (mm) for Mounting BA

Cyl.-Ø	øCD H8	EW	FL	H_7	H_8	L	MR	XD (* +stroke	a°
32	10	26	22	11	10	12	10,5	72,5	60
40	12	28	25	14	10	15	13	77	60
50	12	32	27	15	11	16	13	80	70
63	16	40	32	20	11	21	17	89,5	60
80	16	50	36	20	15	21	17	100	70
100	20	60	41	24	16	25	21	117,5	70

(* Series NZK 8000: XD + 2x stroke

Dimensions for Mounting BAS

Rear trunnion mounting with spherical bearing

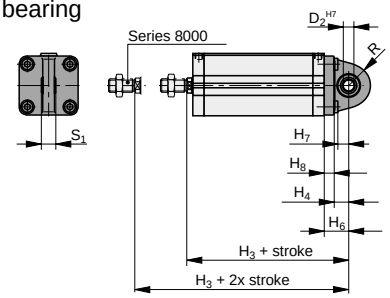

Material: cast aluminium

Dimension Table (mm) for Mounting BAS

Cyl.-Ø	ØD_2 H7	H_3+ stroke (*	H_4	H_6	H_7	H_8	R	S_1
32	10	72,5	12	22	11	10	18	14
40	12	77	15	25	14	10	21	16
50	12	80	16	27	15	11	23	16
63	16	89,5	21	32	20	11	27	21
80	16	100	21	36	20	15	29	21
100	20	117,5	25	41	24	16	34	25

(* Series NZK 8000: H_3 + 2x stroke

Dimensions for Mounting C

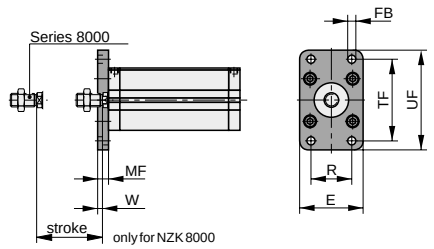

Material: cast aluminium

Dimension Table (mm) for Mounting C

Cyl.-Ø	øFB	E	MF	R	TF	UF	W
32	7	50	10	32	64	79	4
40	9	56	10	36	72	90	3,5
50	9	70	12	45	90	110	4,5
63	9	77	12	50	100	120	4,5
80	12	100	16	63	126	153	8
100	14	120	16	75	150	178	6

Dimensions for Mounting D

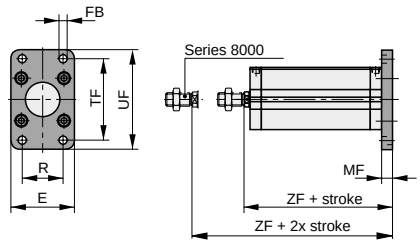

Material: cast aluminium

Dimension Table (mm) for Mounting D

Cyl.-Ø	øFB	E	MF	R	TF	UF	ZF +stroke (1
32	7	50	10	32	64	79	60,5
40	9	56	10	36	72	90	62
50	9	70	12	45	90	110	65
63	9	77	12	50	100	120	69,5
80	12	100	16	63	126	153	80
100	14	120	16	75	150	178	92,5

([1] bei NZK 8000 : ZF+2 x stroke

Adapterplate for Mounting S9-Valves G1/8 and G1/4

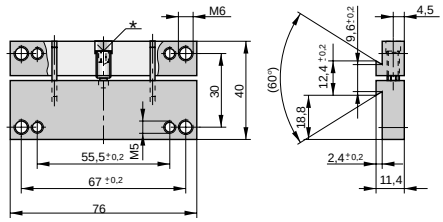

Order No.:PD 40372 * Allan screw SW 2,5

Pivot (series GLN) for Mounting B to VDMA 24562

for 90° angle

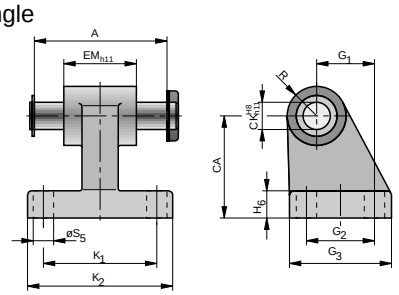

Material: cast aluminium

Order Instructions, Dimension Table (mm), Weight

Order Instructions Type	Order No.	Cyl.-Ø	A	CA	CK^{H8}_{h11}	EM_{h11}	G_1	G_2	G_3	H_6	K_1	K_2	R_1	$øS_5$	Weight (kg)
GLN-032	**PD 40844**	32	46	32	10	26	21	18	31	8	38	50	10	6,6	0,092
GLN-040	**PD 40845**	40	53	36	12	28	24	22	35	10	41	53	11	6,6	0,131
GLN-050	**PD 40846**	50	61	45	12	32	33	30	45	12	50	64	13	9	0,193
GLN-063	**PD 40847**	63	71	50	16	40	37	35	50	12	52	66	15	9	0,305
GLN-080	**PD 40848**	80	91	60	16	50	47	40	60	14	66	84	15	11	0,460
GLN-100	**PD 40849**	100	111	70	20	60	55	50	70	15	76	94	19	11	0,840

Compensating Coupling for Piston Rod

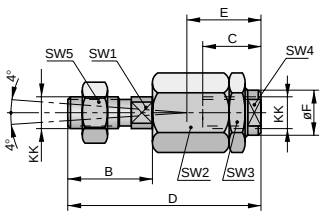

Material:steel

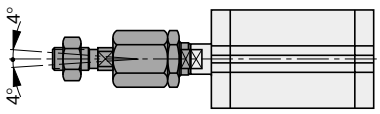

Angle compensation

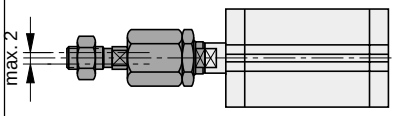

Radial compensation of centre axis

Order Instructions, Dimension Table (mm), Weight

Order Instructions Type	Order No.	Cyl.Ø	B	C	D	E	ØF	KK	SW1	SW2	SW3	SW4	SW5	Weight (kg)
AK-M 10x1,25	**KY 1129**	32	20	23	70	31	21,5	M10x1,25	12	30	30	19	17	0,218
AK -M12x1,25	**KY 1131**	40	23	23	67	31	21,5	M12x1,25	12	30	30	19	19	0,207
AK -M16x1,5	**KY 1133**	50,63	40	32	112	45	33,5	M16x1,5	19	41	41	30	30	0,637
AK -M20x1,5	**KY 1134**	80,100	40	42	122	56	33,5	M20x1,5	19	41	41	30	30	0,711

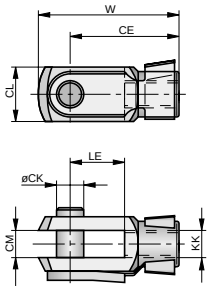

Material: Galvanized steel

Order Instructions, Dimension Table (mm), Weight

Order Instructions Type	Order No.	Cyl.Ø	ØCK	CE	CL	CM	KK	LE	W	Weight (kg)
GK-M10 x 1,25	**KY 6135**	32	10	40	20	10	M10x1,25	20	52	0,08
GK-M12 x 1,25	**KY 6136**	40	12	48	24	12	M12x1,25	24	62	0,125
GK-M16 x 1,5	**KY 6139**	50,63	16	64	32	16	M16x1,5	32	83	0,30
GK-M20 x 1,5	**KY 6141**	80,100	20	80	40	20	M20x1,5	40	105	0,52

Piston Rod Eye to ISO 8139 (CETOP RP103 P)

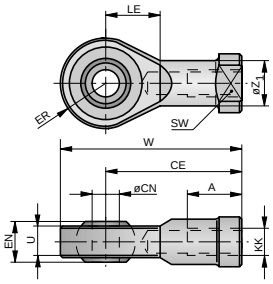

Material: Galvanized steel

Order Instructions, Dimension Table (mm), Weight

Order Instructions Type	Order No.	Cyl.-Ø	A	CE	øCN	EN	ER	KK	LE	SW	U	W	$øZ_1$	Weight (kg)
GA-M10 x 1,25	**KY 6147**	32	20	43	10	14	14	M10x1,25	15	17	10,5	57	15	0,072
GA-M12 x 1,25	**KY 6148**	40	22	50	12	16	16	M12x1,25	17	19	12	66	17,5	0,107
GA-M16 x 1,5	**KY 6150**	50,63	28	64	16	21	21	M16x1,5	22	22	15	85	22	0,21
GA-M20 x 1,5	**KY 6151**	80,100	33	77	20	25	25	M20x1,5	26	32	18	102	27,5	0,38

Order Instructions for Basic Cylinder (Without Mounting)

Series	Symbol	Piston-Ø	Order Instructions Type	Order Instructions Order-No.
Double acting without adjustable end cushioning, for contactless position sensing	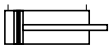	32	**NZK 6032/...** **NZK 6032/...-AG**	**PA 58390-....** **PA 58470-....**
		40	**NZK 6040/...** **NZK 6040/...-AG**	**PA 59310-....** **PA 59390-....**
		50	**NZK 6050/...** **NZK 6050/...-AG**	**PA 60390-....** **PA 60470-....**
		63	**NZK 6063/...** **NZK 6063/...-AG**	**PA 61330-....** **PA 61410-....**
		80	**NZK 6080/...** **NZK 6080/...-AG**	**PA 62230-....** **PA 62310-....**
		100	**NZK 6100/...** **NZK 6100/...-AG**	**PA 63130-....** **PA 63210-....**
Single acting, normally retracted, without adjustable end cushioning for contactless position sensing	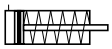	32	**NZK 7032/...** **NZK 7032/...-AG**	**PA 58400-....** **PA 58480-....**
		40	**NZK 7040/...** **NZK 7040/...-AG**	**PA 59320-....** **PA 59400-....**
		50	**NZK 7050/...** **NZK 7050/...-AG**	**PA 60400-....** **PA 60480-....**
		63	**NZK 7063/...** **NZK 7063/...-AG**	**PA 61340-....** **PA 61420-....**
		80	**NZK 7080/...** **NZK 7080/...-AG**	**PA 62240-....** **PA 62320-....**
		100	**NZK 7100/...** **NZK 7100/...-AG**	**PA 63140-....** **PA 63220-....**
Single acting, normally extended, without adjustable end cushioning for contactless position sensing		32	**NZK 8032/...** **NZK 8032/...-AG**	**PA 58460-....** **PA 58490-....**
		40	**NZK 8040/...** **NZK 8040/...-AG**	**PA 59380-....** **PA 59410-....**
		50	**NZK 8050/...** **NZK 8050/...-AG**	**PA 60460-....** **PA 60490-....**
		63	**NZK 8063/...** **NZK 8063/...-AG**	**PA 61400-....** **PA 61430-....**
		80	**NZK 8080/...** **NZK 8080/...-AG**	**PA 62300-....** **PA 62330-....**
		100	**NZK 8100/...** **NZK 8100/...-AG**	**PA 63200-....** **PA 63230-....**

Complete type designation and order no. with stroke length in mm (4- digits)

Standard stroke length:
Double acting Version: – 0005, 0010, 0025, 0050, 0080, 0100, 0125, 0160, 0200, 0250, 0320, 0400, 0500
Single acting Version: – 0005, 0010, 0015, 0020, 0025

Order Instructions for Cylinder Mountings

Description	Order No. Ø32	Ø40	Ø50	Ø63	Ø80	Ø100
Foot mounting A-..	**PD 27917**	**PD 27918**	**PD 28072**	**PD 28073**	**PD 28074**	**PD 28075**
Rear trunnion mounting B-..	**PD 22704**	**PD 22705**	**PD 22706**	**PD 22707**	**PD 22708**	**PD 22709**
Rear trunnion mounting BA-..	**PD 23412**	**PD 23413**	**PD 23414**	**PD 23415**	**PD 23416**	**PD 23417**
Rear trunnion mounting BAS-..*	**PD 23843**	**PD 23844**	**PD 23845**	**PD 23846**	**PD 23847**	**PD 23848**
Front flange mounting C-..	**PD 23403**	**PD 23404**	**PD 23405**	**PD 23406**	**PD 23407**	**PD 23408**
Rear flange mounting D-..	**PD 23403**	**PD 23404**	**PD 23405**	**PD 23406**	**PD 23407**	**PD 23408**
Security bolt for mountings B,BA,BAS	**KY 6153**	**KY 6154**	**KY 6157**	**KY 6156**	**KY 6158**	**KY 6159**

Delivery information: on delivery all cylinder mountings, except the trunnion mounting are not assembled

Ordering Example: Basic Cylinder: NZK 6032/100 PA 58390-0100 Foot Mounting: A-32 PD 27917

*with spherical bearing

Cylinder

ø 32-100 mm

to ISO 6431
VDMA 24562
and CETOP RP43P

Versions:
Double acting with cushioning
for contactless position sensing

Series AZ ....

AZ5...

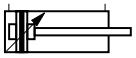

Characteristics according to VDI 3294 Pressures quoted as gauge pressure

Characteristics		Symbol	Unit	Description					
General Features									
Type				Piston rod cylinder					
Series				AZ5					
System				Double acting with cushioning for contactless position sensing					
Mounting				See drawing					
Tube connection				Thread					
Ambient temperature range		ϑ_{min} ϑ_{max}	°C °C	-20 +80	Note: When using below freezing point (°C) it is necessary to consult us				
Medium temperature range		ϑ_{max}	°C	+80					
Weight (mass)			kg	See table					
Installation				In any position					
Medium				Filtered and lubricated or filtered and unlubricated compressed air					
Lubrication				Oil mist lubrication compatible with Buna N					
Material	Cylinder tube			Aluminium					
	Front/Rear covers			Aluminium					
	Piston rod			Stainless steel					
Pneumatic Characteristics									
Nominal pressure		p_n	bar	6					
Operating pressure range		p_{min} p_{max}	bar bar	0,5 10					
Piston diameter			mm	32	40	50	63	80	100
Port size				G1/8	G1/4	G1/4	G3/8	G3/8	G1/2
Piston rod diameter			mm	12	16	20	20	25	25
Piston rod thread				M10 x1,25	M12 x1,25	M16 x1,5	M16 x1,5	M20 x1,5	M20 x1,5
Stroke length				For max. stroke length see load diagram 2.05.002E					
Piston force and air consumption				See data sheet no. 2.05.001E					
Cushioning				at both end, infinitely variable					
Cushioned stroke			Cyl.-Ø	32	40	50	63	80	100
			mm	21	25	28	30	30	37

Weight (mass) kg

Mounting	Cylinder-Ø 32		40		50		63		80		100	
	*1	*2	1	2	1	2	1	2	1	2	1	2
Basic cylinder	0,65	0,20	1,10	0,312	1,60	0,422	2,15	0,532	3,45	0,78	4,60	1,03
A	0,85		1,35		1,80		2,55		4,25		5,50	
B	0,75		1,20		1,65		2,35		3,85		5,20	
BA	0,85		1,30		1,70		2,55		4,25		5,60	
BAS	0,80		1,30		1,70		2,45				5,50	
C	0,80		1,20		1,65		2,40		3,95		5,50	
D	0,80		1,20		1,65		2,40		3,95		5.50	
EN	1,05		1,80		2,40		4,50		5,20		7,10	

*1 = Cylinder weight (100 mm stroke)
*2 = Weight per further 100 mm stroke length

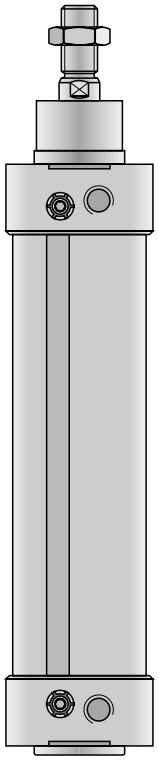

Special Versions:
- Version H for hydraulic operation (for p_{max} see Characteristics Table)
- Version for high temperature range (+150°)
- Tie rod version
- With adaptor plate for value mounting

One or more magnetic proximity sensors (depending on stroke length) can be mounted in the grooves in the cylinder profile, for sensing the end positions or intermediate positions of the piston.

Comprises:
1 Cylinder
1 Hexagon nut for piston rod thread

Magnetic proximity sensors are not included - please order these separately

For cylinder switch see 2.90.040E, 2.90.041E
For product group list see 2.01.001E

A1P507E00IX00X

The right to introduce technical modifications is reserved

HOERBIGER ORIGA

Dimensions for Basic Cylinder

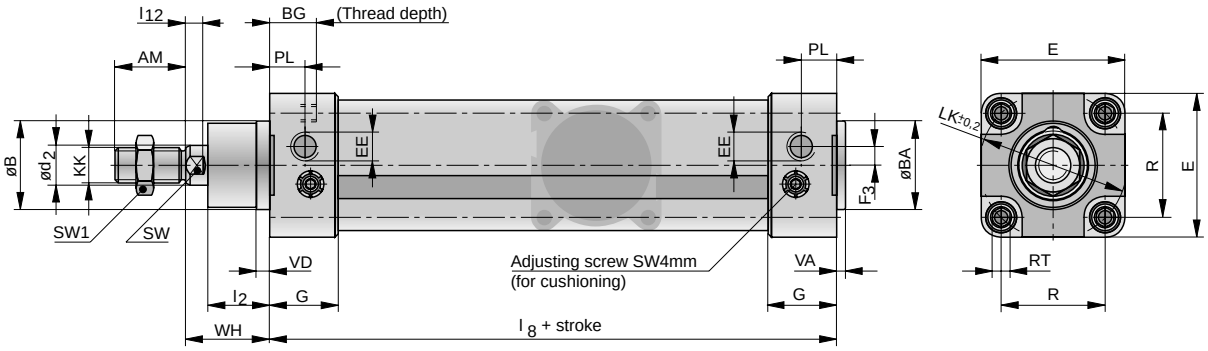

Tie rod version on request

Dimension Table (mm) for Basic Cylinder

Cyl. Ø	AM	øB d11	øBA d11	BG	ød$_2$	E	EE	F$_3$	G	KK	l$_2$	l$_8$ +stroke	l$_{12}$	øLK	PL	R	RT	SW	SW1	VA	VD	WH
32	20	30	30	16	12	47	G1/8	4,5	30,5	M10 x1,25	20	94	6	46	9,8	32,5	M6	10	17	4	5	26
40	24	35	35	16	16	55	G1/4	5,3	34	M12 x1,25	20,5	105	6,5	54	14,5	38	M6	13	19	4	4,5	30
50	32	40	40	16	20	65	G1/4	8,5	31	M16 x1,5	28	106	8	66	16	46,5	M8	17	24	4	6	37
63	32	45	45	16	20	78	G3/8	8	33	M16 x1,5	26	121	8	80	16	56,5	M8	17	24	4	6	37
80	40	45	45	16	25	95	G3/8	9	35,5	M20 x1,5	32,5	128	10	102	20,5	72	M10	22	30	4	6	46
100	40	55	55	16	25	115	G1/2	13	37	M20 x1,5	37,5	138	10	126	19	89	M10	22	30	4	6	51

Dimensions for Mounting A

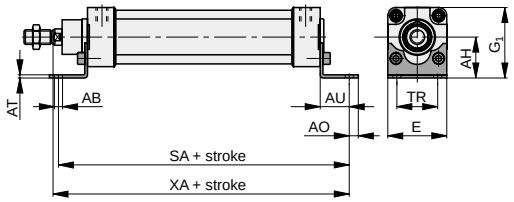

Material: steel, passivated

Dimension Table (mm) for Mounting A

Cyl.-Ø	AB	AH	AO	AT	AU	E	G1	TR	SA+ stroke	XA+ stroke
32	7	32	8	3	24	47	55,5	32	142	144
40	9	36	10	3	28	53	62,5	36	161	163
50	9	45	10	3	32	65	77,5	45	170	175
63	9	50	10	3	32	75	87,5	50	185	190
80	12	63	14	4	41	95	110,5	63	210	215
100	14	71	15	4	41	115	128,5	75	220	230

Dimensions for Mounting B

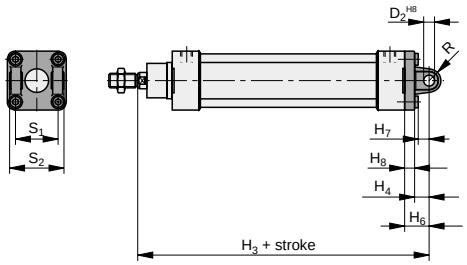

Material: cast aluminium

Dimension Table (mm) for Mounting B

Cyl.-Ø	ØD H8	H$_3$+ stroke	H$_4$	H$_6$	H$_7$	H$_8$	R	S$_1$	S$_2$
32	10	142	12	22	11	10	9	26	45
40	12	160	15	25	14	10	11	28	52
50	12	170	16	27	15	11	12	32	60
63	16	190	21	32	20	11	15	40	70
80	16	210	22	36	21	14	16	50	90
100	20	230	25	41	24	16	20	60	110

Dimensions for Mounting BA

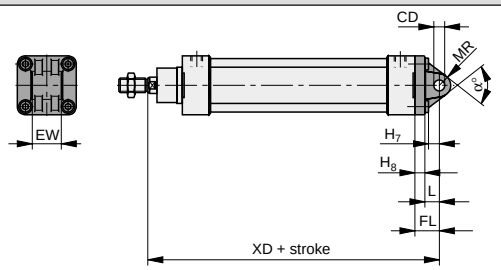

Material: cast aluminium

Dimension Table (mm) for Mounting BA

Cyl.-Ø	øCD H8	EW	FL	H_7	H_8	L	MR	XD +stroke	α°
32	10	26	22	11	10	12	10,5	142	60
40	12	28	25	14	10	15	13	160	60
50	12	32	27	15	11	16	13	170	70
63	16	40	32	20	11	21	17	190	60
80	16	50	36	20	15	21	17	210	70
100	20	60	41	24	16	25	21	230	70

Dimensions for Mounting BAS

Rear trunnion mounting with spherical bearing

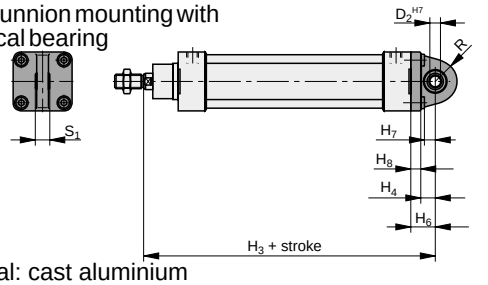

Material: cast aluminium

Dimension Table (mm) for Mounting BAS

Cyl.-Ø	$ØD_2$ H7	H_3+ stroke	H_4	H_6	H_7	H_8	R	S_1
32	10	142	12	22	11	10	18	14
40	12	160	15	25	14	10	21	16
50	12	170	16	27	15	11	23	16
63	16	190	21	32	20	11	27	21
80	16	210	21	36	20	15	29	21
100	20	230	25	41	24	16	34	25

Dimensions for Mounting C

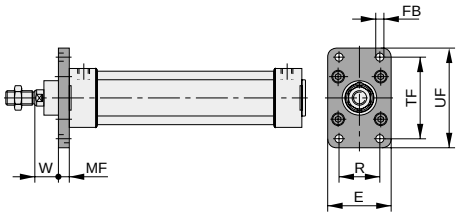

Material: cast aluminium

Dimension Table (mm) for Mounting C

Cyl.-Ø	øFB	E	MF	R	TF	UF	W
32	7	50	10	32	64	79	16
40	9	56	10	36	72	90	20
50	9	70	12	45	90	110	25
63	9	77	12	50	100	120	25
80	12	100	16	63	126	153	30
100	14	120	160	75	150	178	35

Dimensions for Mounting D

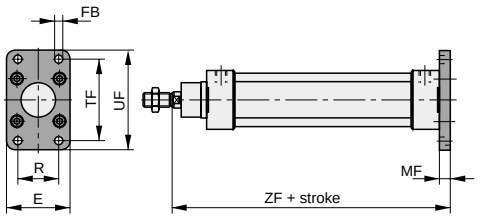

Material: cast aluminium

Dimension Table (mm) for Mounting D

Cyl.-Ø	øFB	E	MF	R	TF	UF	ZF +stroke
32	7	50	10	32	64	79	130
40	9	56	10	36	72	90	145
50	9	70	12	45	90	110	155
63	9	77	12	50	100	120	170
80	12	100	16	63	126	153	190
100	14	120	16	75	150	178	205

Dimensions for Mounting EN (ISO 6431) only for Series AZ (with profile cylinder barrel)

Flange dimensions to ISO 6431

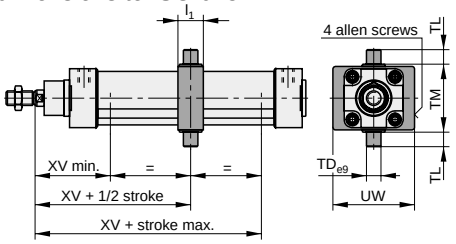

Material: anodised aluminium

Dimension Table (mm) for Mounting EN

Cyl.-Ø	l_1	$øTD_{e9}$	TL	TM	UW	XV min	XV+ 1/2 stroke	XV+ stroke max
32	25	12	12	50	65	67	73	79
40	28	16	16	63	75	72	83	94
50	28	16	16	75	85	81	90	99
63	36	20	20	90	100	85	98	111
80	36	20	20	110	120	99	110	121
100	48	25	25	132	135	107	120	133

With the EN mounting, the position of the mounting groove for the proximity sensors is offset 90° to the tube connections.

After loosening the locking screws, the trunnion mounting is infinitely variable between XV_{min} and XV_{max}.

Instructions for mounting EN:
In order to avoid faulty operation of the reed switches, a min. distance of 10 to 20 mm must be kept between switch and EN-mounting.

Dimensions for Mounting EN (ISO 6431) only series AZZ (tie rod version)

Flange dimensions to ISO 6431

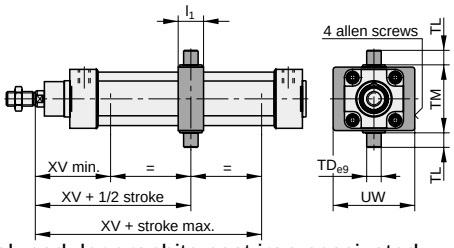

Material: nodular graphite cast iron passivated

Dimension Table (mm) for Mounting EN

Cyl.-Ø	l_1	øTD_{e9}	TL	TM	UW	XV min	XV+ 1/2 stroke	XV+ stroke max
32	22	12	12	50	65	67	73	79
40	28	16	16	63	75	72	83	94
50	28	16	16	75	85	81	90	99
63	35	20	20	90	100	85	98	111
80	35	20	20	110	120	99	110	121
100	40	25	25	132	135	107	120	133

After loosening the locking screws, the trunnion mounting is infinitely variable between XV_{min} and XV_{max}.

Adaptor plate for Mounting of S9 Valves G1/8 and G1/4

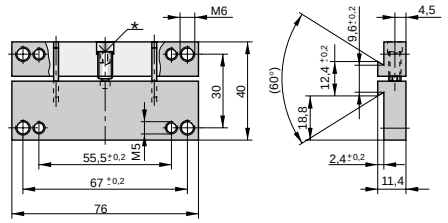

Order No.: PD 40372 * Socket head screw SW 2.5

Pivot for Mounting EN

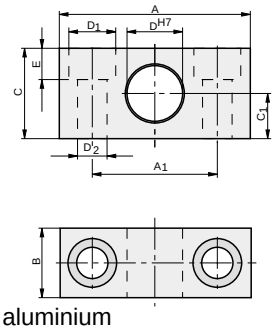

Material: cast aluminium

Order Instructions, Dimension Table (mm), Weight

Order Instructions Type	Order No.	to Cyl.Ø	A	A_1	B	C	C_1	ØD^{H7}	ØD_1	ØD_2	E	Weight (kg)
EL-032	**PD 23381**	32	55	36	20	26	13	12	13,5	8,4	9	0,06
EL-040/050	**PD 23382**	40,50	55	36	20	26	13	16	13,5	8,4	9	0,06
EL-063/080	**PD 23383**	63,80	65	42	25	30	15	20	16,5	10,5	11	0,10
EL-100	**PD 23384**	100	75	50	28	40	20	25	19	13	13	0,175

Pivot for Mounting B to VDMA 24562

For 90° angle

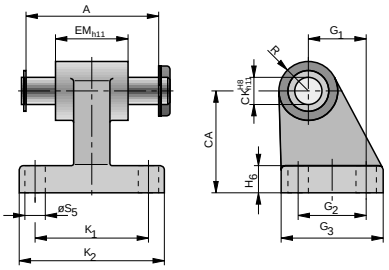

Material: cast aluminium

Order Instructions, Dimension Table (mm), Weight

Order Instructions Type	Order No.	Cyl.-Ø	A	CA	CK^{H8}_{h11}	EM_{h11}	G_1	G_2	G_3	H_6	K_1	K_2	R_1	$øS_5$	Weight (kg)
GLN-032	**PD 40844**	32	46	32	10	26	21	18	31	8	38	50	10	6,6	0,092
GLN-040	**PD 40845**	40	53	36	12	28	24	22	35	10	41	53	11	6,6	0,131
GLN-050	**PD 40846**	50	61	45	12	32	33	30	45	12	50	64	13	9	0,193
GLN-063	**PD 40847**	63	71	50	16	40	37	35	50	12	52	66	15	9	0,305
GLN-080	**PD 40848**	80	91	60	16	50	47	40	60	14	66	84	15	11	0,460
GLN-100	**PD 40849**	100	111	70	20	60	55	50	70	15	76	94	19	11	0,840

Pivot for Mounting B

For 90° angle

To Be Phased Out

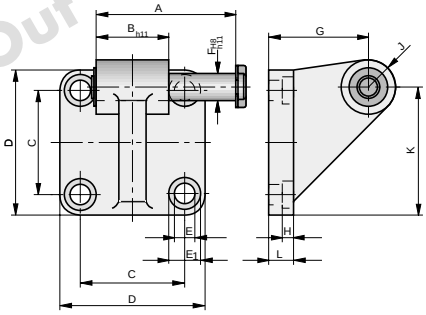

Material: cast iron, passivated

Order Instructions, Dimension Table (mm), Weight

Order Instructions Type	Order No.	Cyl.-Ø	A	B_{h11}	C	D	ØE	$ØE_1$	$ØF^{H8}_{h11}$	G	H	J	K	L	Weight (kg)
GL-032	**PD 25621**	32	46	26	32,5	46	7	12	10	32	5	10	39	10	0,21
GL-040	**PD 25622**	40	53	28	38	52	7	12	12	36	5	12	43,5	10	0,315
GL-050	**PD 25623**	50	61	32	46,5	64	9	14	12	45	5	12	56,5	11	0,49
GL-063	**PD 25624**	63	71	40	56,5	74	9	14	16	50	5	16	64	11	0,82
GL-080	**PD 25625**	80	91	50	72	94	11	17	16	63	6,5	16	86	14	1,45
GL-100	**PD 25626**	100	111	60	89	113	11	17	20	73	6,5	20	102,5	16	2,60

To Be Phased Out

Compensating Coupling for Piston Rod

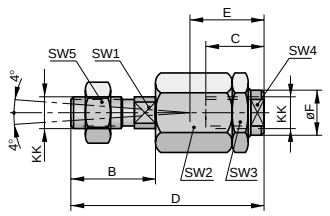

Material: steel

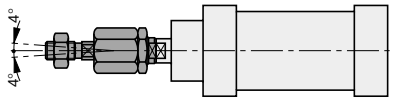

Angle compensation

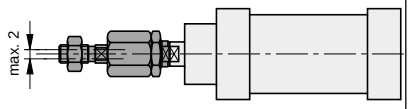

Radial compensation of centre axis

Order Instructions, Dimension Table (mm), Weight

Order Instructions Type	Order No.	to Cyl.Ø	B	C	D	E	ØF	KK	SW1	SW2	SW3	SW4	SW5	Weight (kg)
AK-M 10x1,25	**KY 1129**	32	20	23	70	31	21,5	M10x1,25	12	30	30	19	17	0,218
AK -M12x1,25	**KY 1131**	40	23	23	67	31	21,5	M12x1,25	12	30	30	19	19	0,207
AK -M16x1,5	**KY 1133**	50,63	40	32	112	45	33,5	M16x1,5	19	41	41	30	30	0,637
AK -M20x1,5	**KY 1134**	80,100	40	42	122	56	33,5	M20x1,5	19	41	41	30	30	0,711

Piston Rod Clevis to ISO 8140 (CETOP RP102P)

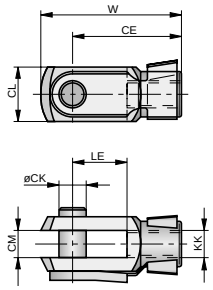

Order Instructions, Dimension Table (mm), Weight

Order Instructions Type	Order No.	to Cyl.-Ø	ØCK	CE	CL	CM	KK	LE	W	Weight (kg)
GK-M10 x 1,25	**KY 6135**	32	10	40	20	10	M10x1,25	20	52	0,08
GK-M12 x 1,25	**KY 6136**	40	12	48	24	12	M12x1,25	24	62	0,125
GK-M16 x 1,5	**KY 6139**	50,63	16	64	32	16	M16x1,5	32	83	0,30
GK-M20 x 1,5	**KY 6141**	80,100	20	80	40	20	M20x1,5	40	105	0,52

Piston Rod Eye to ISO 8139 (CETOP RP103 P)

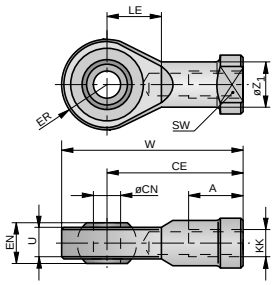

Order Instructions, Dimension Table (mm), Weight

Order Instructions Type	Order No.	to Cyl.-Ø	A	CE	øCN	EN	ER	KK	LE	SW	U	W	$øZ_1$	Weight (kg)
GA-M10 x 1,25	**KY 6147**	32	20	43	10	14	14	M10x1,25	15	17	10,5	57	15	0,072
GA-M12 x 1,25	**KY 6148**	40	22	50	12	16	16	M12x1,25	17	19	12	66	17,5	0,107
GA-M16 x 1,5	**KY 6150**	50,63	28	64	16	21	21	M16x1,5	22	22	15	85	22	0,21
GA-M20 x 1,5	**KY 6151**	80,100	33	77	20	25	25	M20x1,5	26	32	18	102	27,5	0,38

Order Instructions for Basic Cylinder (Without Mounting)

Series	Symbol	Piston-Ø	Order Instructions Type	Order No.
Double acting with adjusting end cushioning for contactless position sensing	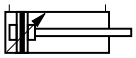	32	**AZ5032/....**	**PA 58300-....**
		40	**AZ5040/....**	**PA 59220-....**
		50	**AZ5050/....**	**PA 60300-....**
		63	**AZ5063/....**	**PA 61240-....**
		80	**AZ5080/....**	**PA 62140-....**
		100	**AZ5100/....**	**PA 63040-....**

Please complete type designation and order no. with stroke length (in mm) (4 digits)

Standard stroke lengths: 0025, 0050, 0080, 0100, 0125, 0160, 0200, 0250, 0320, 0400, 0500

Order Instructions for Cylinder Mountings

Description	Order No. Ø32	Ø40	Ø50	Ø63	Ø80	Ø100
Foot mounting A-..	**PD 27917**	**PD 27918**	**PD 28072**	**PD 28073**	**PD 28074**	**PD 28075**
Rear trunnion mounting B-..	**PD 22704**	**PD 22705**	**PD 22706**	**PD 22707**	**PD 22708**	**PD 22709**
Rear trunnion mounting BA-..	**PD 23412**	**PD 23413**	**PD 23414**	**PD 23415**	**PD 23416**	**PD 23417**
Rear trunnion mounting BAS-..	**PD 23843**	**PD 23844**	**PD 23845**	**PD 23846**	**PD 23847**	**PD 23848**
Front flange mounting C-..	**PD 23403**	**PD 23404**	**PD 23405**	**PD 23406**	**PD 23407**	**PD 23408**
Rear flange mounting D-..	**PD 23403**	**PD 23404**	**PD 23405**	**PD 23406**	**PD 23407**	**PD 23408**
Centre trunnion mounting EN-.. (for the tie rod version AZZ)	**PD 24039**	**PD 24040**	**PD 24041**	**PD 24042**	**PD 24043**	**PD 24044**
Centre trunnion mounting EN-.. (for profile cylinder barrel version AZ)	**PD 39195**	**PD 39196**	**PD 39197**	**PD 39198**	**PD 39199**	**PD 39200**
Security bolt for mountings B,BA,BAS	**KY 6153**	**KY 6154**	**KY 6157**	**KY 6156**	**KY 6158**	**KY 6159**

Delivery information: on delivery all cylinder mountings, except the trunnions mounting are not assembled.

Ordering Example:
Basic Cylinder: AZ5032/500 PA 58300-0500 Foot mounting: A-32 PD 27917

Cylinder

ø 125-250 mm

to ISO6431
and CETOP RP53P**

Versions:
Double acting with cushioning
Double acting with cushioning
for contactless position sensing

Series DZ....

DZ1...

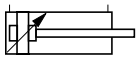

DZ5...

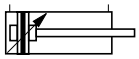

Characteristics according to VDI 3294			Pressures quoted as gauge pressure			
Characteristics	Symbol	Unit	Description			
General Features						
Type			Piston rod cylinder			
Series			DZ1, DZ5			
System			Double acting with cushioning			
Mounting			See drawing			
Tube connection			Thread			
Ambient temperature range	ϑ_{min} ϑ_{max}	°C °C	-20 +80	Note: When using below freezing		
Medium temperature range	ϑ_{max}	°C	+80	point (°C) it is necessary to consult us		
Weight (mass)		kg	See table			
Installation			In any position			
Medium			Filtered and lubricated or filtered and unlubricated compressed air			
Lubrication			Oil mist lubrication compatible with Buna N			
Material: Cylinder tube			Aluminium			
Material: Front/Rear covers			Aluminium			
Material: Piston rod			Steel, hard-chrome plated			
Pneumatic Characteristics						
Nominal pressure	p_n	bar	6			
Operating pressure range	p_{min} p_{max}	bar bar	1 10			
Piston diameter		mm	125	160	200	250
Port size			G 1/2	G 3/4	G 3/4	G 1
Piston rod diameter		mm	32	40	40	50
Piston rod thread			M27x2**	M36x2	M36x2	M42x2
Stroke length		mm	For max. stroke length see load diagram 2.05.002E			
Piston force and air consumption			See data sheet 2.05.001E			
Cushioning			At both ends, infinitely variable			
Cushioning stroke		Cyl.	125	160	200	250
		mm	42	52	52	52

** Standard piston rod thread M27x2 - on request M24x2 to CETOP RP 53 P can also be delivered.

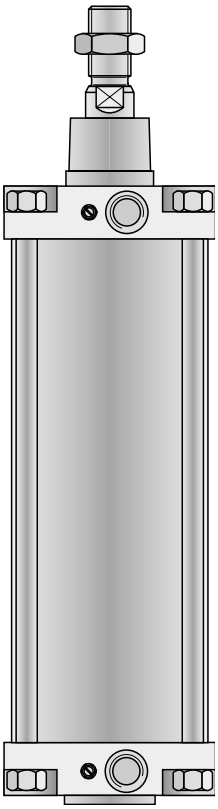

Special versions:
- to CETOP RP53P (piston rod thread M24x2)
- with through piston rod
- longer cushion strokes - on request versions for
- application at approx. +80° to 200°C - on request

Delivery includes:
1 Cylinder
1 Hexagon nut for piston rod thread

Weight (mass) kg

Mounting	Cylinder-Ø 125		160		200		250	
	*1	*2	1	2	1	2	1	2
Basic cylinder	7.2	1.3	12.5	2.05	20	2.2	35	4
A	9.3		16.1		25		on request	
B	8.5		14.9		24			
BA	8.7		15.0		24			
BAS	8.6		14.9		24			
C	8.7		15.0		30			
D	8.7		15.0		30			
EN	10.5		18.3		32			

* 1 = Weight for cylinder with 100 mm stroke
* 2 = Weight for every additional 100 mm stroke length

For cylinder switches see 2.90.0031E, 2.90.032E, 2.90.036E
For product group list see 2.01.001E

A1P186E00DX00X

The right to introduce technical modifications is reserved

HOERBIGER ORIGA

Dimensions of Basic Cylinder

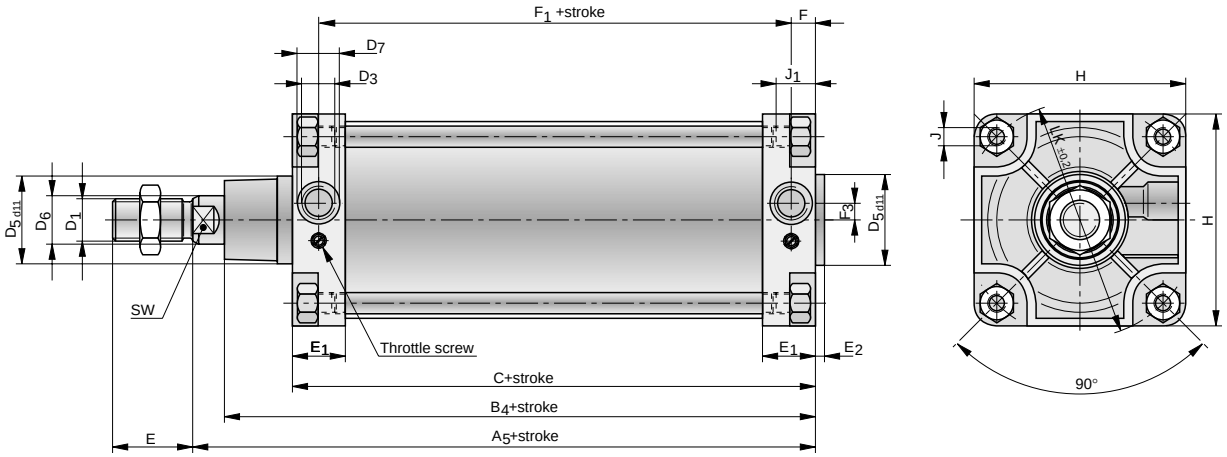

Dimension Table (mm) for Basic Cylinder

Cyl. Ø	A_5+ stroke	B_4+ stroke	C+ stroke	D_1	D_3	ØD_5	ØD_6	ØD_7	E	E_1	E_2	F	F_1+ stroke	F_3	J	J_1 max.	H	ØLK	SW
125	225	205	160	M27x2*	G1/2	60	32	28	54	35	6	19	122	11	M12	18	140	156	27
160	260	230	180	M36x2	G3/4	65	40	33	72	45	6	25	130	11	M16	23	180	198	36
200	275	240	180	M36x2	G3/4	75	40	33	72	45	6	25	130	11	M16	23	220	248	36
250	305	270	200	M42x2	G 1	90	50	40	84	53	10	32	136	21	M20	27	280	311	48

* Standard piston rod thread M27x2 - on request M24x2 to CETOP RP 53 P can also be deliverd.

Dimensions for Mounting A

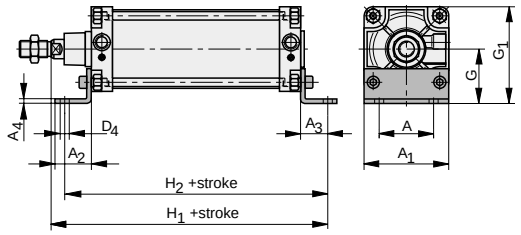

Material: steel, passivated

Dimension Table (mm) for Mounting A

Cyl. Ø	A	A_1	A_2	A_3	A_4	ØD_4	G	G_1	H_1+ stroke	H_2+ stroke
125	90	140	60	45	8	16	90	160	270	250
160	115	180	80	60	8	18	115	205	320	300
200	135	220	100	70	9	22	135	245	345	320
250	165	280	110	75	12	26	165	305	380	350

Dimensions for Mounting B

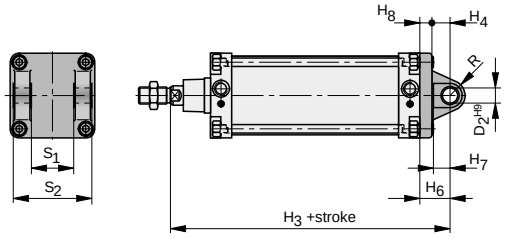

Material: cast aluminium

Dimension Table (mm) for Mounting B

Cyl. Ø	D_2^{H9}	H_3+ stroke	H_4	H_6	H_7	H_8	R	S_1	S_2
125	25	275	30	50	29	20	25	70	130
160	30	315	35	55	34	20	30	90	170
200	30	335	35	60	35	25	31	90	170
250	40	375	45	70	44	25	41	110	200

Dimensions for Mounting BA

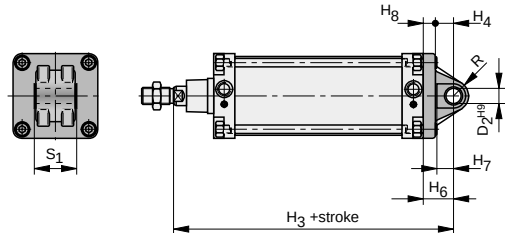

Material: cast aluminium

Dimension Table (mm) for Mounting BA

Cyl. Ø	$ØD_2^{H9}$	H_3+ stroke	H_4	H_6	H_7	H_8	R	S_1
125	25	275	30	50	29	20	25	70
160	30	315	35	55	34	20	30	90
200	30	335	35	60	35	25	31	90
250	40	375	45	70	44	25	41	110

Dimensions for Mounting BAS

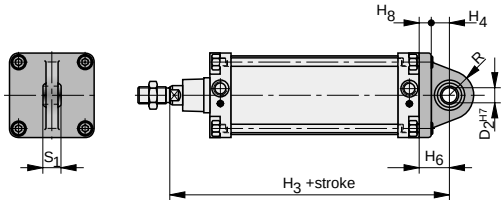

Material: cast aluminium

Dimension Table (mm) for Mounting BAS

Cyl. Ø	$ØD_2^{H7}$	H_3+ stroke	H_4	H_6	H_8	R	S_1
125	25	275	30	50	20	40	31
160	30	315	35	55	20	48	37
200	on request						
250	on request						

Dimensions for Mounting C

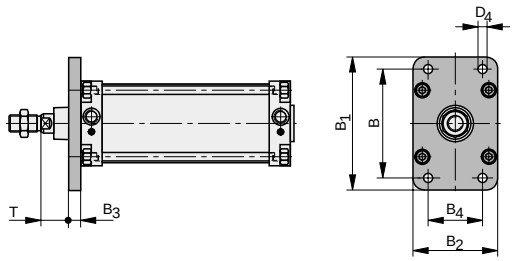

Material: Ø125 cast aluminium
Ø160 - Ø250 steel, passivated

Dimension Table (mm) for Mounting C

Cyl. Ø	B	B_1	B_2	B_3	B_4	$ØD_4$	T
125	180	220	140	20	90	16	45
160	230	280	180	20	115	18	60
200	270	315	220	25	135	22	70
250	330	380	280	25	165	26	80

Dimensions for Mounting D

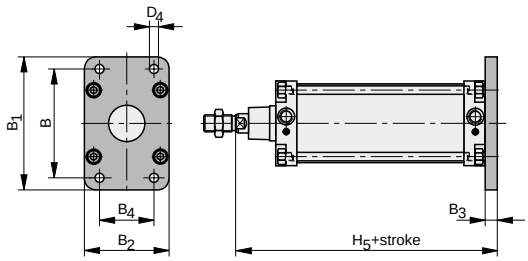

Material: Ø125 cast aluminium
Ø160 - Ø250 steel, passivated

Dimension Table (mm) for Mounting D

Cyl. Ø	B	B_1	B_2	B_3	B_4	$ØD_4$	H_5+ stroke
125	180	220	140	20	90	16	245
160	230	280	180	20	115	18	280
200	270	315	220	25	135	22	300
250	330	380	280	25	165	26	330

Dimensions for Mounting EN

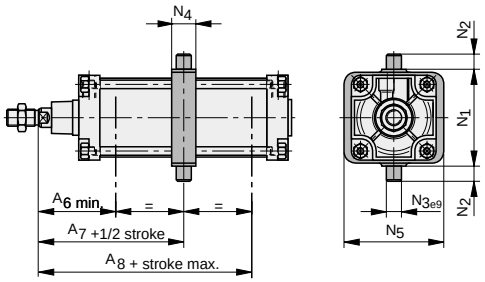

Material: nodular graphite cast iron, passivated

Dimension Table (mm) for Mounting EN

Cyl. Ø	A_6 min	A_7+ 1/2stroke	A8+ stroke	N_1	N_2	$N3_{eg}$	N_4	N_5
125	125	145	165	160	25	25	40	165
160	150	170	190	200	32	32	45	210
200	165	185	205	250	32	32	50	260
250	195	205	210	320	40	40	55	320

Note:
When ordering please give exact dimension A_7.
Mounting is assembled when delivered.

Instructions for mounting EN:
In order to avoid faulty operation of the reed switches, a min. distance of 10 to 20 mm has to be kept between switch and EN-mounting when fastening them to the cylinder.

Pivot for Mounting B to CETOP RP 107 P

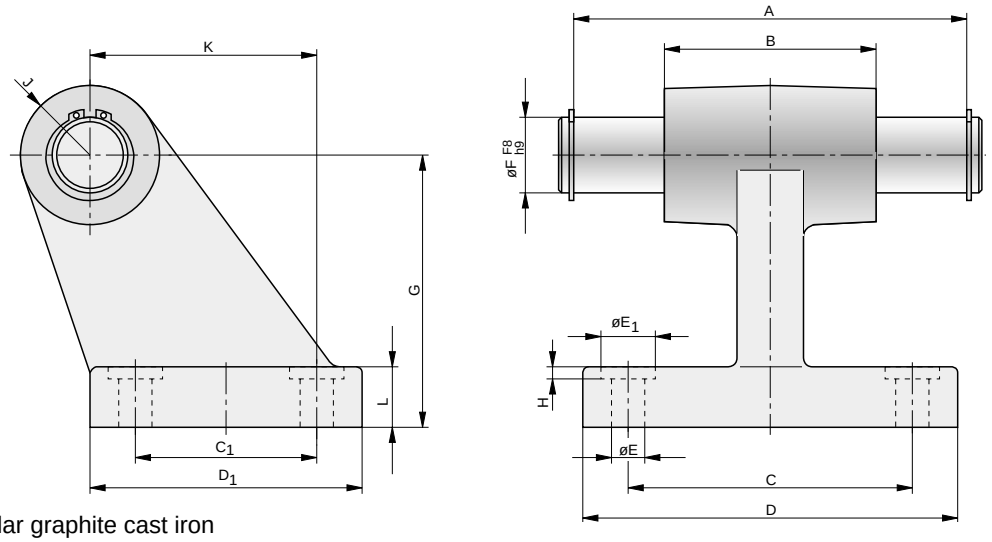

Material: nodular graphite cast iron

Order Instructions, Dimension Table (mm), Weight

Order Instructions Type	Order No.	Cyl. Ø	A	B	C	C_1	D	D_1	ØE	$ØE_1$	$ØF^{F8}_{h9}$	G	H_{max}	J	K	L	Weight (kg)
GLN-125	**PD 24027**	125	130	70	94	60	124	90	11	18	25	90	4	23	70	20	3.0
GLN-160	**PD 24028**	160	170	90	118	88	156	126	14	20	30	115	4	36	97	25	6.5
GLN-200	**PD 25174**	200	170	90	122	90	162	130	16	24	30	135	4	36	105	30	8.0
GLN-250	**PD 25765**	250	200	110	150	110	200	160	20	30	40	165	4	40	128	35	13.5

Pivot for Mounting EN

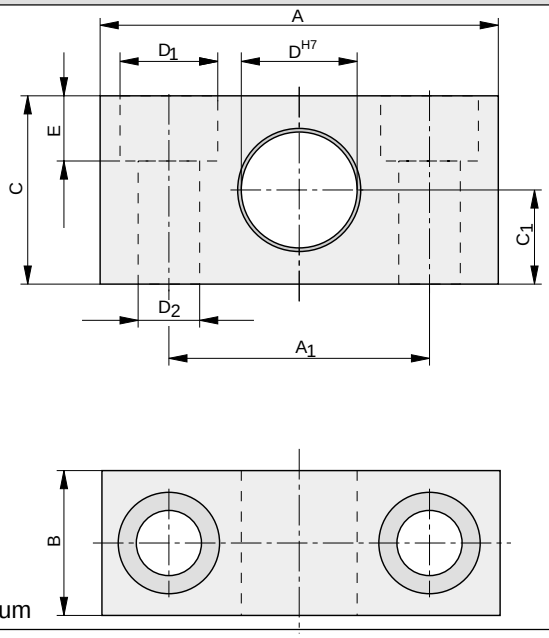

Material: Ø125 cast aluminium
Ø160 / Ø200 anodized aluminium

Order Instructions, Dimension Table (mm), Weight

Order Instructions Type	Order No.	Cyl. Ø	A	A_1	B	C	C_1	$ØD^{H7}$	$ØD_1$	$ØD_2$	E	Weight (kg)
EL-125	**PD 23384**	125	75	50	28	40	20	25	19	13	13	0.175
EL-160/200	**PD 24425**	160/200	92	60	35	60	30	32	26	18	17.5	0.350
EL-250	**PD 25763**	250	140	90	40	70	35	40	33	22	21.5	0.500

Piston Rod Clevis to CETOP RP 102 P

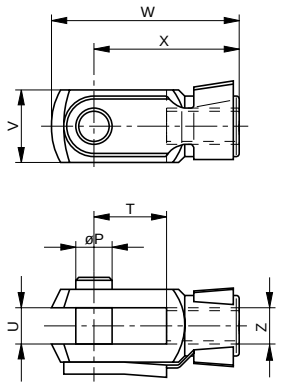

Material: Galvanized steel

Order Instructions, Dimension Table (mm), Weight

Order Instructions Type	Order No.	Cyl.-Ø	ØP	T	U	V	W	X	Z	Weight (kg)
GKN-M24x2	**KY 6142**	125	25	50	25	50	132max.	100	M24x2	1.08
GKN-M27x2	**KY 6866**	125	30	54	30	55	148max.	112	M27x2	1.5
GKN-M36x2	**KY 6867**	160, 200	35	72	36	70	188max.	144	M36x2	2.9
GKN-M42x2	**KY 6868**	250	40	84	40	85	245max.	168	M42x2	6.0

Piston Rod Eye to CETOP RP 103 P

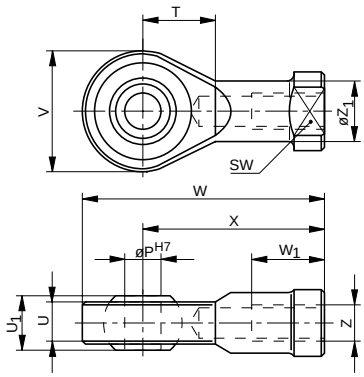

Material: Galvanized steel

Order Instructions, Dimension Table (mm), Weight

Order Instructions Type	Order No.	Cyl.-Ø	$Øp^{H7}$	T	U	U_1	V_{max}	W_{1x}	W_{1max}	X	Z	$ØZ_1$	SW	Weight (kg)
GAN-M24x2	**KY 6152**	125	25	31	22	31	60	124	42	94	M24x2	33.5	36	0.65
GAN-M27x2	**KY 6862**	125	30	36	25	37	70	145	51	110	M27x2	40	41	1.0
GAN-M36x2	**KY 6863**	160, 200	35	41	28	43	80	165	56	125	M36x2	46	50	1.6
GAN-M42x2	**KY 6864**	250	40	46	33	49	90	187	60	142	M42x2	53	55	3.5

Order Instructions

Basic Cylinder (Without Mounting)

Series	Symbol	Standard	Piston-Ø	Order Instructions Type	Order No.
Double acting with adjustable end cushioning	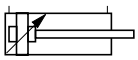	ISO	125	**DZ1125/....**	**PA 53530-....**
		CETOP	125	**DZ1125/....**	**PA 53500-....**
		ISO	160	**DZ1160/....**	**PA 54000-....**
		ISO	200	**DZ1200/....**	**PA 54500-....**
		ISO	250	**DZ1250/....**	**PA 55000-....**
Double acting with adjustable end cushioning, for contactless position sensing	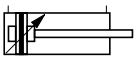	ISO	125	**DZ5125/....**	**PA 53540-....**
		CETOP	125	**DZ5125/....**	**PA 53510-....**
		ISO	160	**DZ5160/....**	**PA 54010-....**
		ISO	200	**DZ5200/....**	**PA 54510-....**
		ISO	250	**DZ5250/....**	**PA 55010-....**

Complete type designation and order no. with stroke length in mm (4 digits)

Standard stroke length: 0025, 0050, 0080, 0100, 0125, 0160, 0200, 0250, 0320, 0400, 0500

Cylinder with Mounting EN

Series	Symbol	Standard	Piston-Ø	Order Instructions Type	Order No.
Double acting with adjustable end cushioning	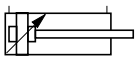	ISO	125	**DZ1125EN/.../....**	**PA 53536-....**
		CETOP	125	**DZ1125EN/.../....**	**PA 53506-....**
		ISO	160	**DZ1160EN/.../...**	**PA 54006-.../...**
		ISO	200	**DZ1200EN/.../...**	**PA 54506-.../...**
		ISO	250	**DZ1250EN/.../...**	**PA 55006-.../...**
Double acting with adjustable end cushioning, for contactless position sensing	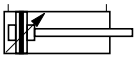	ISO	125	**DZ5125EN/.../...**	**PA 53546-.../...**
		CETOP	125	**DZ5125EN/.../...**	**PA 53516-.../...**
		ISO	160	**DZ5160EN/.../...**	**PA 54016-.../...**
		ISO	200	**DZ5200EN/.../...**	**PA 54516-.../...**
		ISO	250	**DZ5250EN/.../...**	**PA 55016-.../...**

Complete type designation and order no. with stroke length in mm (3 digits)

Give dimension A_7 with type designation and order no.

Cylinder Mountings

Description	Order No. Ø125	Ø160	Ø200	Ø250
Foot mounting A-...	**PD 22026**	**PD 22027**	**PD 24792**	**PD 25758**
Rear trunnion mounting B-...	**PD 22034**	**PD 22035**	**PD 24990**	**PD 25710**
Rear trunnion mounting BA-...	**PD 23418**	**PD 22628**	**PD 24999**	**PD 25759**
Rear trunnion mounting with spherical bearing BAS-...	**PD 23849**	**PD 23850**	**PD 25766**	**PD 25760**
Front flange mounting C-...	**PD 23409**	**PD 23410**	**PD 24924**	**PD 25761**
Rear flange mounting D-...	**PD 23409**	**PD 23410**	**PD 24924**	**PD 25761**
Centre trunnion mounting EN-...	**PD 23591**	**PD 23592**	**PD 24923**	**PD 25762**

Delivery information: on delivery all cylinder mountings, except the trunnion mounting are not assembled.

Ordering Example:			
	Basic Cylinder:	**DZ5125/0500**	**PA 53510-0500**
	Foot mounting:	**A-125**	**PD 22026**

Cylinder

ø 32-100 mm

with through piston rod

Versions:
Double acting with cushioning for contactless position sensing

Series AZD....

AZD5...

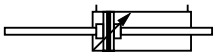

Characteristics according to VDI 3294			Pressures quoted as gauge pressure					
Characteristics	Symbol	Unit	Description					
General Features								
Type			Cylinder with through piston rod					
Series			AZD5					
System			Double acting with cushioning for contactless position sensing					
Mounting			See reverse page					
Tube connection			Thread					
Ambient temperature range	ϑ_{min} ϑ_{max}	°C °C	-20 +80	Note: When using below freezing				
Medium temperature range	ϑ_{max}	°C	+80	point (°C) it is necessary to consult us				
Installation			In any position					
Medium			Filtered and lubricated or filtered and unlubricated compressed air					
Lubrication			Oil mist lubrication compatible with Buna N					
Material: Cylinder tube			Aluminium					
Material: Front/Rear covers			Aluminium					
Material: Piston rod			Stainless steel					
Pneumatic Characteristics								
Nominal pressure	p_n	bar	6					
Operating pressure range	p_{min} p_{max}	bar bar	1 10					
Piston diameter		mm	32	40	50	63	80	100
Port size			G1/8	G1/4	G1/4	G3/8	G3/8	G1/2
Piston rod diameter		mm	12	16	20	20	25	25
Piston rod thread			M10 x1.25	M12 x1.25	M16 x1.5	M16 x1.5	M20 x1.5	M20 x1.5
Stroke length			For max. stroke length see load diagram 2.05.002E					
Piston force and air consumption			See data sheet no. 2.05.001E					
Cushioning			At both ends, infinitely variable					
Cushioning stroke length		Cyl.-Ø	32	40	50	63	80	100
		mm	20	25	25	25	28	30

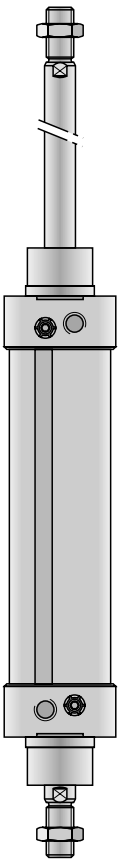

Application examples
- if something has to be operated by the 2nd piston rod
- if adjustable limit stops have to mounted outside the cylinder
- if the piston rod is stationary and the barrel has to move
- if exactly the same force is needed for the forward and reverse stroke (in normal double acting cylinders the piston areas differ)

All the assembly parts belong to HOERBIGER's tried and tested DIN cylinders series.

Delivery includes:
1 Cylinder
2 Hexagon nuts for piston rod thread

The magnetic switch is not included - please order separately.

A1P508E00IX00X

The right to introduce technical modifications is reserved

For cylinder series AZ5 see 2.29.001E
For cylinder switches see 2.90.040E, 2.90.041E
For product group list see 2.01.001E

HOERBIGER ORIGA

Dimensions for Basic Cylinder

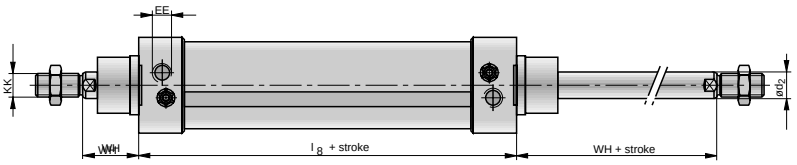

Dimension Table (mm)

Cyl.-Ø	$l_{8+stroke}$	$WH_{+stroke}$	WH	KK	Ød_2	EE
32	94	26	26	M10x1.25	12	G1/8
40	105	30	30	M12x1.25	16	G1/4
50	106	37	37	M16x1.5	20	G1/4
63	121	37	37	M16x1.5	20	G3/8
80	128	46	46	M20x1.5	25	G3/8
100	138	52	52	M20x1.5	25	G1/2

For all further dimensions see 2.29.001E

Mounting

Foot Mounting A

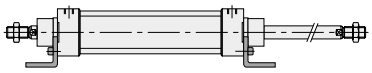

Material: steel, passivated

Foot Flange MountingC

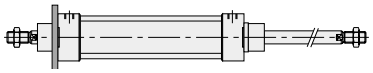

Material: cast aluminium

Centre Trunnion Mounting EN to ISO 6431

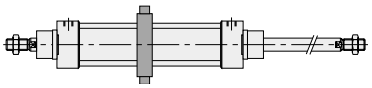

Material: nodular graphite cast iron, passivated

Order Instructions

Basic Cylinder (Without Mounting)

Series	Symbol	Piston-Ø	Order Instructions Type	Order No.
Double acting with adjustable end cushioning for contactless position sensing	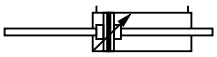	32	**AZD5032/....**	**PA 58320-....**
		40	**AZD5040/....**	**PA 59240-....**
		50	**AZD5050/....**	**PA 60320-....**
		63	**AZD5063/....**	**PA 61260-....**
		80	**AZD5080/....**	**PA 62160-....**
		100	**AZD5100/....**	**PA 63060-....**

Complete type designation and order no. with stroke length in mm (4 digits)

Standard stroke lengths 0025, 0050, 0080, 0100, 0125, 0160, 0200, 0250, 0320, 0400, 0500

Cylinder Mountings

Description	Order No. Ø32	Ø40	Ø50	Ø63	Ø80	Ø100
Foot mounting A-..	**PD 27917**	**PD 27918**	**PD 28072**	**PD 28073**	**PD 28074**	**PD 28075**
Front flange mounting C-..	**PD 23403**	**PD 23404**	**PD 23405**	**PD 23406**	**PD 23407**	**PD 23408**
Centre trunnion mounting EN-..	**PD 39195**	**PD 39196**	**PD 39197**	**PD 39198**	**PD 39199**	**PD 39200**

Delivery information: on delivery all cylinder mountings, except the trunnion mounting are not assembled.

Ordering Example:			
	Basic Cylinder:	**AZD5032-0500**	**PA 58320-0500**
	Foot Mounting:	**A-32**	**PD 27917**

Multiple Position Cylinder

ø 32-100 mm

Versions:
Double acting wih cushioning for contactless position sensing

Series AZZ..../.../...

AZZ5.../.../...

Characteristics according to VDI 3294			Pressures quoted as gauge pressure					
Characteristics	Symbol	Unit	Description					
General Features								
Type			Piston rod cylinder					
Series			AZZ5					
System			Double acting with cushioning for contactless position sensing					
Mounting			see basic cylinder					
Tube connection			Thread					
Ambient temperature range	ϑ_{min} ϑ_{max}	°C °C	-20 +80	Note: When using below freezing				
Medium temperature range	ϑ_{max}	°C	+80	point (°C) it is necessary to consult us				
Weight (mass)		kg	See table					
Installation			In any position					
Medium			Filtered and lubricated or filtered and unlubricated compressed air					
Lubrication			Oil mist lubrication compatible with Buna N					
Material: Cylinder tube			Aluminium					
Material: Front/Rear covers			Aluminium					
Material: Piston rod			Stainless steel					
Pneumatic Characteristics								
Nominal pressure	p_n	bar	6					
Operating pressure range	p_{min} p_{max}	bar bar	0,5 10					
Piston diameter		mm	32	40	50	63	80	100
Port size			G1/8	G1/4	G1/4	G3/8	G3/8	G1/2
Piston rod diameter		mm	12	16	20	20	25	25
Piston rod thread			M10 x1.25	M12 x1.25	M16 x1.5	M16 x1.5	M20 x1.5	M20 x1.5
Stroke length		mm	For max. stroke length see piston rod load diagram 2.05.002E					
Piston force and air consumption			See data sheet no. 2.05.001E					
Cushioning			Infinitely variable at both ends					
Cushioning stroke		Cyl.Ø	32	40	50	63	80	100
length		mm	21	25	28	30	30	37

Weight (mass) kg

Mounting	Cylinder-Ø 30		40		50		63		80		100	
	*1	*2	1	2	1	2	1	2	1	2	1	2
Basic cylinder	0.95	0.25	1.30	0.55	2.20	0.65	2.80	0.75	4.60	1.15	6.70	1.40

* 1 = Weight for cylinder with 100 mm stroke
* 2 = Weight for every additional 100 mm stroke length

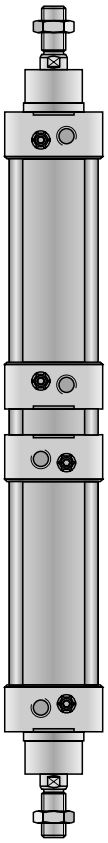

A normal double acting cylinder has two end positions.
Frequently three or more positions are required.
For this purpose two HOERBIGER-DIN-cylinders are assembled to form multiple position cylinders.
The strokes of the individual cylinders are optional.
Multiple position cylinders usually consist of two cylinders with the same diameter.

Delivery includes:
1 Cylinder
2 Hexagon nuts for piston rod thread

The magnetic switch is not included - please order separately.

For cylinder series AZ5 see 2.29.001E
For cylinder switches (Reed-contact and magneto-resistiv) see 2.90.031E, 2.90.032E, 2.90.036E
For product group list see 2.01.001E

A1P509E00IX00X

The right to introduce technical modifications is reserved

HOERBIGER ORIGA

Dimensions (mm)

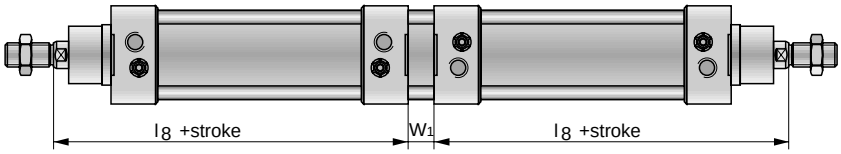

Dimensions (mm)

Cyl.-Ø	W_1	$l_{8+stroke}$	Port size
32	12	120	G1/8
40	12	135	G1/4
50	15	143	G1/4
63	14	158	G3/8
80	18	174	G3/8
100	18	189	G1/2
for all further dimensions see 2.29.001E			

Order Instructions	AZZ5	032	/	100	/	200	Ordering Example

Series

AZZ5	

1

2

Piston Diameter (mm)

032	32
040	40
050	50
063	63
080	80
100	100

Stroke length of cylinder 1 and 2

Specified in mm
Standard strokes 25, 50, 80, 100, 125, 160, 200, 250, 320, 400, 500

Cylinder

ø 32-100 mm

Non Rotating

Characteristics according to VDI 3294			Pressures quoted as gauge pressure						
Characteristics		Symbol	Unit	Description					
General Features									
Type				Piston rod cylinder					
Series				NZKV 6					
Series NZKV 6...				Double acting without cushioning for contactless position sensing					
Mounting				See drawing					
Tube connection				Thread					
Ambient temperature range		ϑ_{min} ϑ_{max}	°C °C	-20 +80	Note: When using below freezing				
Mediums-temperature range		ϑ_{max}	°C	+80	point (°C) it is necessary consult us				
Weight (mass)			kg	See table					
Installation				In any position					
Medium				Filtered and lubricated or filtered and unlubricated compressed air					
Lubrication				Oil mist lubrication compatible with polyurethane					
Material	Cylinder tube			Aluminium					
	Front/Rear covers			Aluminium					
	Piston rod			Stainless steel					
Pneumatic Characteristics									
Nominal pressure		p_n	bar	6					
Operating pressure		p_{min} p_{max}	bar bar	0,5 10					
Piston diameter			mm	32	40	50	63	80	100
Port size				G1/8	G1/8	G1/8	G1/8	G1/8	G1/4
Piston rod diameter			mm	12	16	20	20	25	25
Stroke length			mm	see order instructions					
Piston force and air consumption				see Data-Sheet 2.05.001					
Cushioning				Elastomer cushioning at both ends					
Transverse/Torque load		max.	N/Nm	see diagramm					

Weight (mass) kg

Mounting	Cylinder -Ø 32		40		50		63		80		100	
	*1	*2	1	2	1	2	1	2	1	2	1	2
Basic Cyl.	0,42	0,050	0,57	0,065	0,83	0,091	1,38	0,108	2,00	0,147	3,20	0,192
B	0,52		0,67		0,98		1,58		2,40		3,80	
BA	0,62		0,77		0,93		1,78		2,80		4,20	
BAS	0,57		0,77		0,93		1,68		2,50		4,10	
D	0,57		0,67		0,88		1,73		2,50		4,10	

*1 = Cylinder weight (10 mm stroke)
*2 = Weight per further 10 mm stroke length

For cylinder switches see 2.90.040E, 2.90.041E

Versions:
- For contactless position sensing as standard

Series NZKV ....

NZKV 6...

Special versions:
High temperature version (+150°)

The cylinder profile has grooves in which, depending on stroke length, one more magnetic proximity sensors can be mounted for sensing the end positions or intermediate positions of the magnetic piston.

Proximity sensors are not included - please order these separately.

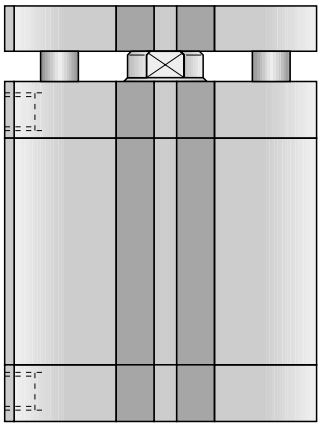

A1P637E00JZ00X

The right to introduce technical modifications is reserved

HOERBIGER ORIGA

Transverse Moment Load (N) in relation to the stroke

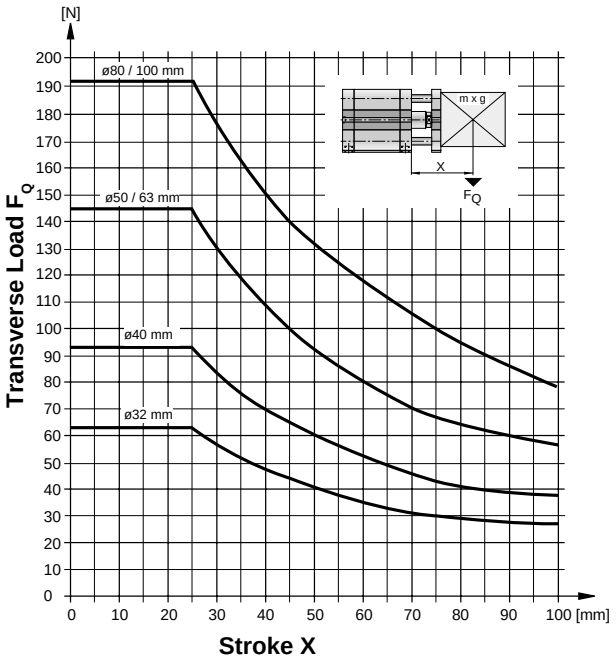

Note: In combination with attached masses, we recommend the use of external stops

Torque Moment Load (Nm) in relation to the stroke

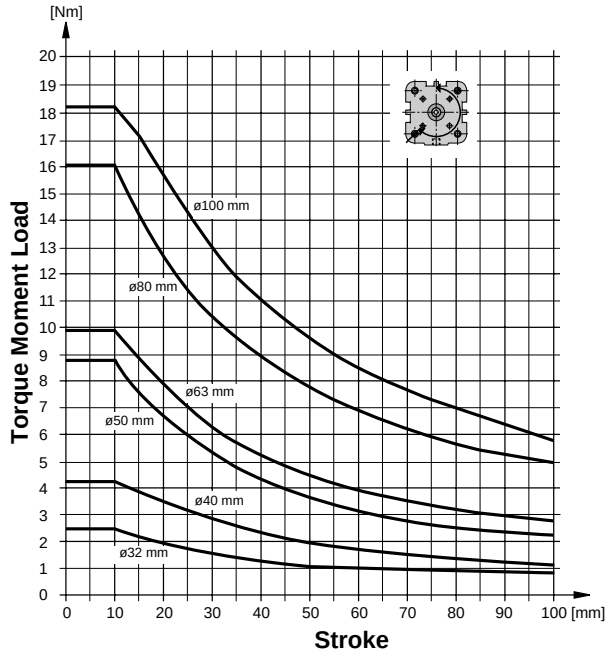

Dimensions for Basic Cylinder

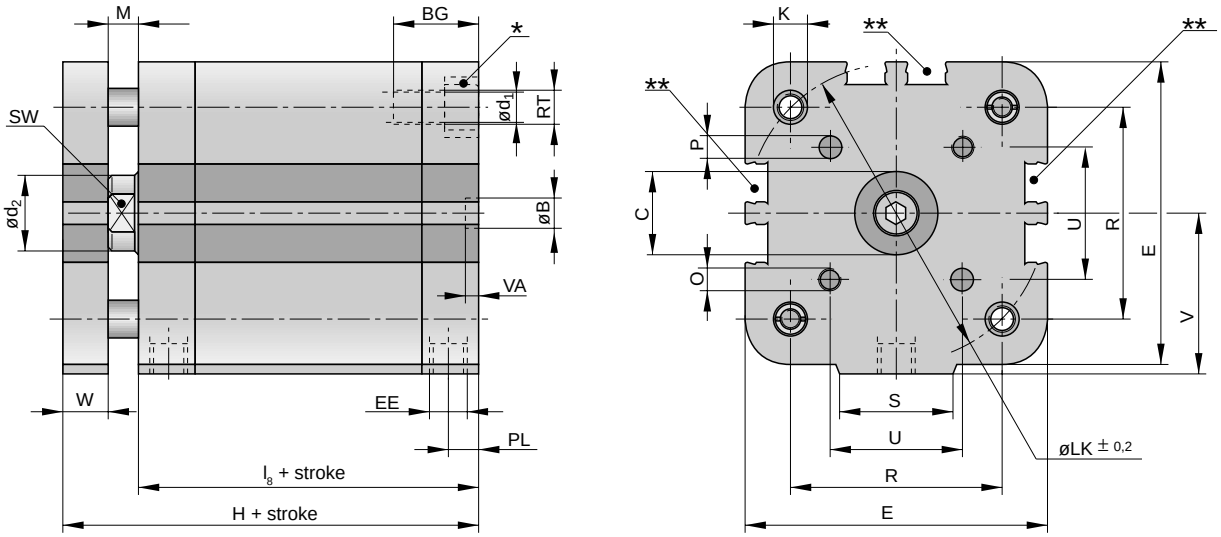

* Mounting screws to DIN 912 can be flush-countersunk
** Cylinder diameters 32, 40, 50 mm: only 1 groove in the middle

Dimension Table (mm) for Basic Cylinder

Cyl. ø	øB H9	BG	øC H9	$ød_1$	$ød_2$	E	EE	H +stroke	K	l_8 +stroke	øLK	M	O	øP	PL H8	R	RT	S	SW	U	V	VA	W
32	6	21	17	5,5	12	50	G1/8	60,5	9	44,5	46	5,9	M5	5	8	32,5	M6	21	10	19,8	26,5	4	10
40	6	21	17	5,5	16	57	G1/8	62	9	45,5	54	6,5	M5	5	8	38	M6	22	13	23,3	30	4	10
50	6	22,5	22	6,5	20	67,5	G1/8	65	9	45,5	66	7,5	M6	6	8	46,5	M8	25	17	29,7	35,75	4	12
63	8	22,5	22	6,5	20	81	G1/8	69,5	9	50	80	8	M6	6	8	56,5	M8	30	17	35,4	43,5	4	12
80	8	27,5	28	8,5	25	98	G1/8	78	12	56	102	8,5	M8	8	8,5	72	M10	40	19	46	53	4	14
100	8	32,5	30	8,5	25	119	G1/4	90,5	12	66,5	126	10	M10	10	10,5	89	M10	50	22	56,6	62,5	4	14

Dimensions for Mounting B

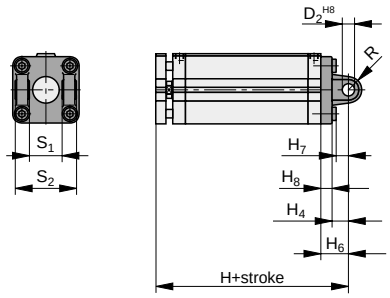

Material: cast aluminium

Dimension Table (mm) for Mounting B

Cyl.-Ø	ØD H8	H_3+ stroke	H_4	H_6	H_7	H_8	R	S_1	S_2
32	10	82,5	12	22	11	10	9	26	45
40	12	87	15	25	14	10	11	28	52
50	12	92	16	27	15	11	12	32	60
63	16	101	21	32	20	11	15	40	70
80	16	114,5	22	36	21	14	16	50	90
100	20	131,5	25	41	24	16	20	60	110

Dimensions for Mounting BA

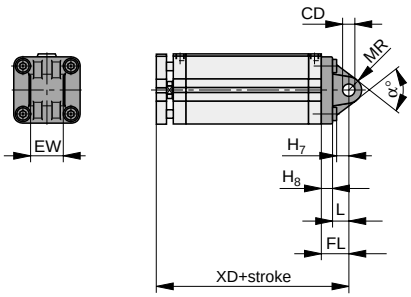

Material: cast aluminium

Dimension Table (mm) for Mounting BA

Cyl.-Ø	øCD H8	EW	FL	H_7	H_8	L	MR	XD +stroke	a°
32	10	26	22	11	10	12	10,5	82,5	60
40	12	28	25	14	10	15	13	87	60
50	12	32	27	15	11	16	13	92	70
63	16	40	32	20	11	21	17	101	60
80	16	50	36	20	15	21	17	114,5	70
100	20	60	41	24	16	25	21	131,5	70

Dimensions for Mounting BAS

Rear trunnion mounting with spherical bearing

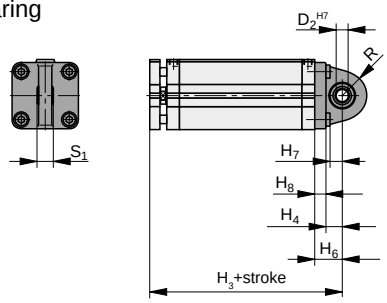

Material: cast aluminium

Dimension Table (mm) for Mounting BAS

Cyl.-Ø	$ØD_2$ H7	H_3+ stroke	H_4	H_6	H_7	H_8	R	S_1
32	10	82,5	12	22	11	10	18	14
40	12	87	15	25	14	10	21	16
50	12	92	16	27	15	11	23	16
63	16	101	21	32	20	11	27	21
80	16	114,5	21	36	20	15	29	21
100	20	131,5	25	41	24	16	34	25

Dimensions for Mounting D

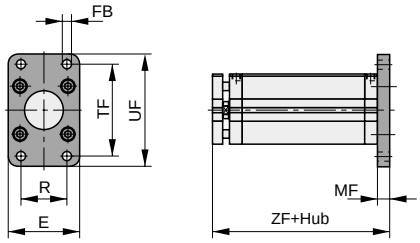

Material: cast aluminium

Dimension Table (mm) for Mounting D

Cyl.-Ø	øFB	E	MF	R	TF	UF	ZF +stroke
32	7	50	10	32	64	79	70,5
40	9	56	10	36	72	90	72
50	9	70	12	45	90	110	77
63	9	77	12	50	100	120	81
80	12	100	16	63	126	153	94,5
100	14	120	16	75	150	178	106,5

Pivot (series GLN) for Mounting B to VDMA 24562

for 90° angle

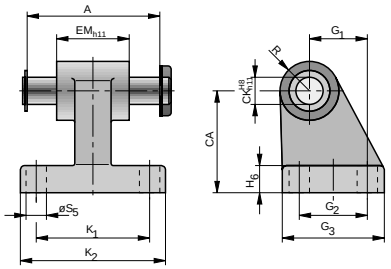

Material: cast aluminium

Adapterplate for Mounting S9-Valves G1/8 and G1/4

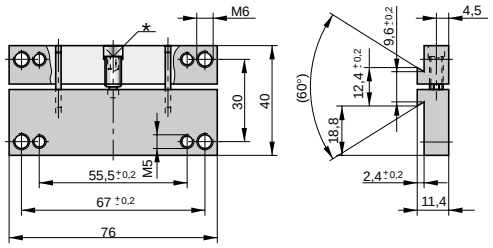

Order No.: PD 40372 * Allan screw SW 2,5

Order Instructions, Dimension Table (mm), Weight – Pivot Series GLN

Order Instructions Type	Order No.	Cyl.-Ø	A	CA	CK^{H8}_{h11}	EM_{h11}	G_1	G_2	G_3	H_6	K_1	K_2	R_1	$øS_5$	Weight (kg)
GLN-032	**PD 40844**	32	46	32	10	26	21	18	31	8	38	50	10	6,6	0,092
GLN-040	**PD 40845**	40	53	36	12	28	24	22	35	10	41	53	11	6,6	0,131
GLN-050	**PD 40846**	50	61	45	12	32	33	30	45	12	50	64	13	9	0,193
GLN-063	**PD 40847**	63	71	50	16	40	37	35	50	12	52	66	15	9	0,305
GLN-080	**PD 40848**	80	91	60	16	50	47	40	60	14	66	84	15	11	0,460
GLN-100	**PD 40849**	100	111	70	20	60	55	50	70	15	76	94	19	11	0,840

Order Instructions for Basic Cylinder (Without Mounting)

Series	Symbol	Piston-Ø	Order Instructions Type	Order-No.
Double acting without adjustable end cushioning, for contactless position sensing		32	**NZKV 6032/...**	**PA 58450-....**
		40	**NZKV 6040/...**	**PA 59370-....**
		50	**NZKV 6050/...**	**PA 60450-....**
		63	**NZKV 6063/...**	**PA 61390-....**
		80	**NZKV 6080/...**	**PA 62290-....**
		100	**NZKV 6100/...**	**PA 63190-....**

Complete type designation and order no. with stroke length in mm (4- digits)

Standard stroke length: 0005, 0010,0015,0020, 0025, 0030, 0040, 0050, 0060, 0080

Order Instructions for Cylinder Mountings

Description	Order No. Ø32	Ø40	Ø50	Ø63	Ø80	Ø100
Rear trunnion mounting B-..	**PD 22704**	**PD 22705**	**PD 22706**	**PD 22707**	**PD 22708**	**PD 22709**
Rear trunnion mounting BA-..	**PD 23412**	**PD 23413**	**PD 23414**	**PD 23415**	**PD 23416**	**PD 23417**
Rear trunnion mounting BAS-..	**PD 23843**	**PD 23844**	**PD 23845**	**PD 23846**	**PD 23847**	**PD 23848**
Rear flange mounting D-..	**PD 23403**	**PD 23404**	**PD 23405**	**PD 23406**	**PD 23407**	**PD 23408**
Security bolt for mountings B,BA,BAS	**KY 6153**	**KY 6154**	**KY 6157**	**KY 6156**	**KY 6158**	**KY 6159**

Delivery information: on delivery all cylinder mountings, except the trunnion mounting are not assembled

Ordering Example: Basic Cylinder: NZKV 6032/50PA 58450-0050 Rear trunnion mounting B: B-32 PD 22704

Twin Rod Cylinder

ø 25 mm

Version:
Double acting with cushioning for contactless position sensing

Series RDV....

RDV5...

Characteristics according to VDI 3294			Pressures quoted as gauge pressure
Characteristics	Symbol	Unit	Description
General Features			
Type			Twin rod cylinder
Series			RDV
System			Double acting with cushioning for contactless position sensing
Mounting			See drawing
Tube connection			Thread
Ambient temperature range	ϑ_{min} ϑ_{max}	°C °C	-10 +70 — Note: When using below freezing point (°C) ist is necessary to consult us
Medium temperature range	ϑ_{max}	°C	+70
Weight (mass)		kg	See table
Installation			In any position
Medium			Filtered and lubricated or filtered and unlubricated compressed air
Lubrication			Oil mist lubrication compatible with Buna N
Material: Cylinder tube			Aluminium
Material: Front/Rear cover			Aluminium
Material: Piston rod			Stainless steel
Pneumatic Characteristics			
Nominal pressure	p_n	bar	6
Operating pressure range	p_{min} p_{max}	bar bar	1 10
Piston diameter		mm	25
Port size			G1/8
Piston rod diameter		mm	6
Stroke length			Max. strokes see piston rod load diagram
Pressure force at 6 bar		N	265
Tensile force at 6 bar		N	235
Air consumption			See data sheet
Cushioning			At both ends, infinitely variable
Cushioned stroke		mm	17

Weight (mass) kg		
Mounting	Cylinder diameter 25 mm *1	*2
Basic cylinder	0.46	0.08
RA (1 bracket)	0.10	

*1 = Weight for cylinder with 100 mm stroke
*2 = Weight for every additional 100 mm stroke length

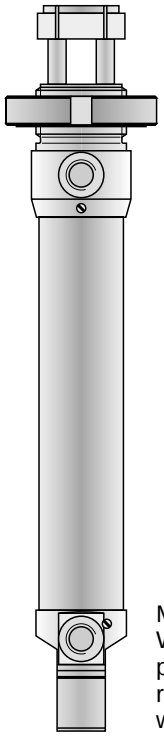

Mounting instruction:
When mounting the front plate onto the piston rods tighten the screws with a torque M_a = 4 Nm

For product group list see 2.01.001E
For cylinder switches see 2.90.040E, 2.90.041E
For piston rod load diagram see 2.05.002E
For piston force and air consumption see 2.05.001E

A1P265E00DX00X

The right to introduce technical modifications is reserved

HOERBIGER ORIGA

Dimensions (mm)

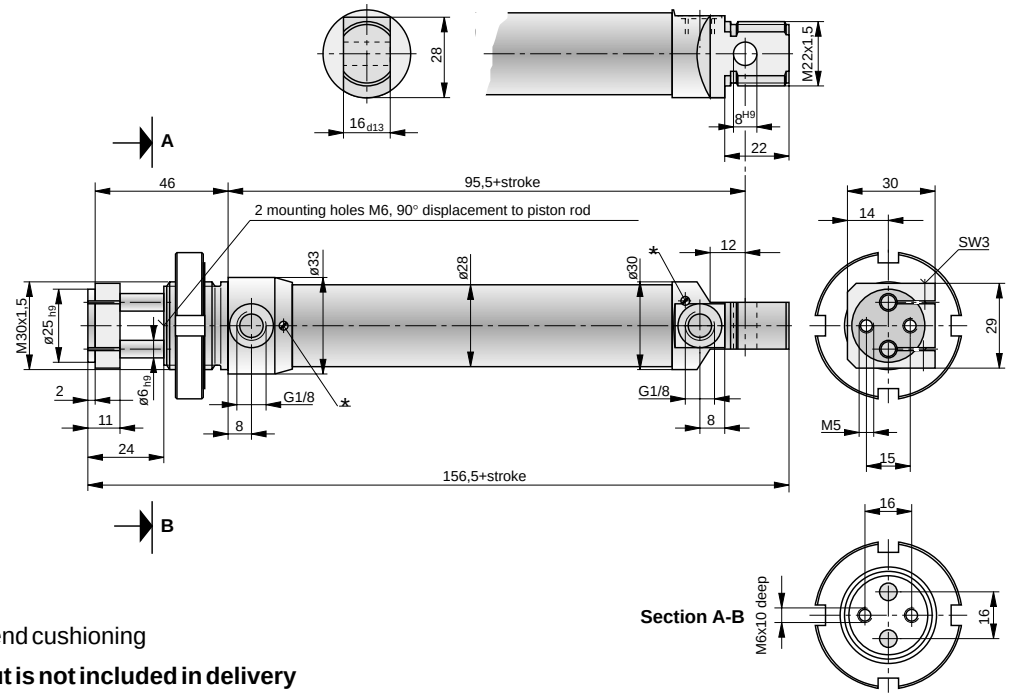

* adjustable end cushioning

Mounting nut is not included in delivery

Foot Mounting (mm)

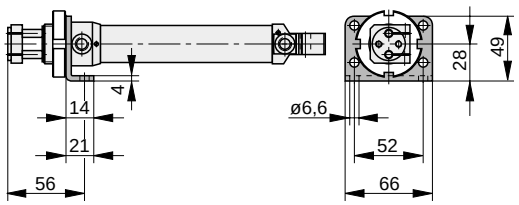

Material: steel, passivated

Rear Trunnion Mounting (mm)

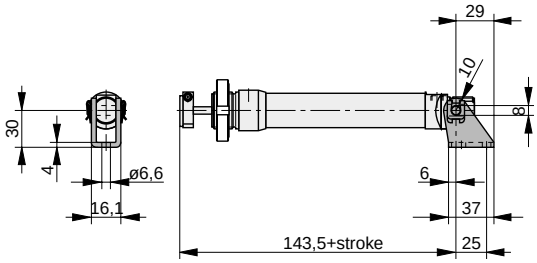

Material: steel, passivated

Order Instructions

Basic Cylinder (Without Mounting)

Description	Symbol	Piston-Ø	Order Instruction Type	Order Instruction Order No.
Double acting with adjustable end cushioning for contactless position sensing		25	**RDV 5025/...**	**PA 50470-....**

Complete type designation and order no. with stroke length (mm) (mm 4-digit)

Standard stroke lengths: 0025, 0050, 0080, 0100, 0125, 0160, 0200, 0250, 0320, 0400, 0500

Cylinder Mountings - Accessories

Description	Order No.
Foot mounting (1 bracket) Type RA 1-32	**KK 29.302**
Rear trunnion mounting Type RB-25	**KZ 1420**
Grooved nut	**ZP 2125**
Ordering Example: Foot mounting RA 1-32 KK 29.302	

Twin Rod Cylinder

ø 32-100 mm

Versions:
Double acting with/without cushioning
Double acting with/without cushioning for contactless position sensing

Series AZV....

AZV1...

AZV2...

AZV5...

AZV6...

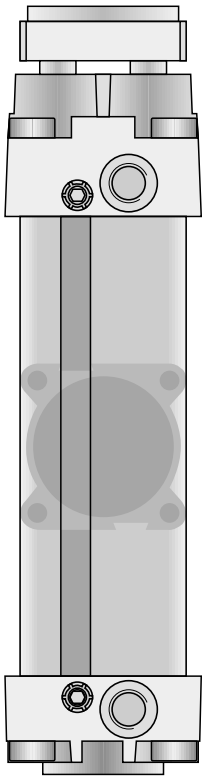

Characteristics according to VDI 3294 Pressures quoted as gauge pressure

Characteristics		Symbol	Unit	Description					
General Features									
Type				Twin rod cylinder					
Series				AZV					
System AZV1...				Double acting with cushioning					
System AZV2...				Double acting without cushioning					
System AZV5...				Double acting with cushioning for contactless position sensing					
System AZV6...				Double acting without cushioning for contactless position sensing					
Mounting				See drawing					
Tube connection				Thread					
Ambient temperature range		ϑ_{min} ϑ_{max}	°C °C	-20 +80	Note: When using below freezing				
Medium temperature range		ϑ_{max}	°C	+80	point (°C) it is necessary to consult us				
Installation				In any position					
Medium				Filtered and lubricated or filtered and unlubricated compressed air					
Lubrication				Oil mist lubrication compatible with Buna N					
Material	Cylinder tube			Aluminium profile					
	Front/Rear covers			Aluminium					
	Piston rod			Steel, hard-chrome plated					
Pneumatic Characteristics									
Nominal pressure		p_n	bar	6					
Operating pressure range		p_{min} p_{max}	bar bar	1 10					
Piston diameter			mm	32	40	50	63	80	100
Port size				G1/8	G1/4	G1/4	G3/8	G3/8	G1/2
Piston rod diameter			mm	8	10	12	16	20	20
Stroke length				For max. stroke length see piston rod load diagram 2.05.002E					
Air consumption				See data sheet no. 2.05.001E					
Cushioning series AZV1, AZV5				At both ends, fully adjustable					
Cushioned stroke length			mm	32	40	50	63	80	100
only for series AZV1, AZV5			mm	20	25	25	25	28	30

Piston Force (N)

Piston-Ø	Pressure force at 6 bar	Tensile force at 6 bar
32	430	380
40	680	590
50	1060	940
63	1680	1466
80	2714	2375
100	4240	3900

For cylinder switches see 2.90.040E, 2.90.041E
For product group list see 2.01.001E
For piston force and air consumption see 2.05.001E
For piston rod load diagram see 2.05.002E

A1P515E00IX00X

The right to introduce technical modifications is reserved

HOERBIGER ORIGA

Weight (mass) kg

Mounting	Ø32		Ø40		Ø50		Ø63		Ø80		Ø100	
	*1	*2	1	2	1	2	1	2	1	2	1	2
Basic Cylinder	0.8	0.25	1.0	0.35	1.7	0.5	2.6	0.6	4.2	0.9	6.2	1.0
A	1.0		1.25		2.0		3.0		5.0		7.1	
B	0.9		1.1		1.85		2.8		4.6		6.8	
BA	1.0		1.2		1.9		3.0		5.0		7.3	
BAS	0.95		1.2		1.9		2.9		4.7		7.0	
D	0.9		1.1		1.85		2.85		4.7		7.0	
EN	1.2		1.7		2.6		3.9		6.0		8.7	

*1 = Weight for cylinder with 100 mm stroke
*2 = Weight for every additional 100 mm stroke length

Dimensions for Basic Cylinder

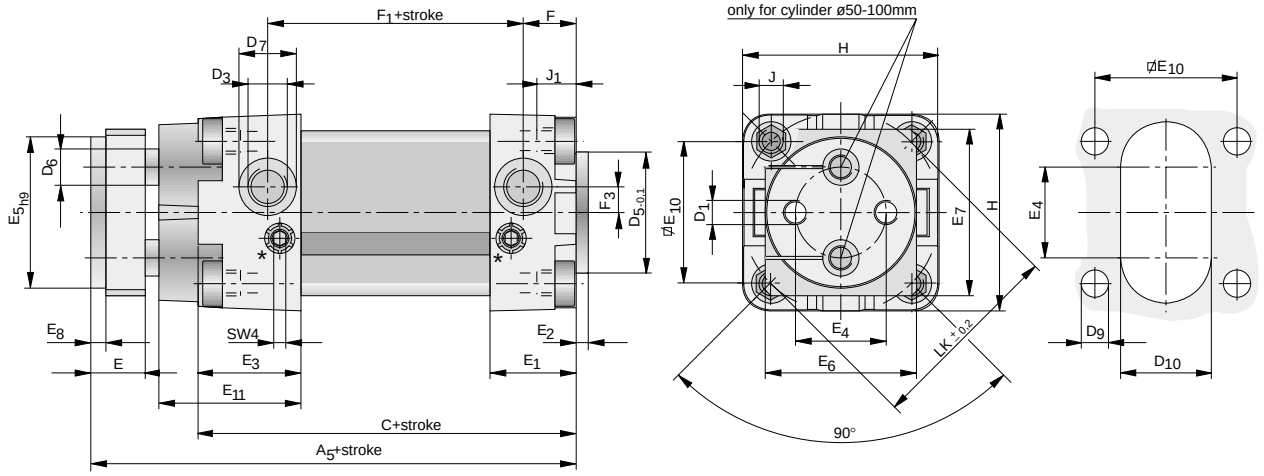

* throttle screw for cushioning (only for series AZV1..., AZV5...)

Dimension Table (mm) Basic Cylinder

Cyl. Ø	A_5+ stroke	C+ stroke	D_1	D_3	ØD_5	ØD_6	ØD_7	ØD_9	D_{10}	E	E_1	E_2	E_3	ØE_4
32	128	102	M 6	G 1/8	30	8	15	7	23	15	29	4	26	19
40	142	112	M 8	G 1/4	35	10	19	7	25	15	27	4	30	22.5
50	151	117	M 8	G 1/4	40	12	19	9	30	18	29	4	34	30
63	161	125	M 10	G 3/8	45	16	23	9	34	22	30	4	34	38
80	174	136	M 12	G 3/8	45	20	23	10	38	22	34	4	39	50
100	181	143	M 12	G 1/2	55	20	28	10	38	22	35	4	40	70

Cyl. Ø	E_{5h9}	E_6	E_7	E_8	E_{10}	E_{11}	F	F_1+ stroke	F_3	J	J_{1max}	H	ØLK
32	32	32	40	4	32.5	34	14.5	74	6	M 6	16	47	46
40	40	40	45	4	38	42	16	77.5	7	M 6	16	53	54
50	50	50	55	5	46.5	47	17.5	77	9.5	M 8	16	65	66
63	63	63	70	5	56.5	45	17.5	87	10	M 8	16	75	80
80	80	80	95	5	72	52	20.5	90	9	M 10	16	95	102
100	100	100	115	5	89	53	19	100	13	M 10	16	115	126

Dimensions for Mounting A

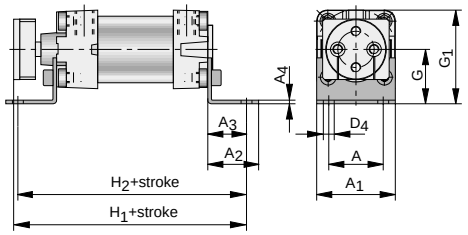

Material: steel, passivated

Dimension Table (mm) for Mounting A

Cyl. Ø	A	A_1	A_2	A_3	A_4	ØD_4	G	G_1	H_1+ stroke	H_2+ stroke
32	32	47	32	24	3	7	32	55.5	152	150
40	36	53	38	28	3	9	36	62.5	170	168
50	45	65	42	32	3	9	45	77.5	183	181
63	50	75	42	32	3	9	50	87.5	193	189
80	63	95	55	41	4	12	63	110.5	215	218
100	75	115	56	41	4	14	71	128.5	222	225

Dimensions for Mounting B

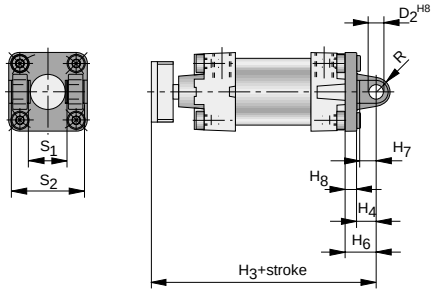

Material: cast aluminium

Dimension Table (mm) for Mounting B

Cyl. Ø	ØD_2^{H8}	H_3+ stroke	H_4	H_6	H_7	H_8	R	S_1	S_2
32	10	150	12	22	11	10	9	26	45
40	12	167	15	25	14	10	11	28	52
50	12	178	16	27	15	11	12	32	60
63	16	193	21	32	20	11	15	40	70
80	16	210	22	36	21	14	16	50	90
100	20	222	25	41	24	16	20	60	110

Dimensions for Mounting BA

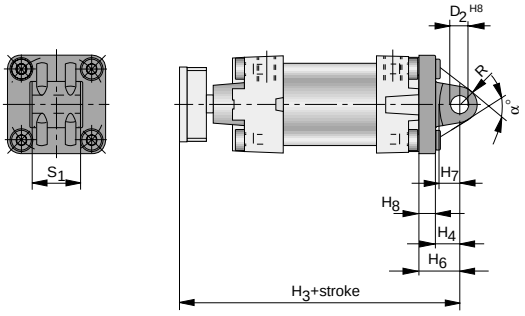

Material: cast aluminium

Dimension Table (mm) for Mounting BA

Cyl. Ø	ØD_2^{H8}	H_3+ stroke	H_4	H_6	H_7	H_8	R	S_1	a°
32	10	150	12	22	11	10	10,5	26	60
40	12	167	15	25	14	10	13	28	60
50	12	178	16	27	15	11	13	32	70
63	16	193	21	32	20	11	17	40	60
80	16	210	21	36	20	15	17	50	70
100	20	222	25	41	24	16	21	60	70

Dimensions for Mounting BAS

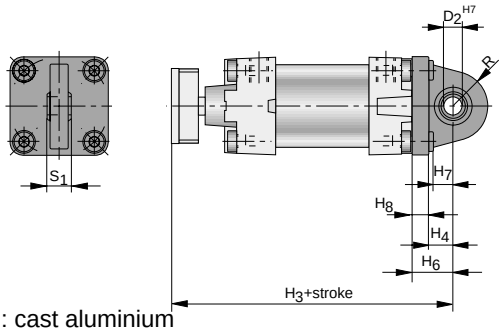

Material: cast aluminium
Rear trunnion mounting with spherical bearing

Dimension Table (mm) for Mounting BAS

Cyl. Ø	ØD_2^{H7}	H_3+	H_4 stroke	H_6	H_7	H_8	R	S_1
32	10	150	12	22	11	10	18	14
40	12	167	15	25	14	10	21	16
50	12	178	16	27	15	11	23	16
63	16	193	21	32	20	11	27	21
80	16	210	21	36	21	15	29	21
100	20	222	25	41	24	16	34	25

Dimensions for Mounting D

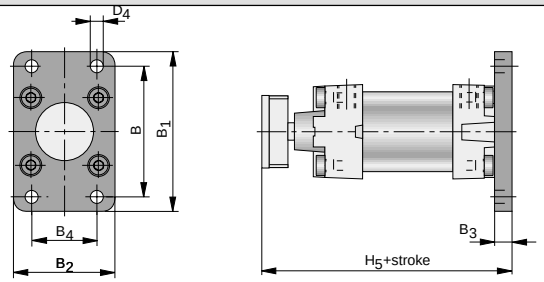

Material: cast aluminium

Dimension Table (mm) for Mounting D

Cyl. Ø	B	B_1	B_2	B_3	B_4	ØD_4	H_5+ stroke
32	64	79	50	10	32	7	138
40	72	90	56	10	36	9	152
50	90	110	70	12	45	9	163
63	100	120	77	12	50	9	173
80	126	153	100	16	63	12	190
100	150	178	120	16	75	14	197

Dimensions for Mounting EN
Flange dimensions to ISO 6431

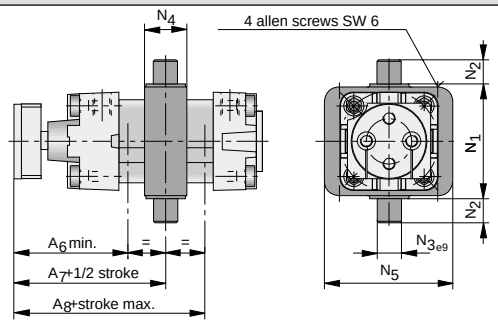

Material: nodular graphite cast iron, passivated

Dimension Table (mm) for Mounting EN

Cyl. Ø	A_{6min}	A_7+ 1/2 stroke	A_{8max} +stroke	N_1	N_2	N_{3e9}	N_4	N_5
32	64	76	87	50	12	12	25	65
40	75	87	99	63	16	16	28	75
50	84	95	106	75	16	16	28	85
63	89	101	112	90	20	20	36	100
80	96	109	121	110	20	20	36	120
100	99	112	125	132	25	25	48	135

After loosening the locking screws, the trunnion mounting can be moved to any position between A_6 and A_8.

Adaptor plate for mounting of S9 Ventilen G1/8 and G1/4

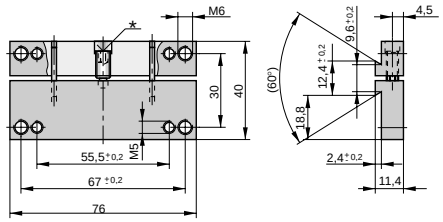

Order No.: PD 40372 * Allen screw SW 2.5

Pivot for Mounting EN

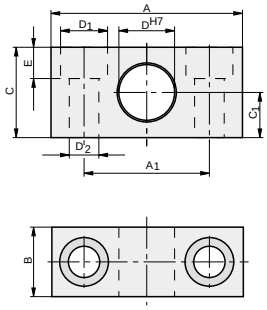

Material: cast aluminium

Order Instructions, Dimension Table (mm), Weight

Order Instructions Type	Order No.	to Cyl.Ø	A	A_1	B	C	C_1	$ØD^{H7}$	$ØD_1$	$ØD_2$	E	Weight (kg)
EL-032	**PD 23381**	32	55	36	20	26	13	12	13.5	8.4	9	0.06
EL-040/050	**PD 23382**	40,50	55	36	20	26	13	16	13.5	8.4	9	0.06
EL-063/080	**PD 23383**	63,80	65	42	25	30	15	20	16.5	10.5	11	0.10
EL-100	**PD 23384**	100	75	50	28	40	20	25	19	13	13	0.175

Pivot for Mounting B to VDMA 24562

for 90°angle

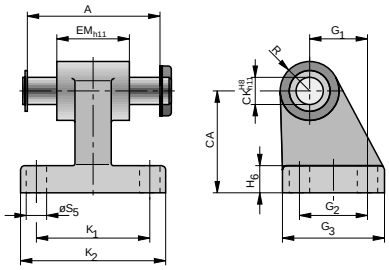

Material: cast aluminium

Order Instructions, Dimension Table (mm), Weight

Order Instructions Type	Order No.	Cyl.-Ø	A	CA	CK^{H8}_{h11}	EM_{h11}	G_1	G_2	G_3	H_6	K_1	K_2	R_1	$øS_5$	Weight (kg)
GLN-032	**PD 40844**	32	46	32	10	26	21	18	31	8	38	50	10	6.6	0.092
GLN-040	**PD 40845**	40	53	36	12	28	24	22	35	10	41	53	11	6.6	0.131
GLN-050	**PD 40846**	50	61	45	12	32	33	30	45	12	50	64	13	9	0.193
GLN-063	**PD 40847**	63	71	50	16	40	37	35	50	12	52	66	15	9	0.305
GLN-080	**PD 40848**	80	91	60	16	50	47	40	60	14	66	84	15	11	0.460
GLN-100	**PD 40849**	100	111	70	20	60	55	50	70	15	76	94	19	11	0.840

Pivot for Mounting B

for 90°angle

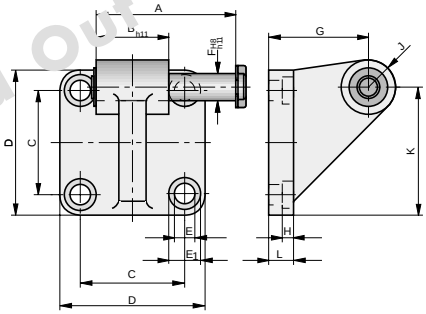

Material: cast iron, passivated

To Be Phased Out

Order Instructions, Dimension Table (mm), Weight

Order Instructions Type	Order No.	Cyl.-Ø	A	B_{h11}	C	D	Ø E	Ø E_1	Ø F^{H8}_{h11}	G	H	J	K	L	Weight (kg)
GL-032	**PD 25621**	32	46	26	32.5	46	7	12	10	32	5	10	39	10	0.21
GL-040	**PD 25622**	40	53	28	38	52	7	12	12	36	5	12	43.5	10	0.315
GL-050	**PD 25623**	50	61	32	46.5	64	9	14	12	45	5	12	56.5	11	0.49
GL-063	**PD 25624**	63	71	40	56.5	74	9	14	16	50	5	16	64	11	0.82
GL-080	**PD 25625**	80	91	50	72	94	11	17	16	63	6.5	16	86	14	1.45
GL-100	**PD 25626**	100	111	60	89	113	11	17	20	73	6.5	20	102.5	16	2.60

To Be Phased Out

Order Instructions

Series	Symbol	Piston-Ø	Order Instructions Type	Order No.
Double acting without adjustable end cushioning		32	**AZV 2032/....**	**PA 58360-....**
		40	**AZV 2040/....**	**PA 59280-....**
		50	**AZV 2050/....**	**PA 60360-....**
		63	**AZV 2063/....**	**PA 61300-....**
		80	**AZV 2080/....**	**PA 62200-....**
		100	**AZV 2100/....**	**PA 63100-....**
Double acting with adjustable end cushioning		32	**AZV 1032/....**	**PA 58350-....**
		40	**AZV 1040/....**	**PA 59270-....**
		50	**AZV 1050/....**	**PA 60350-....**
		63	**AZV 1063/....**	**PA61290-....**
		80	**AZV 1080/....**	**PA 62190-....**
		100	**AZV 1100/....**	**PA 63090-....**
Double acting without adjustable end cushioning, for contactless position sensing	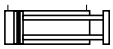	32	**AZV 6032/....**	**PA 58380-....**
		40	**AZV 6040/....**	**PA 59300-....**
		50	**AZV 6050/....**	**PA 60380-....**
		63	**AZV 6063/....**	**PA 61320-....**
		80	**AZV 6080/....**	**PA 62220-....**
		100	**AZV 6100/....**	**PA 63120-....**
Double acting with adjustable end cushioning, for contactless position sensing,		32	**AZV 5032/....**	**PA 58370-....**
		40	**AZV 5040/....**	**PA 59290-....**
		50	**AZV 5050/....**	**PA 60370-....**
		63	**AZV 5063/....**	**PA 61310-....**
		80	**AZV 5080/....**	**PA 62210-....**
		100	**AZV 5100/....**	**PA 63110-....**

Complete type designation and order no. with stroke length in mm (4 digits)

Standard stroke lengths: 0025, 0050, 0080, 0100, 0125, 0160, 0200, 0250, 0320, 0400, 0500

Cylinder Mountings

Description	Bestell-Nr. Ø32	Ø40	Ø50	Ø63	Ø80	Ø100
Foot mounting A-..	**PD 27917**	**PD 27918**	**PD 28072**	**PD 28073**	**PD 28074**	**PD 28075**
Rear trunnion mounting B-..	**PD 22704**	**PD 22705**	**PD 22706**	**PD 22707**	**PD 22708**	**PD 22709**
Rear trunnion mounting BA-..	**PD 23412**	**PD 23413**	**PD 23414**	**PD 23415**	**PD 23416**	**PD 23417**
Rear trunnion mounting BAS-..	**PD 23843**	**PD 23844**	**PD 23845**	**PD 23846**	**PD 23847**	**PD 23848**
Rear flange mounting C/D-..	**PD 23403**	**PD 23404**	**PD 23405**	**PD 23406**	**PD 23407**	**PD 23408**
Centre trunnion mounting EN-..	**PD 39195**	**PD 39196**	**PD 39197**	**PD 39198**	**PD 39199**	**PD 39200**
Pin with security washer for B,BA,BAS	**KY 6153**	**KY 6154**	**KY 6157**	**KY 6156**	**KY 6158**	**KY 6159**

Delivery information: on delivery all cylinder mountings, except the centre trunnion mounting EN are not assembled.

Ordering Example:	**Basic Cylinder:**	**AZV5100/500**	**PA 63110-0500**
	Foot Mounting:	**A-100**	**PD 28075**

Double Twin Rod Cylinder

ø 32-100 mm

with additional piston rod

Versions:
Double acting with/without cushioning
Double acting with/without cushioning for contactless position sensing

Series AZV4D....

AZV4D1...

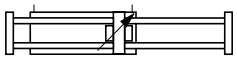

AZV4D2...

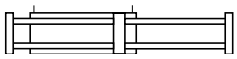

AZV4D5...

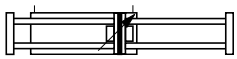

AZV4D6...

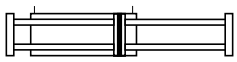

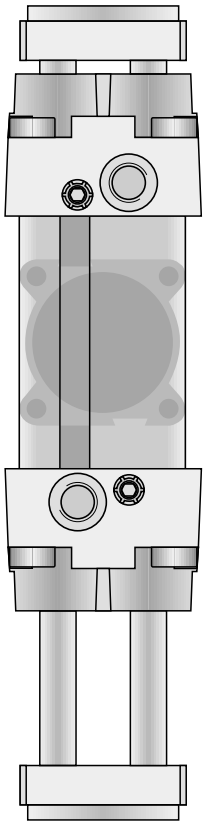

Characteristics according to VDI 3294 Pressures quoted as gauge pressure

Characteristics		Symbol	Unit	Description					
General Features									
Type				Double twin rod cylinder with additional piston rod					
Series				AZV4D					
System AZV4D1...				Double acting with cushioning					
System AZV4D2...				Double acting without cushioning					
System AZV4D5...				Double acting with cushioning for contactless position sensing					
System AZV4D6...				Double acting without cushioning for contactless position sensing					
Mounting				See drawing					
Tube connection				Thread					
Ambient temperature range		ϑ_{min} ϑ_{max}	°C °C	-20 +80	Note: When using below freezing point (°C) it is necessary to consult us				
Medium temperature range		ϑ_{max}	°C	+80					
Installation				In any position					
Medium				Filtered and lubricated or filtered and unlubricated compressed air					
Lubrication				Oil mist lubrication compatible with Buna N					
Material	Cylinder tube			Aluminium profile					
	Front/Rear covers			Aluminium					
	Piston rod			Stainless steel					
Pneumatic Characteristics									
Nominal pressure		p_n	bar	6					
Operating pressure range		p_{min} p_{max}	bar bar	1 10					
Piston diameter			mm	32	40	50	63	80	100
Port size				G1/8	G1/4	G1/4	G3/8	G3/8	G1/2
Piston rod diameter			mm	8	10	12	16	20	20
Stroke length			mm	For max. stroke length see piston rod load diagram 2.05.002E					
Air consumption				See data sheet no 2.05.001E					
Cushioning (AZV4 D1, AZV4 D5 only)				To both sides, infinitely variable					
Cushioned stroke length			mm	32	40	50	63	80	100
(AZV4 D1, AZV4 D5 only)			mm	20	25	25	25	28	30

Piston Force (N)

Piston-Ø	Pressure force at 6 bar	Tensile force at 6 bar
32	380	380
40	590	590
50	940	940
63	1466	1466
80	2375	2375
100	3900	3900

For cylinder switches see 2.90.040E, 2.90.041E
For product group list see 2.01.001E
For piston force and air consumption see 2.05.001E
For piston rod load diagram see 2.05.002E

Data Sheet No. 2.54.001E-1

A1P516E00IX00X

The right to introduce technical modifications is reserved

HOERBIGER ORIGA

Weight (mass) kg

Mounting	Cylinder ø 32		40		50		63		80		100	
	*1	*2	1	2	1	2	1	2	1	2	1	2
Basic Cyl.	1.0	0.3	1.4	0.4	2.3	0.6	3.2	0.9	5.6	1.4	7.4	1.5
A	1.2		1.7		2.6		3.6		6.3		8.3	
EN	1.4		2.1		3.2		4.5		7.5		10.0	

*1 = Weight for cylinder with 100 mm stroke
*2 = Weight for every additional 100 mm stroke length

Direct Mounting on Cylinder Front End Cap - Mounting Cut-Out

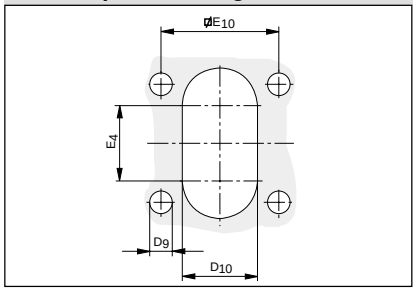

Mountings

Foot mounting A

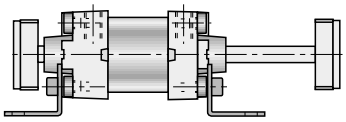

Material: steel, passivated

Centre trunnion mounting EN selon to ISO 6431

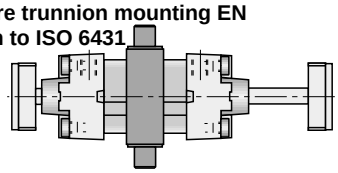

Material: aluminium, anodized

Note on ordering:
Further technical information, order instructions and prices will be supplied on request.

Dimensions for Basic Cylinder

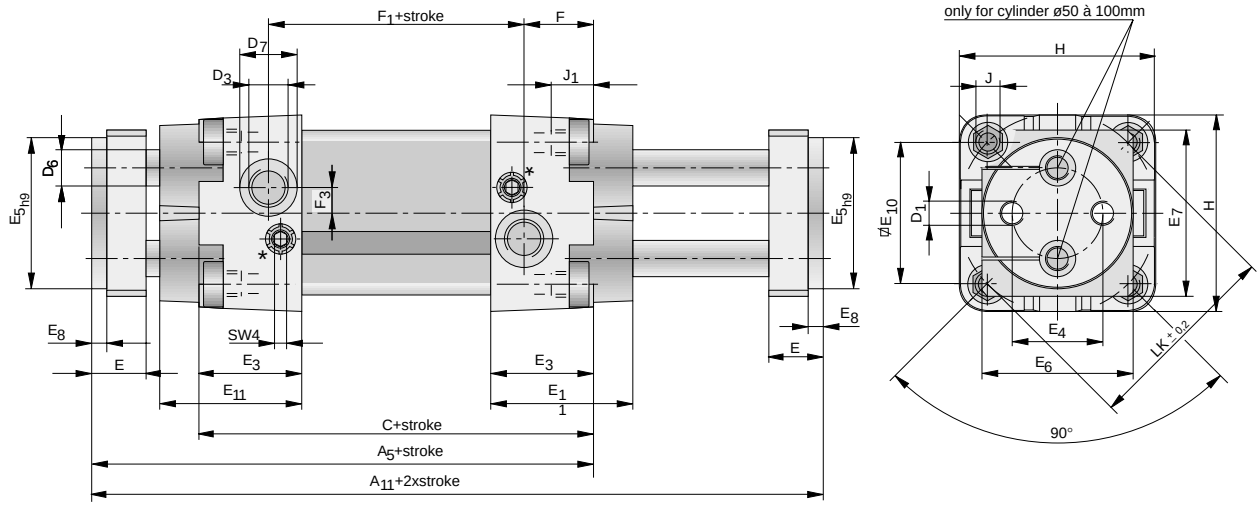

* throttle screw for cushioning (only for series AZV4D 1..., AZV4D 5...)

Dimension Table (mm) Basic Cylinder

Cyl. Ø	A_5+ stroke	A_{11}+ 2xstroke	C+ stroke	D_1	D_3	D_6 Ø	D_7 Ø	D_9 Ø	D_{10}	E	E_3	E_4 Ø	E_5 Ø h9
32	128	154	102	M6	G1/8	8	15	7	23	15	26	19	32
40	142	172	112	M8	G1/4	10	19	7	25	15	30	22.5	40
50	151	185	117	M 8	G 1/4	12	19	9	30	18	34	30	50
63	161	197	125	M 10	G 3/8	16	23	9	34	22	34	38	63
80	174	212	136	M 12	G 3/8	20	23	10	38	22	39	50	80
100	181	219	143	M 12	G 1/2	20	28	10	38	22	40	70	100

Cyl. Ø	E_6	E_7	E_8	E_{10}	E_{11}	F	F_1+ Hub	F_3	J	J_{1max}	H	ØLK
32	32	40	4	32.5	34	17.5	75	6	M 6	16	47	46
40	40	45	4	38	42	19	75	7	M 6	16	53	54
50	50	55	5	46.5	47	23	72	9.5	M 8	16	65	66
63	63	70	5	56.5	45	21.5	83	10	M 8	16	75	80
80	80	95	5	72	52	26	85	9	M 10	16	95	102
100	100	115	5	89	53	24.5	95	13	M 10	16	115	126

Twin Rod Cylinder

ø 32-100 mm

with additional piston rod

Versions:
Double acting with/without cushioning
Double acting with/without cushioning for contactless position sensing

Series AZV3D....

AZV3D1...

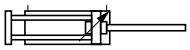

AZV3D2...

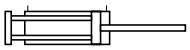

AZV3D5...

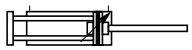

AZV3D6...

Characteristics according to VDI 3294 Pressures quoted as gauge pressure

Characteristics		Symbol	Unit	Description					
General Features									
Type				Twin rod cylinder with additional piston rod					
Series				AZV3D					
System AZV3D1...				Double acting with cushioning					
System AZV3D2...				Double acting without cushioning					
System AZV3D5...				Double acting with cushioning for contactless position sensing					
System AZV3D6...				Double acting without cushioning for contactless position sensing					
Mounting				See drawing					
Tube connection				Thread					
Ambient temperature range		ϑ_{min} ϑ_{max}	°C °C	-20 +80	Note: When using below freezing				
Medium temperature range		ϑ_{max}	°C	+80	point (°C) it is necessary to consult us				
Installation				In any position					
Medium				Filtered and lubricated or filtered and unlubricated compressed air					
Lubrication				Oil mist lubrication compatible with Buna N					
Material	Cylinder tube			Aluminium profile					
	Front/Rear covers			Aluminium					
	Piston rod			Stainless steel					
Pneumatic Characteristics									
Nominal pressure		p_n	bar	6					
Operating pressure range		p_{min} p_{max}	bar bar	1 10					
Piston diameter			mm	32	40	50	63	80	100
Port size				G1/8	G1/4	G1/4	G3/8	G3/8	G1/2
Piston rod diameter			mm	8	10	12	16	20	20
Stroke length				For max. stroke length see piston rod load diagram 2.05.002E					
Air consumption				See data sheet no. 2.05.001E					
Cushioning (AZV3D1, AZV3D5 only)				At both ends, fully adjustable					
Cushioned stroke length			mm	32	40	50	63	80	100
(AZV3D1, AZV3D5 only)			mm	20	25	25	25	28	30

Piston Force (N)

Piston-Ø	Pressure force at 6 bar	Tensile force at 6 bar*
32	374	380
40	570	590
50	890	940
63	1510	1466
80	2464	2375
100	4002	3900

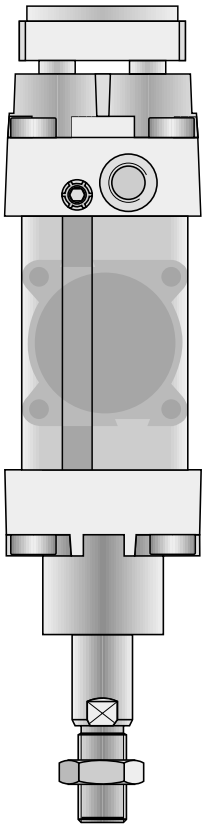

Delivery includes:
1 Cylinder
1 Hexagon nut for piston rod thread

* Figures apply to the piston area with 2 piston rods

For cylinder switches see 2.90.040E, 2.90.041E
For product group list see 2.01.001E
For piston force and air consumption see 2.05.001E
For piston rod load diagram see 2.05.002E

HOERBIGER ORIGA

A1P517E00IX00X

The right to introduce technical modifications is reserved

Weight (mass) kg

Mounting	Cylinder ø 32		40		50		63		80		100	
	*1	*2	1	2	1	2	1	2	1	2	1	2
Basic Cyl.	0.8	0.25	1.0	0.35	1.7	0.5	2.6	0.6	4.2	0.9	6.2	1.0
A	1.0		1.25		2.0		3.0		5.0		7.1	
D	0.9		1.1		1.85		2.8		4.6		6.8	
EN	1.2		1.7		2.6		3.9		6.0		8.7	

*1 = Weight for cylinder with 100 mm stroke
*2 = Weight for every additional 100 mm stroke length

Direct Mounting on Cylinder Front End Cap - Mounting Cut-Out

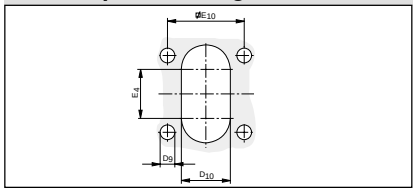

Note on ordering:
Further technical information, order instructions and prices will be supplied on request.

Mountings

Foot mounting A

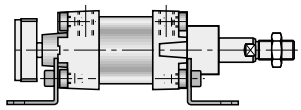

Material: steel, passivated

Rear flange mounting D

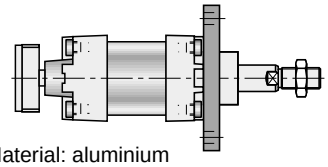

Material: aluminium

Centre trunnion mountingEN selon to ISO 6431

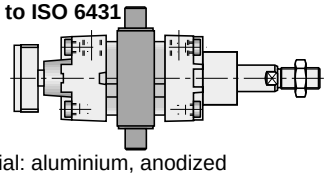

Material: aluminium, anodized

Dimensions for Basic Cylinder

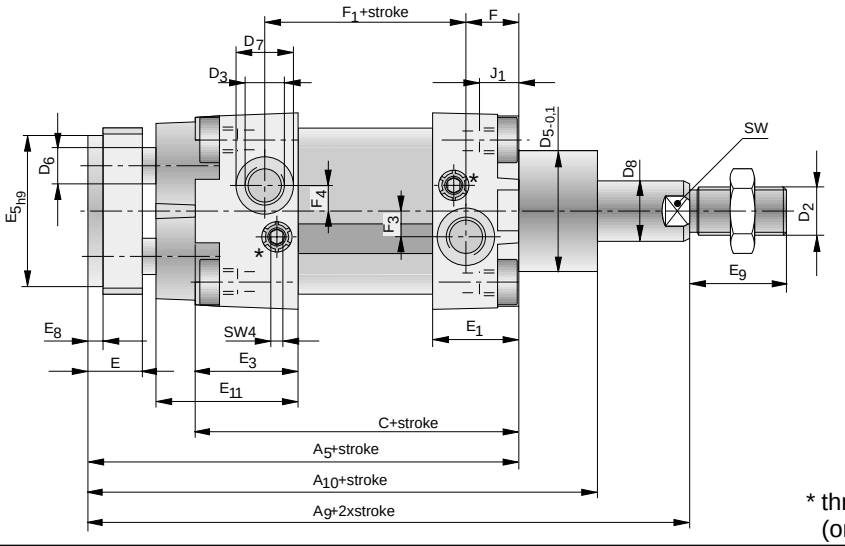

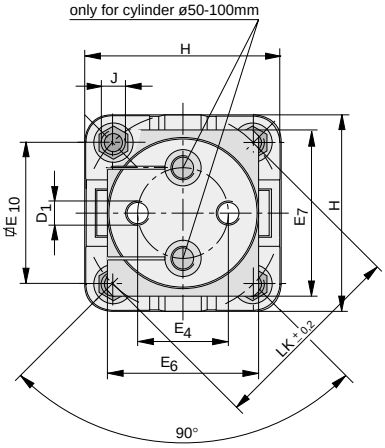

* throttle screw for cushioning
(only for seriesAZV3D1..., AZV3D5...)

Dimension Table (mm) Basic Cylinder

Cyl. Ø	A_5+ stroke	A_9+2x stroke	A_{10}+ stroke	C+ stroke	D_1	D_2	D_3	ØD_5	ØD_6	ØD_7	ØD_8	ØD_9	D_{10}	E	E_1	E_3	ØE_4
32	128	154	146	102	M6	M10x1.25	G1/8	30	8	15	12	7	23	15	23	26	19
40	142	172	163	112	M8	M12x1.25	G1/4	35	10	19	16	7	25	15	27	30	22.5
50	151	188	177	117	M8	M16x1.5	G1/4	40	12	19	20	9	30	18	29	34	30
63	161	198	187	125	M10	M16x1.5	G3/8	45	16	23	20	9	34	22	30	34	38
80	174	220	206	136	M12	M20x1.5	G3/8	45	20	23	25	10	38	22	34	39	50
100	181	232	218	143	M12	M20x1.5	G1/8	55	20	28	25	10	38	22	35	40	70

Cyl. Ø	ØE_{5h9}	E_6	E_7	E_8	E_9	E_{10}	E_{11}	F	F_1+ stroke	F_3	F_4	J	J_{1max}	H	ØLK	SW
32	32	32	40	4	20	32.5	34	14.5	74	5.5	6	M 6	16	47	46	10
40	40	40	45	4	24	38	42	16	77.5	6.5	7	M 6	16	53	54	14
50	50	50	55	5	32	46.5	47	17.5	77	8.5	9.5	M 8	16	65	66	17
63	63	63	70	5	32	56.5	45	17	87	8	10	M 8	16	75	80	17
80	80	80	95	5	40	72	52	20.5	90	9	9	M 10	16	95	102	22
100	100	100	115	5	40	89	53	19	100	13	13	M 10	16	115	126	22

Blocking Cylinder

ø 32-125 mm

to ISO 6431, 6432

Versions:
Double acting
for contactless position sensing
- with end cushioning
- blocking reverse stroke
- blocking forward stroke

Series DZB, DZBA

DZB

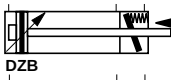

DZBA

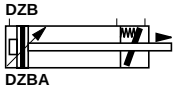

Characteristics according to VDI 3294 Pressures quoted as gauge pressure

Characteristics		Symbol	Unit	Description						
General Features										
Type				Piston rod cylinder with blocking device						
Series				DZB - reverse stroke blocked DZBA - forward stroke blocked						
System				Double acting with cushioning at one end						
Mounting				See drawing						
Tube connection				Thread						
Ambient temperature range		ϑ_{min} ϑ_{max}	°C °C	-20 +80	Note: When using below freezing					
Medium temperature range		ϑ_{max}	°C	+80	point (°C) it is necessary to consult us					
Weight (mass)			kg	See table						
Installation				In any position						
Medium				Filtered and lubricated or filtered and unlubricated air						
Lubrication				Oil mist lubrication compatible with Buna N						
Material	Cylinder tube			Aluminium						
	Front/Rear covers			Aluminium						
	Piston rod			Inductively hardened steel hard-chrome plated						
Pneumatic Characteristics										
Nominal pressure		p_n	bar	6						
Operating pressure range		p_{min} p_{max}	bar bar	2 8						
Releasing pressure			bar	≥4						
Piston diameter			mm	32	40	50	63	80	100	125
Port size				G1/8	G1/4	G1/4	G3/8	G3/8	G1/2	G1/2
Port size control signal				M5	G1/8	G1/8	G1/4	G1/4	G1/4	G1/4
Piston rod diameter			mm	12	16	20	20	25	25	32
Piston rod thread			mm	M10 x1.25	M12 x1.25	M16 x1.5	M16 x1.5	M20 x1.5	M20 x1.5	M27 x2*)
Stroke length				Max. strokes see piston rod load diagram 2.05.002E						
Piston force and air consumption				See data sheet no 2.05.001E						
Static holding force				Corresponds to the respective cylinder force - see 2.05.001E						
Cushioning				At one end, fully adjustable						
Cushioned stroke			Cyl.-Ø	32	40	50	63	80	100	125
length			mm	20	25	25	25	28	30	42

*) Standard piston rod thread M 27x2 - on request also piston rod thread M 24x2 to CETOP RP 53 P can be delivered.

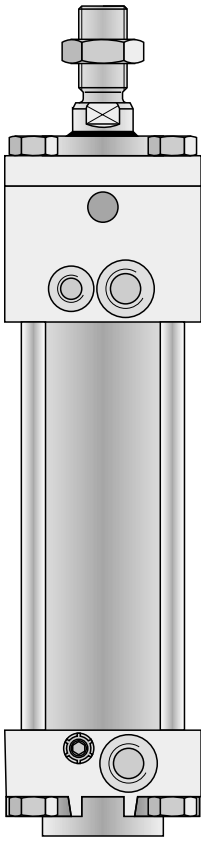

Special versions:
- according to CETOP RP 53 P (Piston rod thread M24x2)
- versions for special applications on request

Delivery includes:
1 Cylinder
1 Hexagon nut for piston rod thread

For cylinder switches see 2.90.031E. 2.90.032E, 2.90. 036E
For product group list see 2.01.001E

Data Sheet No. 2.75.002E-1

A1P263E00J00X

The right to introduce technical modifications is reserved

HOERBIGER ORIGA

Weight (mass) kg

Mounting	Cylinder-Ø 32		40		50		63		80		100		125	
	*1	*2	1	2	1	2	1	2	1	2	1	2	1	2
Basic Cylinder	1.06	0.26	1.45	0.56	2.45	0.67	3.70	0.75	6.00	1.15	9.50	1.40	11.90	1.30
B	1.16		1.55		2.50		3.90		6.40		10.10		13.20	
BA	1.26		1.65		2.55		4.10		6.80		10.60		13.40	
BAS	1.21		1.65		2.55		4.00		6.50		10.30		13.30	
D	1.21		1.55		2.50		3.95		6.50		10.30		13.40	
EN	1.46		2.15		3.25		5.00		7.80		12.10		15.20	

*1 = Weight for cylinder with 100 mm stroke
*2 = Weight for every additional 100 mm stroke length

Dimensions Basic Cylinder - series DZB 5...

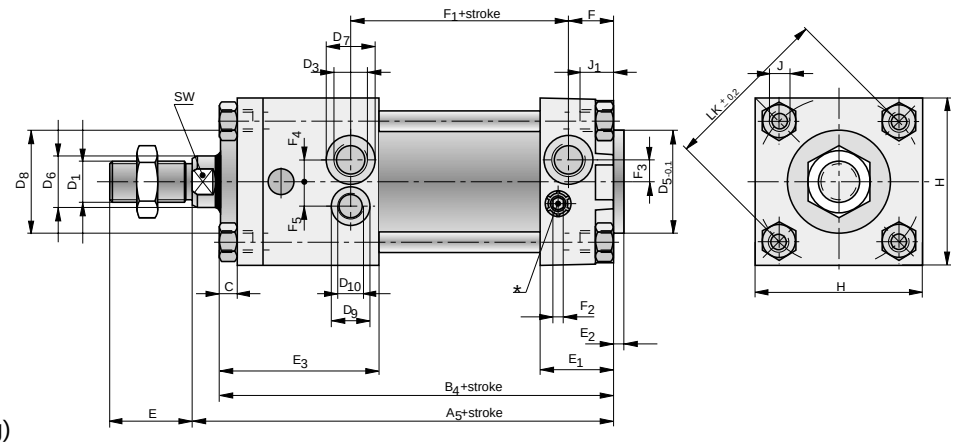

* throttle screw
(for cushioning)

Dimension Table (mm) for Basic Cylinder - series DZB 5…

Cylinder-Ø		A_5+ stroke	B_4+ stroke	C	D_1	D_3	Ø D_5	Ø D_6	Ø D_7	Ø D_8	Ø D_9	D_{10}	E
32	ISO	120	112	5	M10x1.25	G1/8	30	12	15	30	8	M 5	20
40	ISO	135	126	6	M12x1.25	G1/4	35	16	19	35	15	G1/8	24
50	ISO	143	132	6.5	M16x1.5	G1/4	40	20	19	40	15	G1/8	32
63	*)	170	159	6.5	M16x1.5	G3/8	45	20	23	57	19	G1/4	32
80	*)	188	174	8.5	M20x1.5	G3/8	45	25	23	78	19	G1/4	40
100	*)	203	189	8.5	M20x1.5	G1/2	55	25	28	100	19	G1/4	40
125	ISO	255	209	15	M27x2	G1/2	60	32	28	121	19	G1/4	54
125	CETOP	255	209	15	M24x2	G1/2	60	32	28	121	19	G1/4	54

*) Dimensions not to ISO norm

Cylinder-Ø		E_1	E_2	E_3	F	F_1+ stroke	F_2	F_3	F_4	F_5	J	J_1 max	H	LK Ø	SW
32	ISO	29	4	46	14	60	SW4	5.5	6	7	M6	16	47	46	10
40	ISO	27	4	56.5	16	63.5	SW4	7	8	9.5	M6	16	53	54	14
50	ISO	29	4	61	17.5	64.5	SW4	8.5	8	9.5	M8	16	65	66	17
63	*)	30	4	81	17	73	SW4	8	12	11	M8	16	75	80	17
80	*)	34	4	84	20.5	82.5	SW4	9	12.5	15	M10	16	95	102	22
100	*)	35	4	92.5	19	93	SW4	13	15	15	M10	16	115	126	22
125	ISO	40	4	104	19	100	-	11	15	15	M12	18	140	156	27
125	CETOP	40	4	104	19	100	-	11	15	15	M12	18	140	156	27

*) Dimensions not to ISO norm

Dimensions Basic Cylinder - series DZBA5…

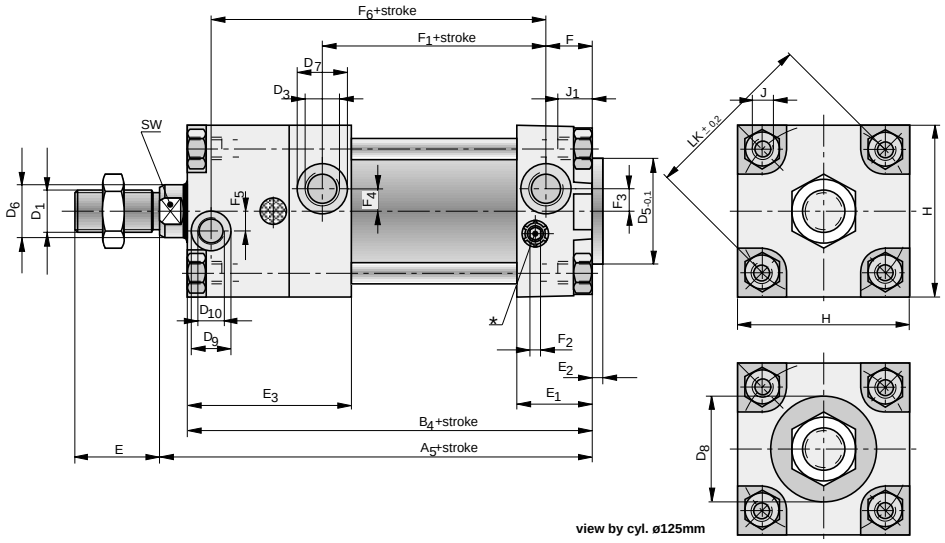

* throttle screw
(for cushioning)

Dimensions Table (mm) for Basic Cylinder - series DZBA5...

Cylinder-Ø		A_5+ stroke	B_4+ stroke	D_1	D_3	Ø D_5	Ø D_6	Ø D_7	Ø D_8	Ø D_9	D_{10}	E	E_1	E_2
32	ISO	120	112	M10x1,25	G1/8	30	12	15	–	8	M 5	20	29	5
40	ISO	135	126	M12x1,25	G1/4	35	16	19	–	15	G1/8	24	27	5
50	ISO	143	132	M16x1,5	G1/4	40	20	19	–	15	G1/8	32	29	6,5
63	*)	170	159	M16x1,5	G3/8	45	20	23	–	19	G1/4	32	30	6
80	*)	188	174	M20x1,5	G3/8	45	25	23	–	19	G1/4	40	34	8
100	*)	203	189	M20x1,5	G1/2	55	25	28	–	19	G1/4	40	35	8
125	ISO	225	209	M27x2	G1/2	60	32	28	100	19	G1/4	54	40	10
125	CETOP	225	209	M24x2	G1/2	60	32	28	100	19	G1/4	54	40	10

*) Dimensions not to ISO norm

Cylinder-Ø		E_3	F	F_1+ stroke	F_2	F_3	F_4	F_5	F_6+ stroke	J	J_1 max	H	LK Ø	SW
32	ISO	46	14	60	SW4	5,5	6	7	94	M6	11	47	46	10
40	ISO	56,5	16	63,5	SW4	7	8	7,5	103,5	M6	11	53	54	14
50	ISO	61	17,5	64,5	SW4	8,5	8	7,5	107	M8	12	65	66	17
63	*)	81	17	73	SW4	8	12	8,5	118	M8	12	75	80	17
80	*)	84	20,5	82,5	SW4	9	12,5	9	129,5	M10	16	95	102	22
100	ISO	92,5	19	93	SW4	13	15	16,5	145,5	M10	16	115	126	22
125	ISO	104	19	100	-	11	15	28	179	M12	18	140	156	27
125	CETOP	104	19	100	-	11	15	28	179	M12	18	140	156	27

*) Dimensions not to ISO norm

Dimensions for Mounting B

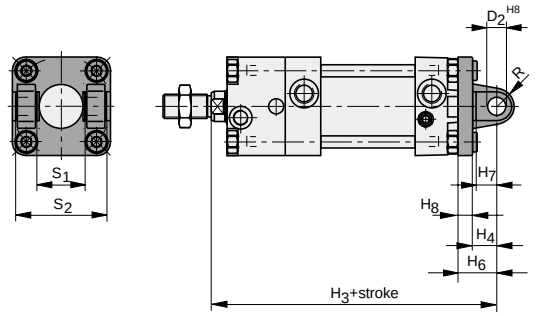

Material: cast aluminium

Dimension Table (mm) for Mounting B

Cyl. Ø	D_2 H8 Ø	H_3+ stroke	H_4	H_6	H_7	H_8	R	S_1	S_2
32	10	142	12	22	11	10	9	26	45
40	12	160	15	25	14	10	11	28	52
50	12	170	16	27	15	11	12	32	60
63	16	202	21	32	20	11	15	40	70
80	16	224	22	36	21	14	16	50	90
100	20	244	25	41	24	16	20	60	110
125	25 H9	275	30	50	29	20	25	70	130

Dimensions for Mounting BA

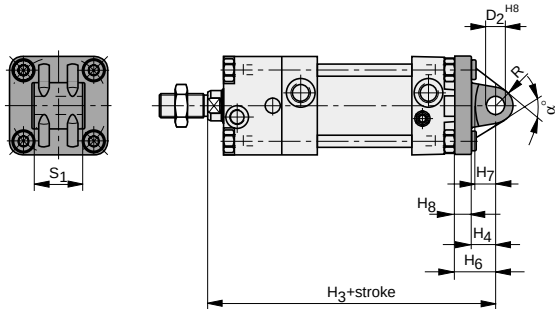

Material: cast aluminium

Dimension Table (mm) for Mounting BA

Cyl. Ø	D_2 H8 Ø	H_3+ stroke	H_4	H_6	H_7	H_8	R	S_1	α°
32	10	142	12	22	11	10	10.5	26	60
40	12	160	15	25	14	10	13	28	60
50	12	170	16	27	15	11	13	32	70
63	16	202	21	32	20	11	17	40	60
80	16	224	21	36	20	15	17	50	70
100	20	244	25	41	24	16	21	50	70
125	25 H9	275	30	50	29	20	25	70	60

Dimensions for Mounting BAS

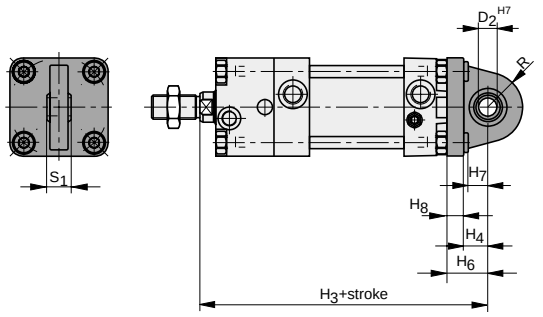

Material: cast aluminium

Dimension Table (mm) for Mounting BAS

Cyl. Ø	D_2 H7 Ø	H_3+ stroke	H_4	H_6	H_7	H_8	R	S_1
32	10*	142	12	22	11	10	18	14
40	12*	160	15	25	14	10	21	16
50	12*	170	16	27	15	11	23	16
63	16	202	21	32	20	11	27	21
80	16	224	21	36	20	15	29	21
100	20	244	25	41	24	16	34	25
125	25	275	30	50	29	20	40	31

* Ø D_2 H8

Dimensions for Mounting D

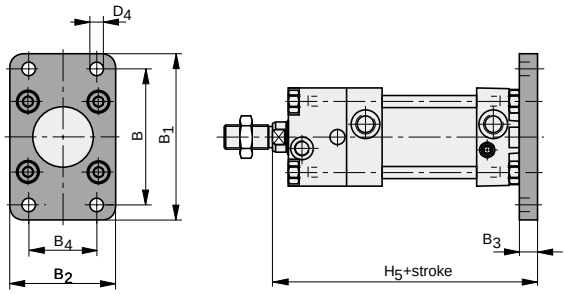

Material: cast aluminium

Dimension Table (mm) for Mounting D

Cyl. Ø	B	B_1	B_2	B_3	B_4	ØD_4	H_5+ stroke
32	64	79	50	10	32	7	130
40	72	90	56	10	36	9	145
50	90	110	70	12	45	9	155
63	100	120	77	12	50	9	182
80	126	153	100	16	63	12	204
100	150	178	120	16	75	14	219
125	180	220	140	20	90	16	245

Dimensions for Mounting EN

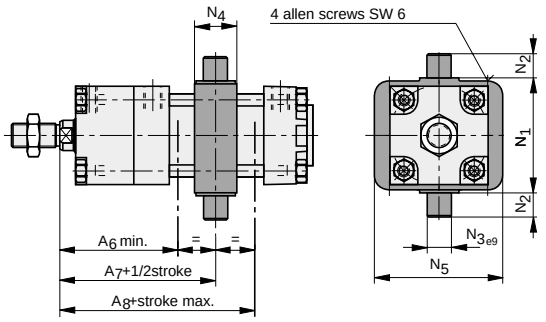

Material: nodular graphite cast iron, passivated

Dimension Table (mm) for Mounting EN

Cyl. Ø	A_6	A_{7+} 1/2stroke	A_{8max} +stroke	N_1 stroke	N_2	ØN_{3e9}	N_4	N_5
32	67	73	79	50	12	12	22	65
40	79,5	83	94	63	16	16	28	75
50	81	90	99	75	16	16	28	85
63	114,5	115	115,5	90	20	20	35	100
80	122	126	130	110	20	20	35	120
100	133	137	141	132	25	25	40	135
125	140	152	164	160	25	25	40	165

Cyl.-Ø 32-100 mm: The trunnion mounting can be moved to any position between A_6 and A_8 after loosening the clamping screws.

Cyl.-Ø 125 mm: When ordering please give exact dimension A_7. Mounting is assembled when delivered.

Pivot for Mounting EN

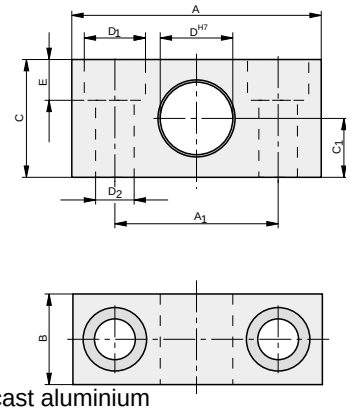

Material: cast aluminium

Order Instructions, Dimension Table (mm), Weight

Order Instructions Type	Order No.	for Cyl.-Ø	A	A_1	B	C	C_1	ØD^{H7}	ØD_1	ØD_2	E	Weight (kg)
EL-032	**PD 23381**	32	55	36	20	26	13	12	13.5	8.4	9	0.06
EL-040/050	**PD 23382**	40,50	55	36	20	26	13	16	13.5	8.4	9	0.06
EL-063/080	**PD 23383**	63,80	65	42	25	30	15	20	16.5	10.5	11	0.10
EL-100/125	**PD 23384**	100,125	75	50	28	40	20	25	19	13	13	0.175

Control Example for Blocking Cylinder

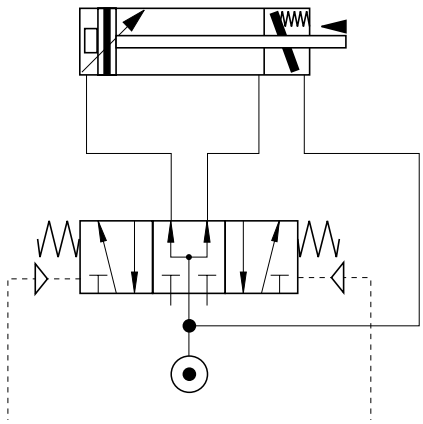

Pivot for Mounting B to VDMA 24562

for 90° rotation

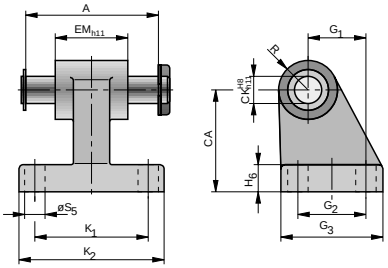

Material: cast aluminium

Order Instructions, Dimension Table (mm), Weight

Order Instructions Type	Order No.	Cyl.-Ø	A	CA	CK H8 h11	EM h11	G_1	G_2	G_3	H_6	K_1	K_2	R_1	øS_5	Weight (kg)
GLN-032	**PD 40844**	32	46	32	10	26	21	18	31	8	38	50	10	6.6	0.092
GLN-040	**PD 40845**	40	53	36	12	28	24	22	35	10	41	53	11	6.6	0.131
GLN-050	**PD 40846**	50	61	45	12	32	33	30	45	12	50	64	13	9	0.193
GLN-063	**PD 40847**	63	71	50	16	40	37	35	50	12	52	66	15	9	0.305
GLN-080	**PD 40848**	80	91	60	16	50	47	40	60	14	66	84	15	11	0.460
GLN-100	**PD 40849**	100	111	70	20	60	55	50	70	15	76	94	19	11	0.840

Pivot for Mounting B for Cylinder Diameter Ø32-100 mm

for 90° rotation

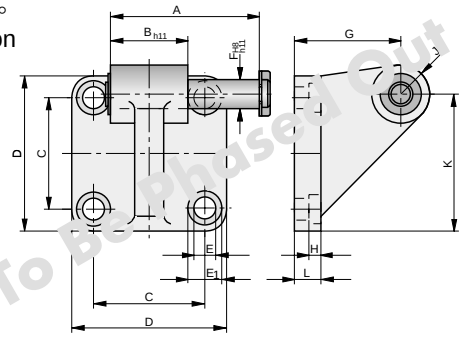

Material: cast iron, passivated

Pivot for Mounting B for Cylinder Diameter Ø125 mm toCETOP RP 107 P

for 90°rotation

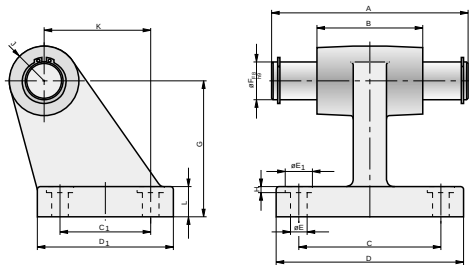

Material: nodular graphite cast iron

Order Instructions, Dimension Table (mm), Weight

Order Instructions Type	Order No.	for Cyl.Ø	A	B_{h11}	C	D	Ø E	Ø E_1	ØF H 8 h 11	G	H	J	K	L	Weight (kg)
GL-032	**PD 25621**	32	46	26	32.5	46	7	12	10	32	5	10	39	10	0.21
GL-040	**PD 25622**	40	53	28	38	52	7	12	12	36	5	12	43.5	10	0.315
GL-050	**PD 25623**	50	61	32	46.5	64	9	14	12	45	5	12	56.5	11	0.49
GL-063	**PD 25624**	63	71	40	56.5	74	9	14	16	50	5	16	64	11	0.82
GL-080	**PD 25625**	80	91	50	72	94	11	17	16	63	6.5	16	86	14	1.45
GL-100	**PD 25626**	100	111	60	89	113	11	17	20	73	6.5	20	102.5	16	2.60

Order Instructions Type	Order No.	for Cyl.Ø	A	B	C	C_1	D	D_1	Ø E	Ø E_1	ØF F 8 h 9	G	H_{max}	J	K	L	Weight (kg)
GLN-125	**PD 24027**	125	130	70	94	60	124	90	11	18	25	90	4	23	70	20	3.00

To Be Phased Out

Compensating Coupling for Piston Rods

Material: steel

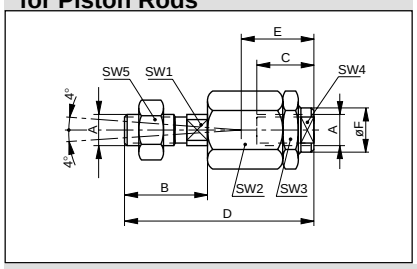

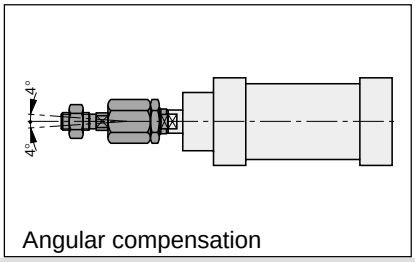

Angular compensation

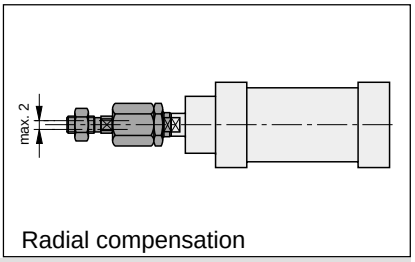

Radial compensation

Order Instructions, Dimension Table (mm), Weight

Order Instructions Type	Order No.	A	B	C	D	E	Ø F	SW1	SW2	SW3	SW4	SW5	Weight (kg)
AK-M10x1,25	**KY 1129**	M10x1,25	20	23	70	31	21,5	12	30	30	19	17	0,218
AK-M12x1,25	**KY 1131**	M12x1,25	23	23	67	31	21,5	12	30	30	19	19	0,207
AK-M16x1,5	**KY 1133**	M16x1,5	40	32	112	45	33,5	19	41	41	30	30	0,637
AK-M20x1,5	**KY 1134**	M20x1,5	40	42	122	56	33,.5	19	41	41	30	30	0,711
AK-M24x2	**KC5035**	M24x2	48	48	147	51	39	22	55	55	32	36	1,65
AK-M27x2	**KY 5036**	M27x2	48	48	147	51	39	24	55	55	32	41	1,66

Piston Rod Clevis to CETOP RP 102 P

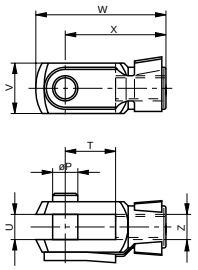

Material: galvanized steel

Order Instructions, Dimension Table (mm), Weight

Order Instructions Type	Order No.	for Cyl.-Ø	Ø P	T	U	V	W	X	Z	Weight (kg)
GK-M10x1,25	**KY 6135**	32	10	20	10	20	52	40	M10x1.25	0.08
GK-M12x1,25	**KY 6136**	40	12	24	12	24	62	48	M12x1.25	0.125
GK-M16x1,5	**KY 6139**	50, 63	16	32	16	32	83	64	M16x1.5	0.30
GK-M20x1,5	**KY 6141**	80, 100	20	40	20	40	105	80	M20x1.5	0.52
GKN-M24x2	**KY 6142**	125	25	50	25	50	132 max.	100	M24x2	1.08
GKN-M27x2	**KY 6866**	125	30	54	30	55	148 max.	112	M27x2	1.50

Piston Rod Eye to CETOP RP 103 P

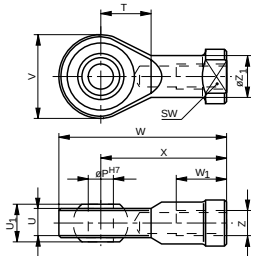

Material: galvanized steel

Order Instructions, Dimension Table (mm), Weight

Order Instructions Type	Order No.	for Cyl.-Ø	ØP H7	T	U	U_1	V	W	W_1	X	Z	Ø Z_1	SW	Weight (kg)
GA-M10x1,25	**KY 6147**	32	10	15	10,5	14	28	57	20	43	M10x1.25	15	17	0.072
GA-M12x1,25	**KY 6148**	40	12	17	12	16	32	66	22	50	M12x1.25	17.5	19	0.107
GA-M16x1,5	**KY 6150**	50, 63	16	22	15	21	42	85	28	64	M16x1.5	22	22	0.21
GA-M20x1,5	**KY 6151**	80, 100	20	26	18	25	50	102	33	77	M20x1.5	27.5	32	0.38
GAN-M 24x2	**KY 6152**	125	25	31	22	31	60 [1])	124 [1])	42 [2])	94	M24x2	33.5	36	0.65
GAN-M 27x2	**KY 6862**	125	30	36	25	37	70 [1])	145 [1])	51 [2])	110	M27x2	40	41	1.00

[1]) Maximum Dimension
[2]) Minimum Dimension

Order Instructions

Basic Cylinder (Without Mounting)

Series	Symbol	Piston-Ø	Order Instructions Type	Order No.
For contactless position sensing Double acting with adjustable end cushioning in one direction Reverse stroke blocked	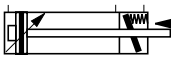 DZB	32	**DZB 5032/....**	**PD 29546-....**
		40	**DZB 5040/....**	**PD 29547-....**
		50	**DZB 5050/....**	**PD 29548-....**
		63	**DZB 5063/....**	**PD 27063-....**
		80	**DZB 5080/....**	**PD 27064-....**
		100	**DZB 5100/....**	**PD 22605-....**
		125*	**DZB 5125/....**	**PD 26273-....**
		125**	**DZB 5125/....**	**PD 27066-....**
For contactless position sensing Double acting with adjustable end cushioning in one direction Forward stroke blocked	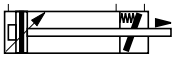 DZBA	32	**DZBA 5032/....**	**PD 29549-....**
		40	**DZBA 5040/....**	**PD 29550-....**
		50	**DZBA 5050/....**	**PD 29551-....**
		63	**DZBA 5063/....**	**PD 27059-....**
		80	**DZBA 5080/....**	**PD 27060-....**
		100	**DZBA 5100/....**	**PD 27061-....**
		125*	**DZBA 5125/....**	**PD 26243-....**
		125**	**DZBA 5125/....**	**PD 26209-....**

Complete type designation and order no. with stroke length in mm (4 digits)

Standard stroke lengths: 0025, 0050, 0080, 0100, 0125, 0160, 0200, 0320, 0400, 0500

Cylinder with Mounting EN

Series	Symbol	Piston-Ø	Order Instructions Type	Order No.
Double acting with adjustable end cushioning in one direction, reverse stroke blocked	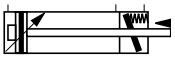 DZB	125*	**DZB 5125 EN-..../...**	**PD 29578-..../...**
		125**	**DZB 5125 EN-..../...**	**PD 29579-..../...**
Double acting with adjustable end cushioning in one direction, forward stroke blocked	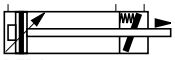 DZBA	125*	**DZBA 5125 EN-..../...**	**PD 29580-..../...**
		125**	**DZBA 5125 EN-..../...**	**PD 29581-..../...**

Complete type designation and order no. with stroke length in mm (4 digits)

Add exact A7 dimension in mm (3 digits)

* Piston rod thread = M 27x2 = ISO
** Piston rod thread = M 24x2 = CETOP

Cylinder Mountings

Description	Order No. Ø32	Ø40	Ø50	Ø63	Ø80	Ø100	Ø125
Swivel mounting B-	**PD 22704**	**PD 22705**	**PD 22706**	**PD 22707**	**PD 22708**	**PD 22709**	**PD 22034**
Rear trunnion mounting BA-..	**PD 23412**	**PD 23413**	**PD 23414**	**PD 23415**	**PD 23416**	**PD 23417**	**PD 23418**
Rear trunnion mounting with spherical bearing BAS-..	**PD 23843**	**PD 23844**	**PD 23845**	**PD 23846**	**PD 23847**	**PD 23848**	**PD 23849**
Rear flange mounting D-..	**PD 23403**	**PD 23404**	**PD 23405**	**PD 23406**	**PD 23407**	**PD 23408**	**PD 23409**
Centre trunniom mounting EN-..	**PD 24039**	**PD 24040**	**PD 24041**	**PD 24042**	**PD 24043**	**PD24044**	**-**

Delivery information: on delivery all cylinder mountings, except the centre trunnion mounting EN are not assembled.

Ordering Example:	**Basic Cylinder:**	**DZB 5063-0500**	**PD 27063-0500**
	Mounting:	**BAS-63**	**PD 23846**

For pivots for mountings B, EN see 2.90.002E-2.90.004E

Locking Unit

for Cylinders ø 32-125 mm

Version:
locks if pressure drops
- **Unit with cylinder**
- **Unit without cylinder**

Series
AZ50../...-FSE
DZ5125/...FSE

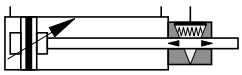

FSE ..

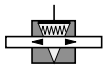

Characteristics to VDI 3294			Pressures quoted as gauge pressure						
Characteristic	Symbol	Unit	Comments						
General									
Description			Locking Unit						
Series			FSE- locks if pressure drops						
Mounting			See dimensional drawing						
Connection			Thread						
Ambient temperature range	ϑ_{max}	°C	+80	Note: for use below freezing point					
Medium temperature range	ϑ_{max}	°C	+80	(0°C) please consult us					
Weight (mass)		kg	See table						
Installation position			Optional						
Medium			Filtered, lubricated or non-lubricated compressed air						
Lubrication			Oil mist lubrication compatible with Perbunan						
Material – Cartridge			Al						
Material – Housing			Al						
Material – Clamping Jaw			Ms						
Material – Cyl. piston rod			Stainless steel						
Pneumatic Characteristics									
Nominal pressure	p_n	bar	6						
Cylinder operating pressure	p_{min} p_{max}	bar bar	See Data Sheets 2.29.001E, 2.30.050E						
FSE unlocking pressure		bar	≥4 - 10						
Locking force, static		N	600	1000	1500	2200	3000	5000	7000
Cylinder diameter		mm	32	40	50	63	80	100	125
Connection size			G1/8	G1/4	G1/4	G3/8	G3/8	G1/2	G1/2
Pilot air connection			M5	M5	G1/8	G1/8	G1/8	G1/8	G1/8
Piston rod diameter		mm	12	16	20	20	25	25	32

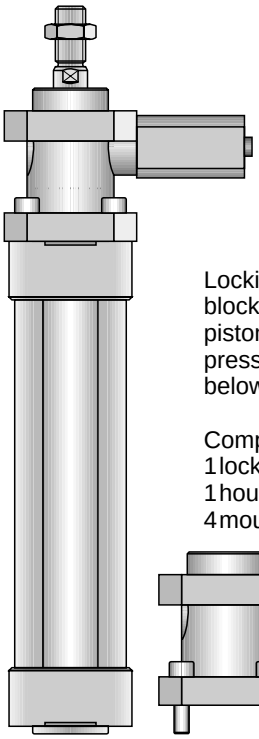

Locking unit to block the cylinder piston rod if pressure drops below 4 bar

Comprises:
1 locking cartridge
1 housing
4 mounting screws

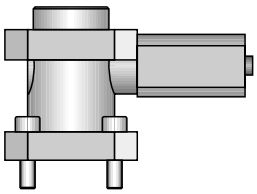

Weight (mass) kg							
Description	Cylinder diameter (mm) 32	40	50	63	80	100	125
Locking unit	0,60	0,80	1,00	1,20	1,40	1,60	1,80
Basic cylinder with 100 mm stroke and longer piston rod	0,70	1,20	1,75	2,32	3,75	4,90	7,87

For cylinders, see 2.29.001E and 2.30.050E
For product group overview, see 2.01.001E

Data Sheet No. 2.75.003E-1

A1P514E00JX00X

Technical modifications reserved

HOERBIGER ORIGA

Function

If the pressure drops the piston rod is locked by two tilting plates.
When the piston (1) is put under pressure it is pushed downwards, pressing the two tilting plates (3) and (4) together. The piston rod is then free to move.
If the pressure drops in piston chamber (5), a spring pushes the two plates (3) and (4) apart, so that the wedge effect pushes the piston (1) upwards and the tilting plates lock the piston rod.

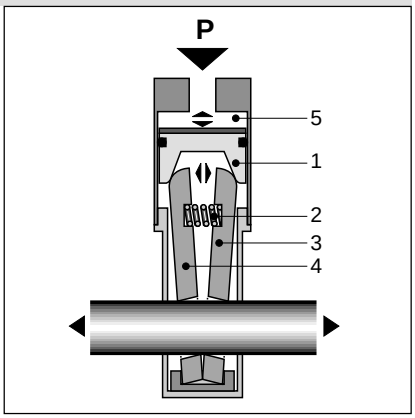

Important

- The locking unit can only be mounted on the cylinder if it is held in its unlocked position either by air pressure or by a suitable screw.
- When the cylinder piston rod is locked it must not be rotated or subjected to external force.

Circuit Diagrams for a Cylinder with the FSE Locking Unit

Example 1: Horizontal Application with 5/3 Way Valve - RFB

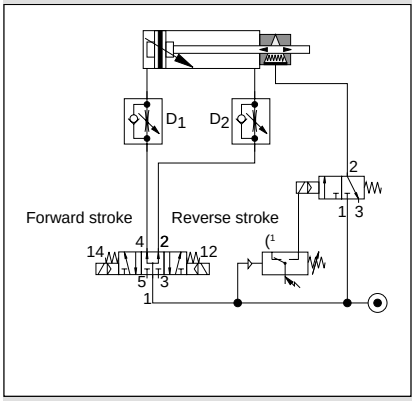

Example 2: Horizontal Application with 5/3 Way Valve - RFE

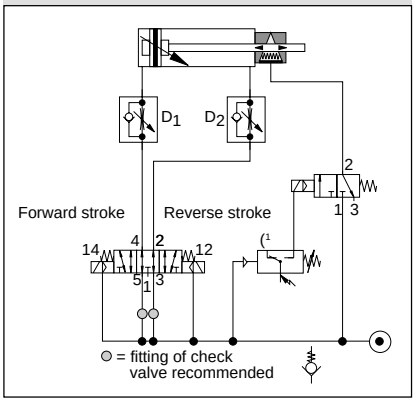

Examples 1 and 2:
When operating pressure is applied the P/E converter is closed and the 3/2 way valve is on through-flow, i.e. the locking unit is unlocked (working position).
The locking unit is actuated with a 3/2 way solenoid valve via a pressure switch, whereby if the pressure drops, the pressure switch reacts and the locking unit exhausts via the 3/2 way valve so that the piston rod is locked.
The use of the 5/3 way valve ensures that both sides of the cylinder piston are under pressure, so that the piston rod remains wherever it stops. This "standstill" however is only enough for the function of the FSE locking unit: without the FSE, the piston rod

Example 3: Horizontal Application with Two 3/2 Way Valves

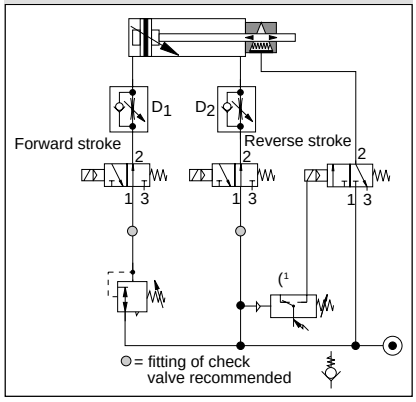

would continue its forward stroke because of the different piston areas.
After the pressure is equalized on both sides of the cylinder piston the locking unit can be actuated and the piston rod locked. The sequence of operations must therefore be correct: the two throttle/check valves D1 and D2 only control piston speed and have no influence on the actuation of the locking unit.
The fitting of a check valve increases safety because it prevents any movement of the piston before the FSE locks.

The difference between control examples 1 to 3 and 4 to 5 is that in example 2 an additonal regulator can be fitted before port 5 to compensate for the effect of the different areas of the two sides of the piston (see also example 3).

Example 3:
In contrast to examples 1 and 2, here the 5/3 way valve is replaced by two 3/2 way valves, but it is similar to the control solution in example 2.
The choice will depend on the customer.

Example 4: Vertical Application with 5/3 Way Valve - RFE

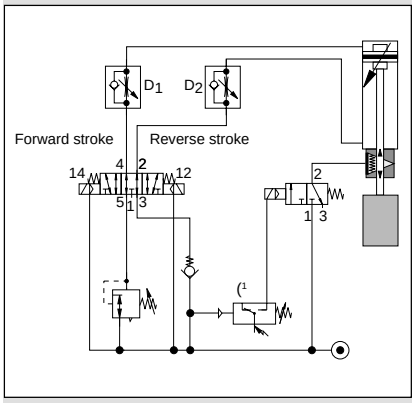

Example 5: Vertical Applications with two 3/2 way valves.

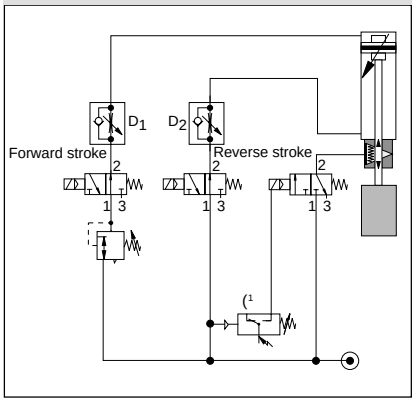

Examples 4 and 5:
These two examples are basically similar to example 2 but they are designed for a load acting downwards. A regulator on port 5 of the 5/3 way valve or on port 1 of the 3/2 way valve connected to the top end of the cylinder equalizes the forces resulting from the difference in piston areas and the load acting downwards.

(1 **Note:**
without P/E converter: only if the pressure drops
with P/E converter: if the pressure drops or the power fails.

Dimensions of Locking Unit FSE-...

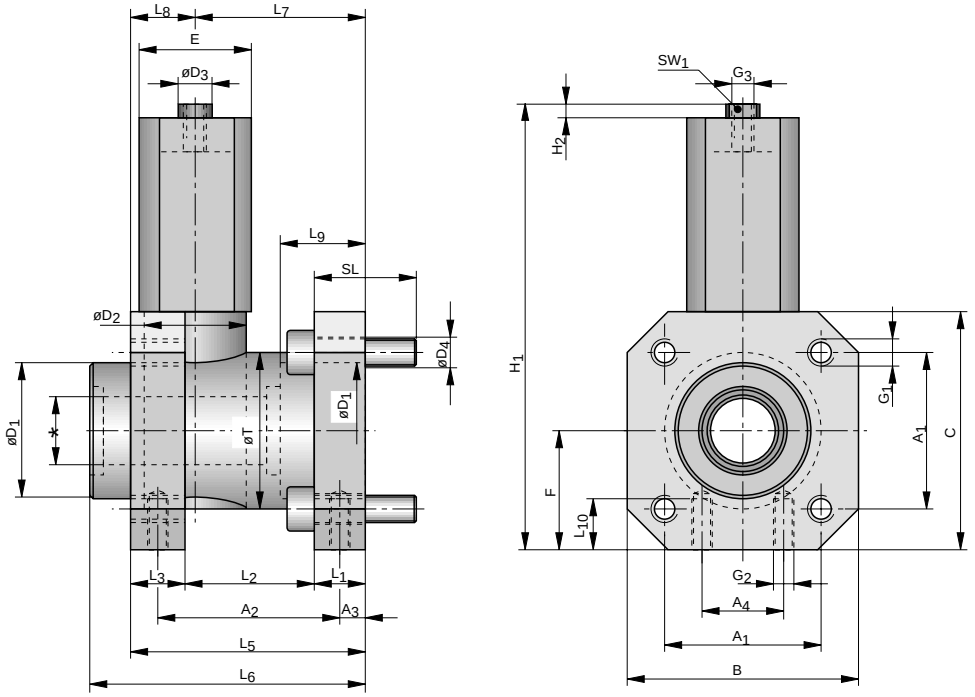

* Piston rod diameter

Dimensions of Cylinder with Locking Unit FSE-...

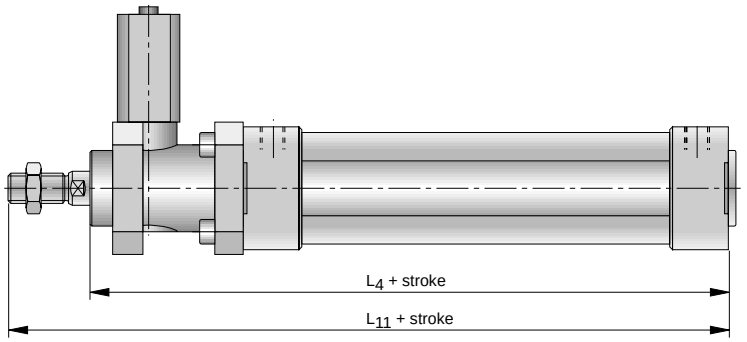

For all other dimensions for cylinders and cylinder mountings see Data Sheets 2.29.001E-1 to 6 and 2.30.050E-1 to 6

Dimensions Table (mm) for Locking Unit FSE-... and Dimensions including Cylinder

Cyl. ø	A_1	A_2	A_3	A_4	B	C	øD_1	øD_2	øD_3	øD_4	E	F	G_1	G_2	G_3
32	32,5	40	4,2	16	48	50	30	20	10	6,6	22,7	25	M6	M5	M5
40	38	46	4,5	21	56	58	35	24	10	6,6	27,7	29	M6	M5	M5
50	46,5	54	11,5	24	68	70	40	30	15	8,5	32,7	35	M8	M6	G1/8
63	56,5	55	7,5	32	82	85	45	38	15	8,5	41	42,5	M8	M8	G1/8
80	72	70	10	44	100	105	45	40	19	11	49,7	52,5	M10	M8	G1/8
100	89	70	10	60	120	130	55	48	19	11	54,7	65	M10	M8	G1/8
125	110	95	11	75	140	150	60	65	19	13	64,9	75	M12	M10	G1/8

Cyl. ø	H_1	H_2	L_1	L_2	L_3	L_4 + Hub	L_5	L_6	L_7	L_8	L_9	L_{10}	L_{11} + Hub	SL	SW1	øT
32	96	4	8	28	12	142	48	58	32	16	20,5	8	183	20	8	34
40	101	4	10	33	12	160	55	65	35,5	19,5	22,5	10	205	25	8	42
50	127	4	15	39	16	176	70	82	49	21	29,5	12	231	30	13	50
63	151,5	4	15	40	15	191	70	92	49	21	29,5	12	246	30	13	50
80	181,5	4	16	58	16	218	90	110	62	28	35,5	16	292	30	17	60
100	207	4	16	58	18	230	92	115	65	27	38,5	16	307	30	17	60
125	227	4	25	70	27	282	122	154	85	37	45,5	20	384	45	17	80

Ordering Details for Basic Cylinders (without Type of Mounting)

Descripiton	Symbol	Piston Ø	Ordering Details Type	Order No.
Double acting, with adjustable end cushioning, for contactless postion sensing	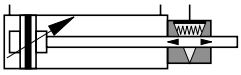	32	**AZ5032/....-FSE**	**PA 58347-....**
		40	**AZ5040/....-FSE**	**PA 59267-....**
		50	**AZ5050/....-FSE**	**PA 60347-....**
		63	**AZ5063/....-FSE**	**PA 61287-....**
		80	**AZ5080/....-FSE**	**PA 62187-....**
		100	**AZ5100/....-FSE**	**PA 63087-....**
		125	**DZ 5125/....-FSE(M24x2)**	**PA 64017-...**
		125	**DZ 5125/....-FSE(M27x2)**	**PA 64027-...**

Add stroke length (mm, 4 digits)

Standard stroke lengths: 0025, 0050, 0080, 0100, 0125, 0160, 0200, 0250, 0320, 0400, 0500

Ordering Details for Locking Unit FSE-... (without Cylinder)

Descripiton	Symbol	For Cyl. Ø	Ordering Details Type	Order No.
Locking unit, locks if pressure drops	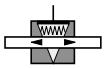	32	**FSE 032**	**KC 8227**
		40	**FSE 040**	**KC 8228**
		50	**FSE 050**	**KC 8229**
		63	**FSE 063**	**KC 8230**
		80	**FSE 080**	**KC 8231**
		100	**FSE 100**	**KC 8232**
		125	**FSE 125**	**KC 8233**

Linear Guide, U-Form,

for cylinders to ISO 6431/6432 ø8-100 mm

- **With plain bearings**

Series FEU....

FEUG.../... (with plain bearings)

Characteristics

Characteristics	Symbol	Unit	Description					
General Features								
Installation			In any position					
Temperature range	ϑ_{min} ϑ_{max}	°C °C	-20 +80					
Material								
Guide body			Aluminium, anodized					
Guide rods			Stainless steel					
Guide bushes			Sintered bronze					
Mounting plate			Aluminium, anodized					
Piston rod mounting			Stainless steel					
Weight (mass)		for cyl.	**ø8/10**		**ø12/16**		**20/25**	
With 100mm stroke		kg	0.20		0.38		0.68	
Per further 100mm stroke		kg	0.05		0.08		0.13	
Weight (mass)		for cyl.	**ø32**	**ø40**	**ø50**	**ø63**	**ø80**	**ø100**
With 100mm stroke		kg	1.32	1.98	3.35	4.60	8.30	10.85
Per further 100mm stroke		kg	0.18	0.32	0.50	0.50	0.77	0.77

Maximum working load in relation to overhang - FEUG version with plain bearings

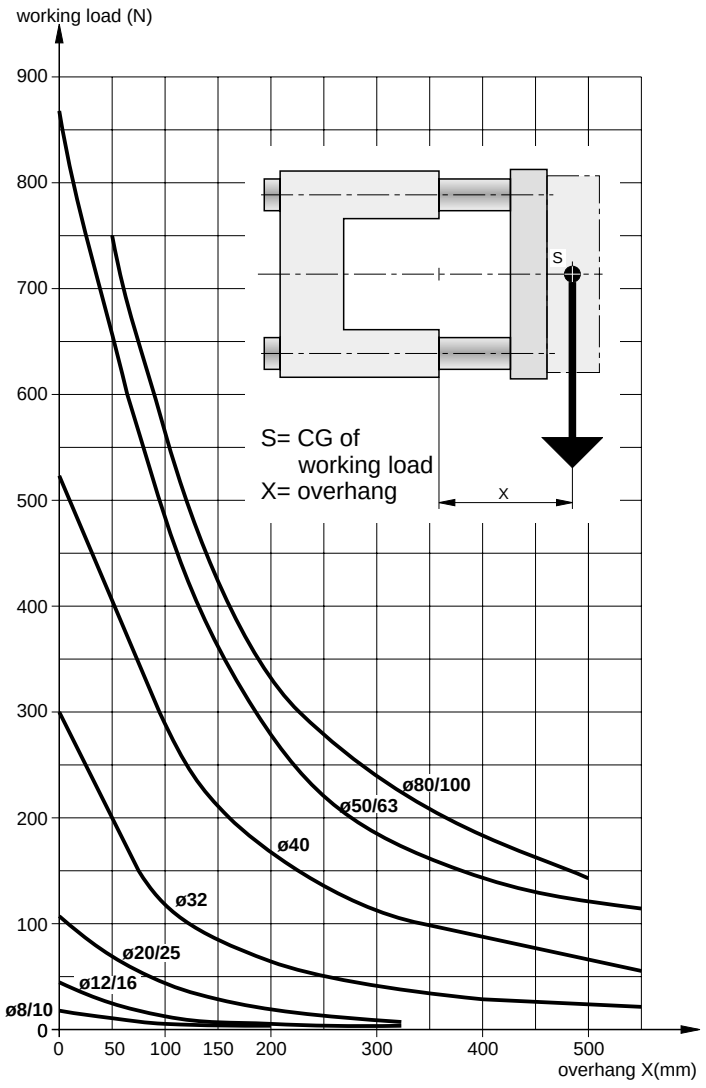

Supplied as follows:
ø8 - 25mm:
– 1 guide, 1 mounting nut for cylinders to ISO 6432
ø32 - 100mm:
– 1 guide, 4 mounting nuts for cylinders to ISO 6431

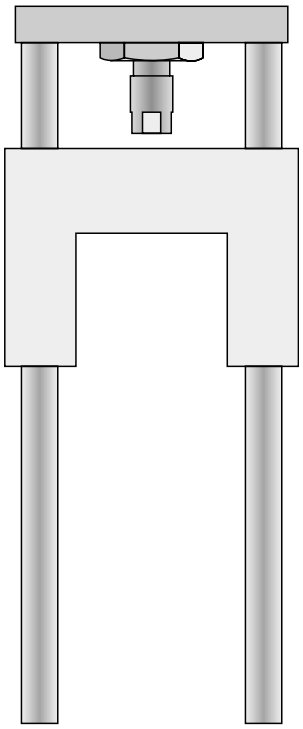

A1P480E00EY00X

The right to introduce technical modifications is reserved

HOERBIGER ORIGA

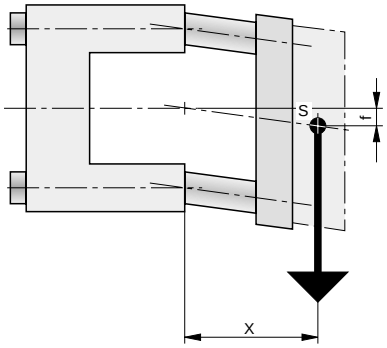

S = CG of working load
X = overhang
f = deflection

Deflection
- FEUG version with plain bearings

Diagram 1 - Deflection with a working load of 10N

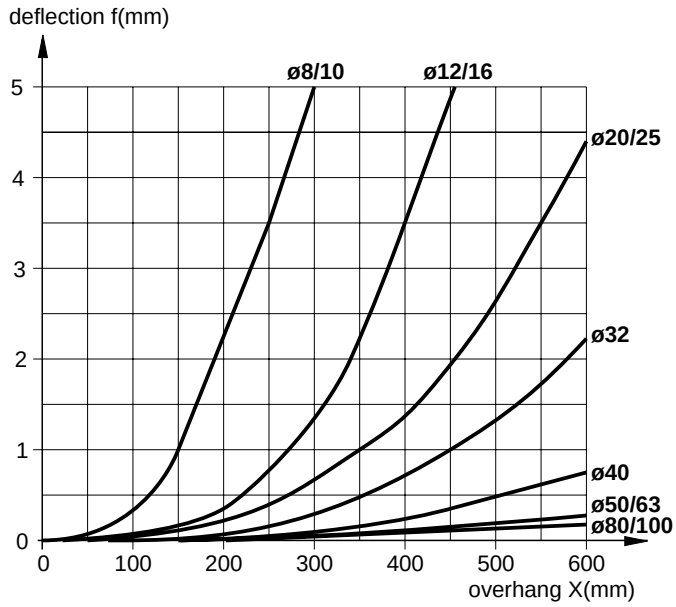

The total deflection is the sum of the deflection under own weight (Diagram 2) and the deflection under load (Diagram 1).
The deflection for every 10N load is shown in Diagram 1.

Diagram 2 - Deflection under own weight

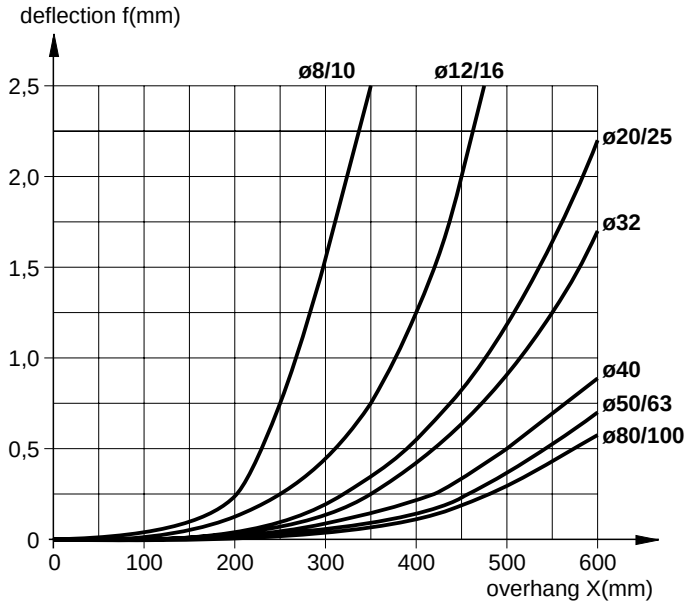

Dimensions of linear guides - for round cylinders ø8 - 25mm

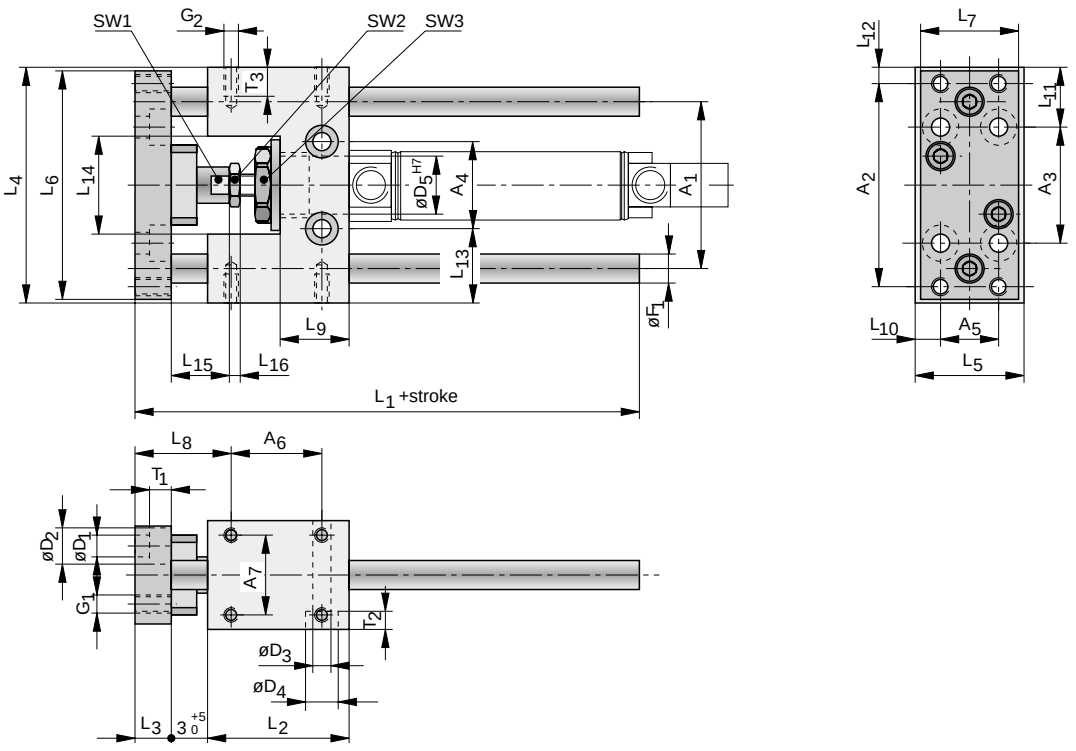

Dimensions table (mm) for linear guides - for round cylinders ø 8 - 25mm

Type	Cylinder diameter					
	8	10	12	16	20	25
A_1	40	40	46	46	58	58
A_2	44	44	54	54	68	68
A_3	25	25	32	32	40	40
A_4	24	24	24	24	38	38
A_5	16	16	16	16	20	20
A_6	19	19	25	25	32.5	32.5
A_7	19	19	22	22	23	23
$øD_1$	4.5	4.5	4.5	4.5	5,5	5.5
$øD_2$	7.5	7.5	8	8	10	10
$øD_3$	4.5	4.5	5.5	5.5	6.6	6.6
$øD_4$	-	-	-	-	11	11
$øD_5^{H7}$	12	12	16	16	22	22
$øF_1$	6	6	8	8	10	10
G_1	M4	M4	M4	M4	M5	M5
G_2	M4	M4	M4	M4	M6	M6
L_1+stroke	60	60	69	69	85	85
L_2	35	35	39	39	55	55
L_3	10	10	10	10	12	12
L_4	56	56	65	65	79	79
L_5	26	26	30	30	34	34
L_6	54	54	63	63	76	76
L_7	25	25	27	27	32	32
L_8	21^{+5}_{0}	21^{+5}_{0}	19.5^{+5}_{0}	19.5^{+5}_{0}	24^{+5}_{0}	24
L_9	17	17	19	19	25	25
L_{10}	5.5	5.5	7.5	7.5	7	7
L_{11}	16	16	16.5	16.5	19,5	19.5
L_{12}	6	6	5.5	5.5	5.5	5,5
L_{13}	16	16	20.5	20.5	20.5	20.5
L_{14}	24	24	27	27	37	37
L_{15}	19	19	16	16	29	23
L_{16}	2.2	2.2	3.2	3.2	4	6
SW1	9	9	9	9	13	13
SW2	a	a	a	a	a	a
SW3	15	15	19	19	27	27
T_1	4.6	4.6	4.6	4.6	5.7	5.7
T_2	-	-	-	-	-	7
T_3	8	8	8	8	14	14

Dimensions of linear guides - for standard cylinders ø32 - 100 mm

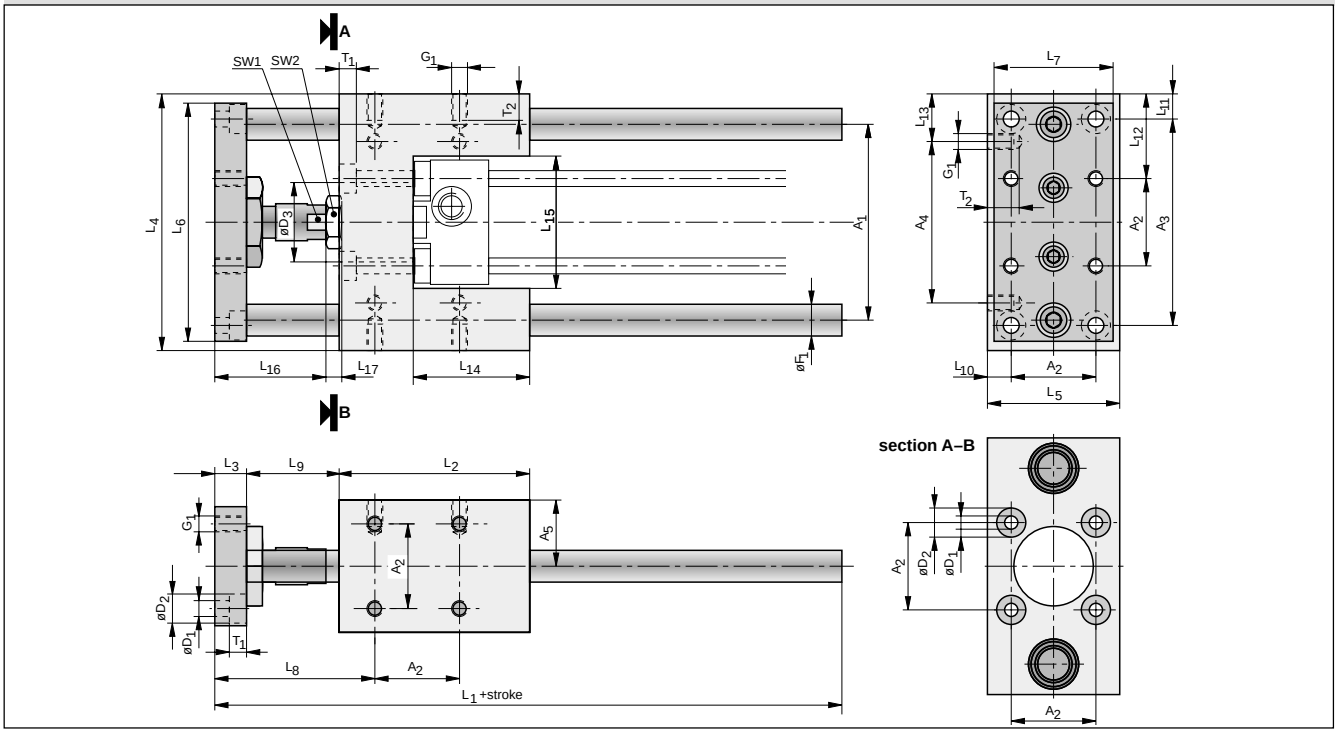

Dimensions table (mm) for linear guides - for standard cylinders ø32 - 100 mm

Type	Cylinder diameter					
	32	40	50	63	80	100
A_1	74	87	104	119	148	172
A_2	32,5	38	46,5	56,5	72	89
A_3	78	84	100	105	130	150
A_4	61	69	85	100	130	150
A_5	25	29	35	42,5	52,5	65
$øD_1$	6,6	6,6	9	9	11	11
$øD_2$	11	11	15	15	18	18
$øD_3$	30	35	40	45	45	55
$øF_1$	12	16	20	20	25	25
G_1	M6	M6	M8	M8	M10	M10
L_1+stroke	133	149	175	190	238	249
L_2	72	84	100	115	162	167
L_3	12	12	15	15	20	20
L_4	97	115	137	152	189	213
L_5	50	58	70	85	105	130
L_6	90	110	130	145	180	200
L_7	45	54	63	80	100	120
L_8	$60{,}5^{+5}_{0}$	$63{,}5^{+5}_{0}$	76^{+5}_{0}	76^{+5}_{0}	93^{+6}_{0}	$95{,}5^{+6}_{0}$
L_9	35^{+5}_{0}	41^{+5}_{0}	48^{+5}_{0}	48^{+5}_{0}	56^{+6}_{0}	56^{+6}_{0}
L_{10}	8,75	10,0	11,75	14,25	16,5	20,5
L_{11}	9,5	15,5	18,5	23,5	29,5	31,5
L_{12}	32,25	38,5	45,25	47,75	58,5	62
L_{13}	18	23	26	26	29,5	31,5
L_{14}	44	51	60	75	112	112
L_{15}	50,2	58,2	70,2	85,2	105,4	130,4
L_{16}	30	36	42	42	49	49
L_{17}	6	7	8	8	10	10
SW1	13	15	22	22	27	27
SW2	17	19	24	24	30	30
T_1	6,5	6,5	9	9	11	11
T_2	10	10	13	13	16	16

Order Instructions

For cyl.ø (mm)	Stroke (mm)	Order Instructions Type	Order No.
8, 10	25	**FEUG8-10/25**	**PD38013-0025**
	50	**FEUG8-10/50**	**PD38013-0050**
	100	**FEUG8-10/100**	**PD38013-0100**
12, 16	50	**FEUG12-16/50**	**PD38014-0050**
	100	**FEUG12-16/100**	**PD38014-0100**
	200	**FEUG12-16/200**	**PD38014-0200**
20	50	**FEUG20/50**	**PD38015-0050**
	100	**FEUG20/100**	**PD38015-0100**
	160	**FEUG20/160**	**PD38015-0160**
	200	**FEUG20/200**	**PD38015-0200**
	250	**FEUG20/250**	**PD38015-0250**
	400	**FEUG20/400**	**PD38015-0400**
25	50	**FEUG25/50**	**PD38016-0050**
	100	**FEUG25/100**	**PD38016-0100**
	160	**FEUG25/160**	**PD38016-0160**
	200	**FEUG25/200**	**PD38016-0200**
	250	**FEUG25/250**	**PD38016-0250**
	400	**FEUG25/400**	**PD38016-0400**
32	50	**FEUG32/50**	**PD38017-0050**
	100	**FEUG32/100**	**PD38017-0100**
	160	**FEUG32/160**	**PD38017-0160**
	200	**FEUG32/200**	**PD38017-0200**
	250	**FEUG32/250**	**PD38017-0250**
	320	**FEUG32/320**	**PD38017-0320**
40	50	**FEUG40/50**	**PD38018-0050**
	100	**FEUG40/100**	**PD38018-0100**
	160	**FEUG40/160**	**PD38018-0160**
	200	**FEUG40/200**	**PD38018-0200**
	250	**FEUG40/250**	**PD38018-0250**
	320	**FEUG40/320**	**PD38018-0320**
50	50	**FEUG50/50**	**PD38019-0050**
	100	**FEUG50/100**	**PD38019-0100**
	160	**FEUG50/160**	**PD38019-0160**
	200	**FEUG50/200**	**PD38019-0200**
	250	**FEUG50/250**	**PD38019-0250**
	320	**FEUG50/320**	**PD38019-0320**
63	50	**FEUG63/50**	**PD38020-0050**
	100	**FEUG63/100**	**PD38020-0100**
	160	**FEUG63/160**	**PD38020-0160**
	200	**FEUG63/200**	**PD38020-0200**
	250	**FEUG63/250**	**PD38020-0250**
	320	**FEUG63/320**	**PD38020-0320**
80	50	**FEUG80/50**	**PD38021-0050**
	100	**FEUG80/100**	**PD38021-0100**
	160	**FEUG80/160**	**PD38021-0160**
	200	**FEUG80/200**	**PD38021-0200**
	250	**FEUG80/250**	**PD38021-0250**
	320	**FEUG80/320**	**PD38021-0320**
100	50	**FEUG100/50**	**PD38022-0050**
	100	**FEUG100/100**	**PD38022-0100**
	160	**FEUG100/160**	**PD38022-0160**
	200	**FEUG100/200**	**PD38022-0200**
	250	**FEUG100/250**	**PD38022-0250**
	320	**FEUG100/320**	**PD38022-0320**

Linear Guide, H-Form,

for cylinders to ISO 6431 ø32-100 mm

- **With plain bearings**
- **With ball bearings**

Series FEH....

FEHG.../...
(with plain bearings)
FEHK.../...
(with ball bearings)

Characteristics

Characteristics	Symbol	Unit	Description					
General Features								
Installation			In any position					
Temperature range	ϑ_{min} ϑ_{max}	°C °C	-20 +80					
Material								
Guide body			Aluminium, anodized					
Guide rods			Stainless steel for FEHG version Steel, hardened for FEHK version					
Guide bushes			Sintered bronze for FEHG version Linear ball bearings for FEHK version					
Mounting plate			Aluminium, anodized					
Piston rod mounting			Stainless steel					
Weight (mass)		for cyl.	**ø32**	**ø40**	**ø50**	**ø63**	**ø80**	**ø100**
With 100mm stroke		kg	1.42	2.25	3.80	5.05	9.18	11.80
Per further 100mm stroke		kg	0.18	0.28	0.55	0.55	0.77	0.77

Maximum working load in relation to overhang
- FEHG version with plain bearings

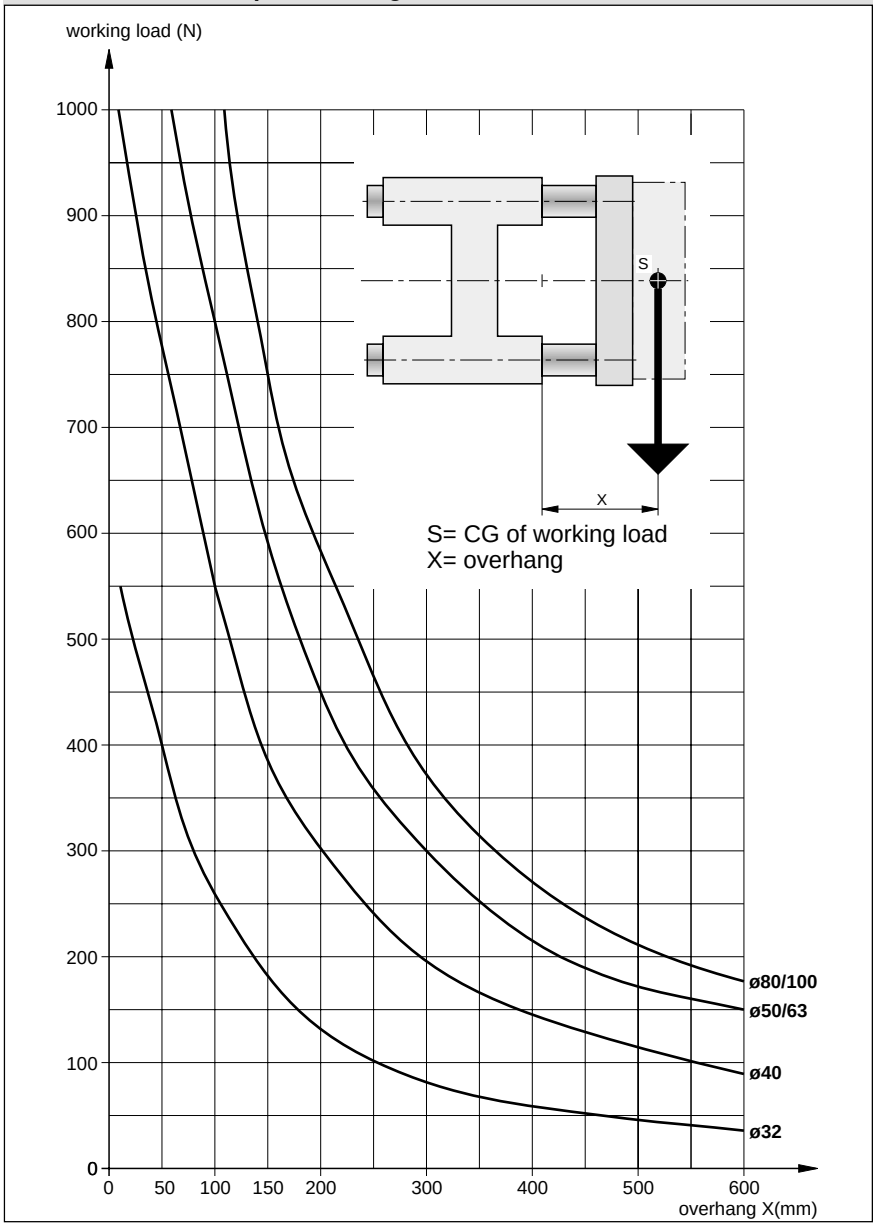

Supplied as follows:
ø32 - 100mm:
– 1 guide, 4 mounting nuts for cylinders to ISO 6431

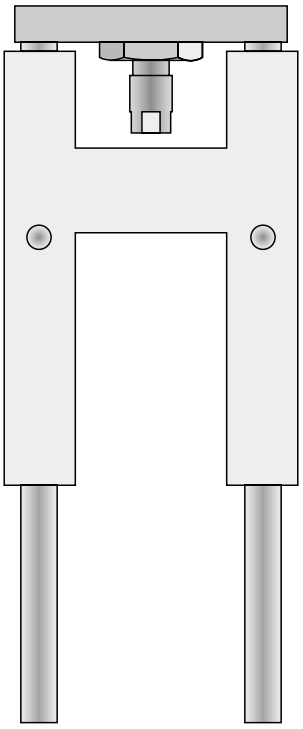

A1P479E00EY00X

The right to introduce technical modifications is reserved

HOERBIGER ORIGA

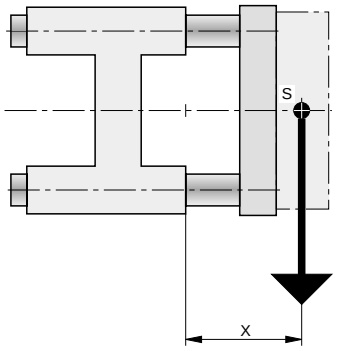

S = CG of working load
X = overhang

Maximum working load in relation to overhang
- FEHK version with ball bearings

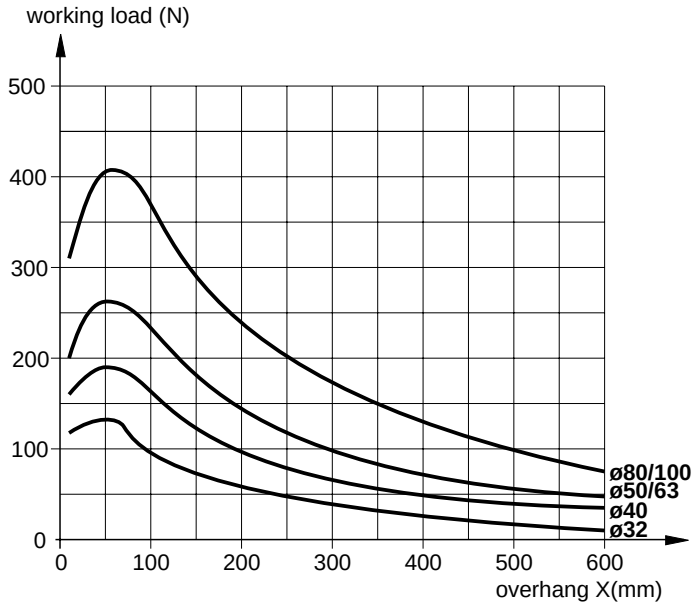

For short strokes, the working load figures obtained from the diagrams must be multiplied by a correction factor (k) (see Diagram).
In the working load curves for overhangs up to 60 mm these short stroke corrections are already included.
In the case of impact loads, the maximum permissible working load must be halved.

Reduction of working load with short strokes
- FEHK version with ball bearings

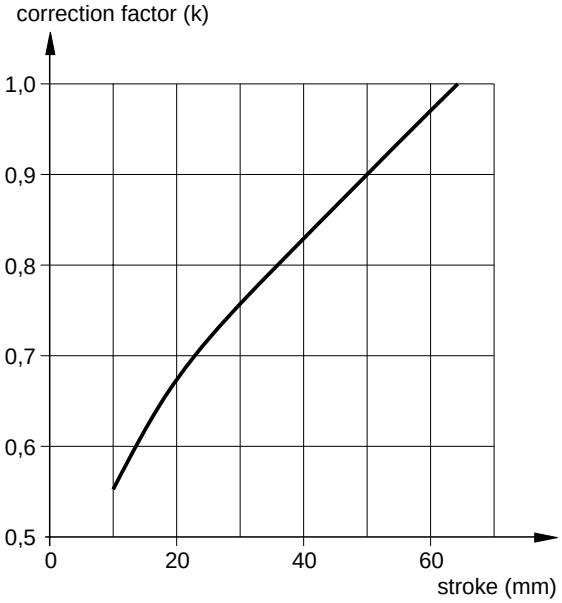

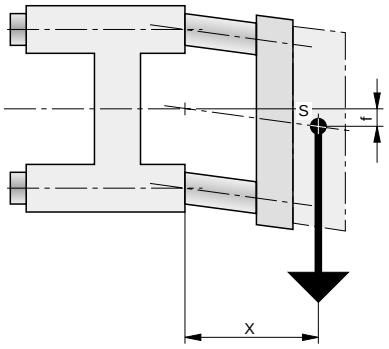

S = CG of working load
X = overhang
f = deflection

Deflection
- FEHG version with plain bearings and FEHK version with ball bearings

Diagram 1 - Deflection with a working load of 10N

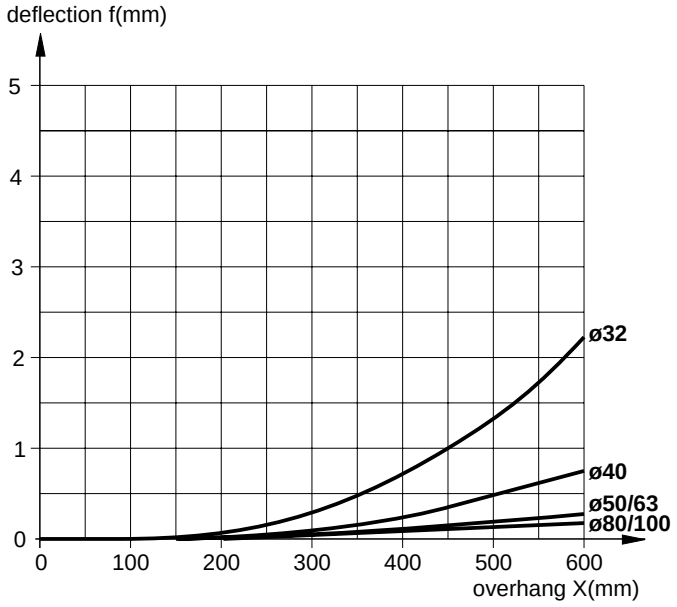

The total deflection is the sum of the deflection under own weight (Diagram 2) and the deflection under load (Diagram 1).
The deflection for every 10N load is shown in Diagram 1.

Diagram 2 - Deflection under own weight

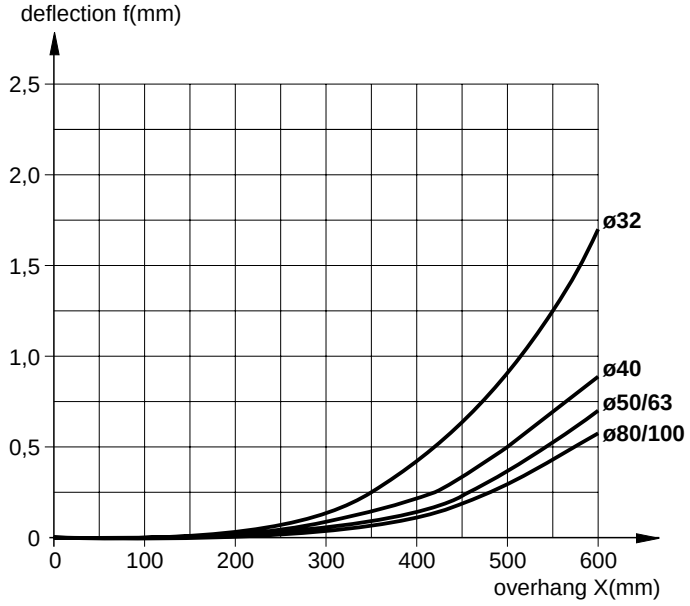

Dimensions

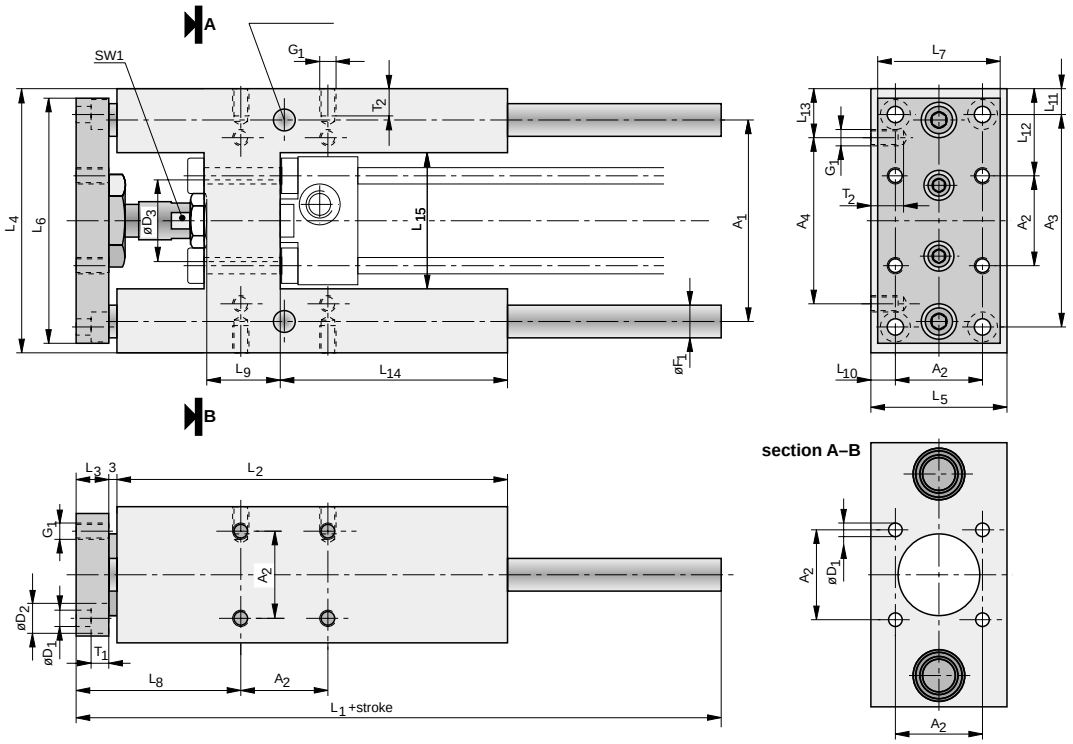

Dimension Table (mm)

Type	Cylinder diameter					
	32	40	50	63	80	100
A_1	74	87	104	119	148	172
A_2	32.5	38	46.5	56.5	72	89
A_3	78	84	100	105	130	150
A_4	61	69	85	100	130	150
$øD_1$	6.6	6.6	9	9	11	11
$øD_2$	11	11	15	15	18	18
$øD_3$	30	35	40	45	45	55
$øF_1$	14 (12)	18 (16)	22 (20)	22 (20)	25	25
G_1	M6	M6	M8	M8	M10	M10
L_1+stroke	177	192	237	237	280	280
L_2	125	140	150	182	215	220
L_3	12	12	15	15	20	20
L_4	97	115	137	152	189	213
L_5	50	58	70	85	105	130
L_6	90	110	130	145	180	200
L_7	45	54	63	80	100	120
L_8	59.70^{+5}_{0}	63^{+5}_{0}	70.2^{+10}_{0}	73.5^{+10}_{0}	89^{+10}_{0}	90.5^{+10}_{0}
L_9	28	33	40	40	50	50
L_{10}	8.75	10.0	11.75	14.25	16.5	20.5
L_{11}	9.5	15.5	18.5	23.5	29.5	31.5
L_{12}	32.25	38.5	45.25	47.75	58.5	62
L_{13}	18	23	26	26	29.5	31.5
L_{14}	65	69	65	97	112	112
L_{15}	50.5	58.5	70.5	85.5	105.4	130.4
SW1	13	15	22	22	27	27
SW2	–	–	–	–	30	30
T_1	6.5	6.5	9	9	11	11
T_2	10	10	13	13	16	16

Order Instructions

For cyl.ø (mm)	Stroke (mm)	Order instructions for plain bearing version Type	Order No.	Order instructions for ball bearing version Type	Order No.
32	50	**FEHG32/50**	**PD38001-0050**	**FEHK32/50**	**PD38007-0050**
	100	**FEHG32/100**	**PD38001-0100**	**FEHK32/100**	**PD38007-0100**
	160	**FEHG32/160**	**PD38001-0160**	**FEHK32/160**	**PD38007-0160**
	200	**FEHG32/200**	**PD38001-0200**	**FEHK32/200**	**PD38007-0200**
	250	**FEHG32/250**	**PD38001-0250**	**FEHK32/250**	**PD38008-0250**
	320	**FEHG32/320**	**PD38001-0320**	**FEHK32/320**	**PD38008-0320**
40	50	**FEHG40/50**	**PD38002-0050**	**FEHK40/50**	**PD38008-0050**
	100	**FEHG40/100**	**PD38002-0100**	**FEHK40/100**	**PD38008-0100**
	160	**FEHG40/160**	**PD38002-0160**	**FEHK40/160**	**PD38008-0160**
	200	**FEHG40/200**	**PD38002-0200**	**FEHK40/200**	**PD38008-0200**
	250	**FEHG40/250**	**PD38002-0250**	**FEHK40/250**	**PD38008-0250**
	320	**FEHG40/320**	**PD38002-0320**	**FEHK40/320**	**PD38008-0320**
50	50	**FEHG50/50**	**PD38003-0050**	**FEHK50/50**	**PD38009-0050**
	100	**FEHG50/100**	**PD38003-0100**	**FEHK50/100**	**PD38009-0100**
	160	**FEHG50/160**	**PD38003-0160**	**FEHK50/160**	**PD38009-0160**
	200	**FEHG50/200**	**PD38003-0200**	**FEHK50/200**	**PD38009-0200**
	250	**FEHG50/250**	**PD38003-0250**	**FEHK50/250**	**PD38009-0250**
	320	**FEHG50/320**	**PD38003-0320**	**FEHK50/320**	**PD38009-0320**
63	50	**FEHG63/50**	**PD38004-0050**	**FEHK63/50**	**PD38010-0050**
	100	**FEHG63/100**	**PD38004-0100**	**FEHK63/100**	**PD38010-0100**
	160	**FEHG63/160**	**PD38004-0160**	**FEHK63/160**	**PD38010-0160**
	200	**FEHG63/200**	**PD38004-0200**	**FEHK63/200**	**PD38010-0200**
	250	**FEHG63/250**	**PD38004-0250**	**FEHK63/250**	**PD38010-0250**
	320	**FEHG63/320**	**PD38004-0320**	**FEHK63/320**	**PD38010-0320**
80	50	**FEHG80/50**	**PD38005-0050**	**FEHK80/50**	**PD38011-0050**
	100	**FEHG80/100**	**PD38005-0100**	**FEHK80/100**	**PD38011-0100**
	160	**FEHG80/160**	**PD38005-0160**	**FEHK80/160**	**PD38011-0160**
	200	**FEHG80/200**	**PD38005-0200**	**FEHK80/200**	**PD38011-0200**
	250	**FEHG80/250**	**PD38005-0250**	**FEHK80/250**	**PD38011-0250**
	320	**FEHG80/320**	**PD38005-0320**	**FEHK80/320**	**PD38011-0320**
100	50	**FEHG100/50**	**PD38006-0050**	**FEHK100/50**	**PD38012-0050**
	100	**FEHG100/100**	**PD38006-0100**	**FEHK100/100**	**PD38012-0100**
	160	**FEHG100/160**	**PD38006-0160**	**FEHK100/160**	**PD38012-0160**
	200	**FEHG100/200**	**PD38006-0200**	**FEHK100/200**	**PD38012-0200**
	250	**FEHG100/250**	**PD38006-0250**	**FEHK100/250**	**PD38012-0250**
	320	**FEHG100/320**	**PD38006-0320**	**FEHK100/320**	**PD38012-0320**

PNEUMATIC
GROUP

BELLOWS CYLINDERS

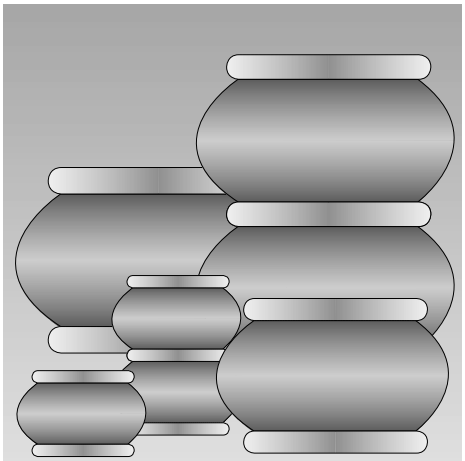

HOERBIGER
ORIGA

Bellows cylinders are single acting. They are made of neoprene rubber reinforced by 2 layers of nylon cord. The external diameter of the bellows is largest when the cylinder is compressed. When air is introduced, they cylinder extends and the bellows diameter decreases. The longer the stroke, the more the force decreases.

There are two basic types:
Single convolution: maximum stroke length 110 mm.
Double convolution: maximum stroke length 240 mm.

Standard delivery includes fitted end plates for the particular type.

Technical Notes

Force
The force available depends on the stroke length: see the force diagrams in the data sheets.

Maximum permissible length
Depends on the operating pressure and is shown in the force diagrams: it must not be exceeded, to avoid damage to the cylinder. The stroke must therefore be limited by an external stop.
See E max. in Fig. 1 below.

Minimum permissible length
Is shown in the dimension tables and must be observed: be sure to provide an external limit stop.
See E min. in Fig. 1 below.

Medium
Air, Water (with glycol additives) and brake fluid. (No hydraulic fluids)

Oil resistance
The amount of oil necessary for lubricating pneumatic systems and moderate external oil contamination are harmless.

Operating pressure range
Is 2-8 bar for the standard 2 ply cylinder.

Temperature range
-40 to 70 C.

Special versions
Are available on request, e.g. larger diameters, higher temperature ranges, open ended with mounting rings, etc..

Fig. 1

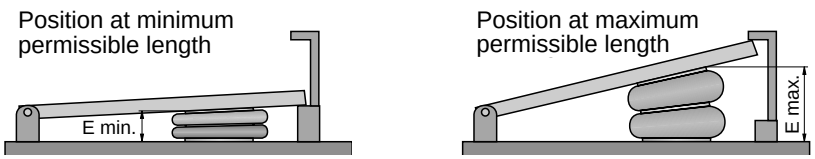

Maximum permissible pitch
The pitch of the end plates must not exceed 30°.
Minimum permissible length (E_{min}) and maximum permissible length (E_{max}) must be observed (see Fig. 1)

Fig. 2	Port size	**Type**	Force	Data Sheet No.
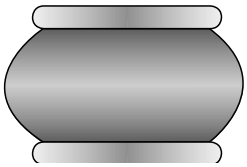	G1/4	**SP-1B04**	See force diagrams in data sheets	2.80.008E
	G1/4	**SP-1B05**		
	G1/4	**SP-1B07**		
	G3/4	**SP-1B12**		
	G3/4	**SP-1B22**		
	G3/4	**SP-1B34**		
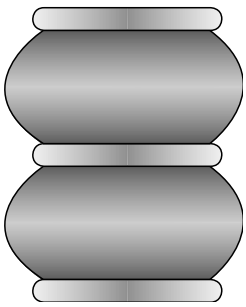	G1/4	**SP-2B04**		2.80.059E
	G1/4	**SP-2B05**		
	G1/4	**SP-2B05A**		
	G1/4	**SP-2B07**		
	G3/4	**SP-2B12**		
	G3/4	**SP-2B22**		
	G3/4	**SP-2B34**		

A3P031E71DX00X

The right to introduce technical modifications is reserved

HOERBIGER-ORIGA GmbH • Industriestr. 8 • D-70794 Filderstadt • Tel. +49 (0)7158 1703-0 • Fax +49 (0)7158 64870 • e-mail: dmarket@at.hoerbiger.com
HOERBIGER-ORIGA GmbH • Südliche Römerstraße 15 • D-86972 Altenstadt • Tel. +49 (0)8861 221-0 • Fax +49 (0)8861 221-1305 • e-mail: pneu@at.hoerbiger.com
HOERBIGER-ORIGA GmbH (Interface) • Diessener Straße 8 • D-86956 Schongau • Tel. +49 (0)8861 2301-0 • Fax +49 (0)8861 2301-10 • e-mail interface@at.hoerbiger.com
HOERBIGER-ORIGA Pneumatik GmbH • Dr. Alexander-Schärf-Straße 12 • A-2700 Wiener Neustadt • Tel. +43 (0)2622 26071-0 • Fax +43 (0)2622 26071-5 • e-mail: amarket@hoerbiger-origa.com
HOERBIGER-ORIGA Ltd. • Tewkesbury Industrial Estate • Tewkesbury GL 20 8 ND GB • Tel. +44 1684 85 00 00 • Fax +44 1684 85 05 55 • e-mail: sales@hoerbiger-origa.com
HOERBIGER-ORIGA AB • Kungsgatan 10, Box 67 • SE-73622 Kungsör • Tel. +46 227 411 00 • Fax +46 227 411 29 • e-mail: semarket@hoerbiger-origa.com
Internet www.hoerbiger-origa.com

Bellows Cylinder

Single convolution

Series SP-....

SP-1B..

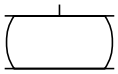

Characteristics

Characteristics	Symbol	Unit	Description	
System			Single acting	
Mounting			See drawing	
Tube connection			Thread	
Ambient temperature range	ϑ_{min} ϑ_{max}	°C °C	-40 +70	higher temperature ranges on request
Installation			Max. pitch of end plates 30°, max. deviation of axes to one another must be less than 10 mm. Both limits of stroke have to be limited by external stops. Return has to be effected by external force.	
Medium			Filtered and unlubricated compressed air	
Material			End plates of steel, galvanized and chromium anodized; Mounting rings of aluminium. Bellows-neoprene with nylon cord lining	
Operating pressure range	p_{max}	bar	8 (for cushioning duty = 7 bar)	

Stroke, Weight, Frequency

Type	Stroke max. (mm)	Weight (mass) (kg)	Frequency[1)] (Hz)
SP-1B04	55	0,85	3 (when E = 80)
SP-1B05	45	1,0	4 (when E = 75)
SP-1B07	90	2,1	2.8 (when E = 90)
SP-1B12	100	2,7	2.4 (when E = 100)
SP-1B22	110	4,5	2.1 (when E = 120)
SP-1B34	110	5,5	2.1 (when E = 120)

[1)] Nominal values at p_{max}

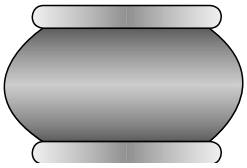

For product group list see 2.80.001E

Data Sheet No. 2.80.008E-1

A1P273E00JZ00X

The right to introduce technical modifications is reserved

HOERBIGER ORIGA

Force Diagrams

Type: SP-1B04, Stroke: max. 55 mm

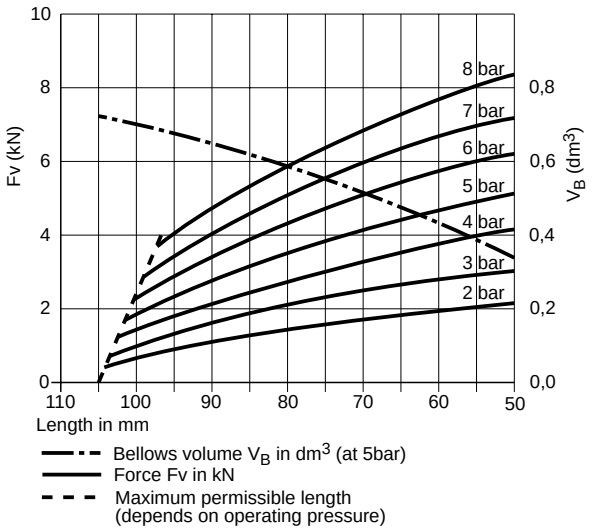

Type: SP-1B05, Stroke: max. 45 mm

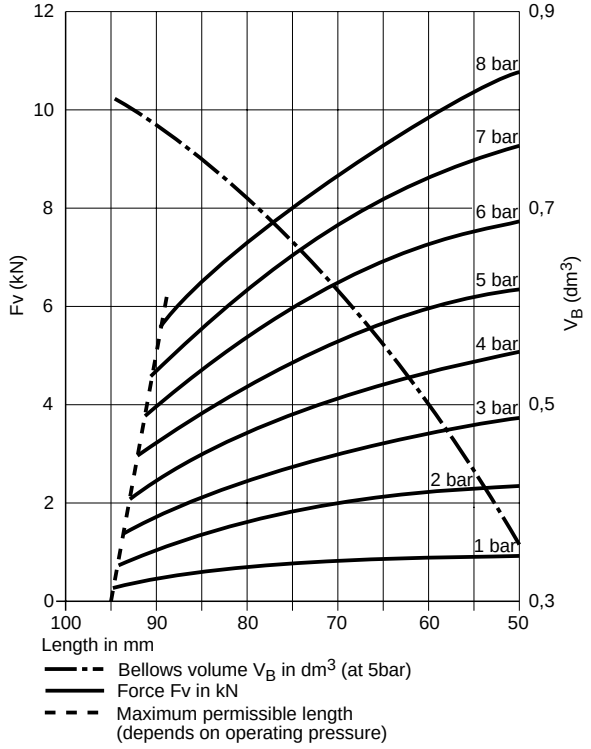

Type: SP-1B07, Stroke: max. 90 mm

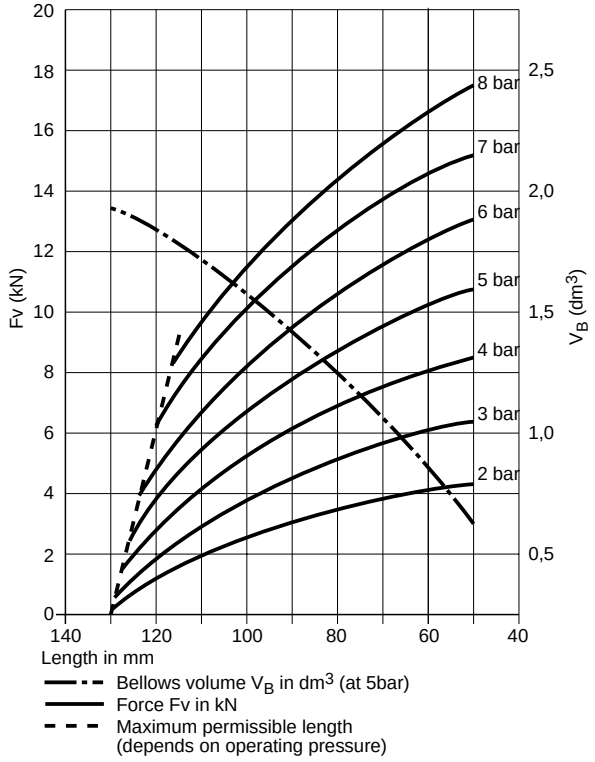

Type: SP-1B12, Stroke: max. 100 mm

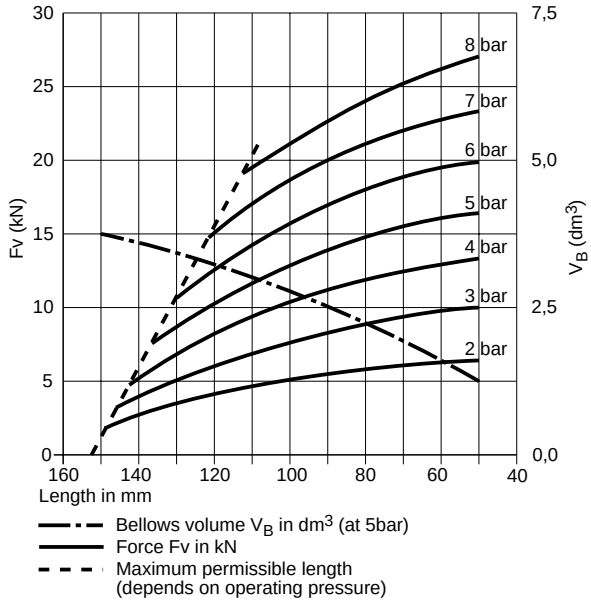

Type: SP-1B22, Stroke: max. 110 mm

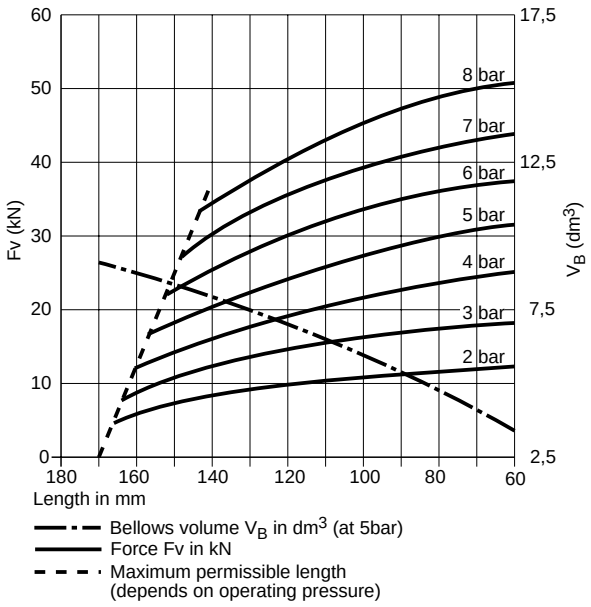

Type: SP-1B34, Stroke: max. 110 mm

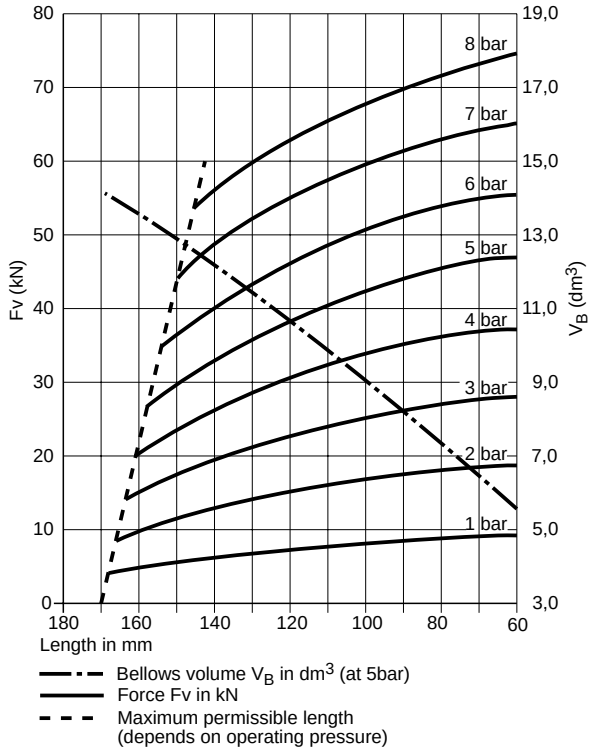

Dimensions

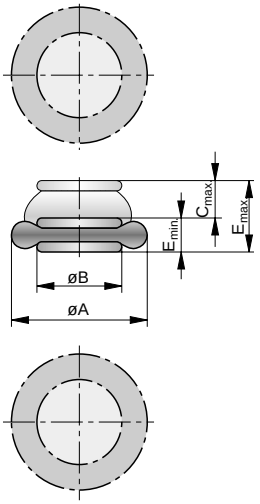

Dimensions of Mounting Plates

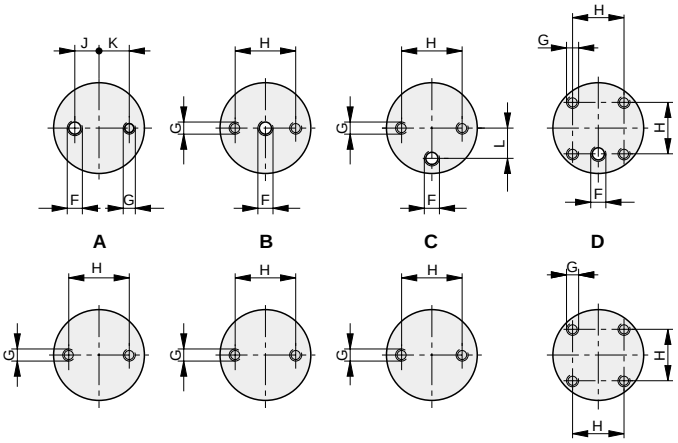

Order Instructions, Dimension Table (mm)

Order Instructions Type	Order No.	Mounting plate	at 8 bar ØA	ØB	C_{max}**	E_{max}**	E_{min}	F	G*	H	J	K	L
SP-1B04	**KY 9500**	A	150	88	55	105	50	G1/4	M8	22	9	11	-
SP-1B05	**KY 8401**	B	165	110	45	95	50	G1/4	M8	44.5	-	-	-
SP-1B07	**KY 9501**	C	205	135	80	130	50	G1/4	M8	54	-	-	27
SP-1B12	**KY 9502**	C	250	160	100	150	50	G3/4	M8	89	-	-	38
SP-1B22	**KY 9590**	C	350	229	110	170	60	G3/4	M12	157.5	-	-	73
SP-1B34	**KY 8010**	D	420	288	110	170	60	G3/4	M8	158.8	-	-	-

*15 deep

**These dimensions depend on the operating pressure: see force diagrams.

Bellows Cylinder

Double convolution

Series SP-....

SP-2B..

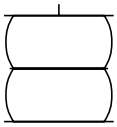

Characteristics

Characteristics	Symbol	Unit	Description
System			Single acting
Mounting			See drawing
Tube connection			Thread
Ambient temperature range	ϑ_{min} ϑ_{max}	°C °C	-40 +70 higher temperature ranges on request
Installation			Max. pitch of end plates 30°, max. deviation of axes to one another must be less than 10 mm. Both limits of stroke have to be limited by external stops. Return has to be effected by external force.
Medium			Filtered and unlubricated compressed air
Material			End plates of steel, galvanized and chromium anodized; Mounting rings of aluminium. Bellows - neoprene with nylon cord lining
Operating pressure range	p_{max}	bar	8 (for cushioning duty = 7 bar)

Stroke, Weight, Frequency

Type	Stroke max. (mm)	Weight (mass) (kg)	Frequency[1] (Hz)
SP-2B04	110	1.1	2.3 (when E = 80)
SP-2B05	80	1.2	2.5 (when E = 120)
SP-2B05A	105	1.25	2.3 (when E = 140)
SP-2B07	125	2.6	1.9 (when E = 160)
SP-2B12	150	3.5	1.8 (when E = 180)
SP-2B22	170	4.9	1.7 (when E = 190)
SP-2B34	170	6.8	1.7 (when E = 190)

[1] Nominal values at p_{max}

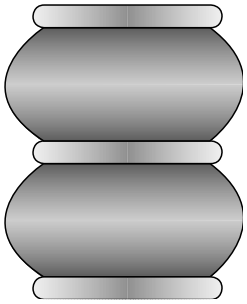

For product group list see 2.80.001E

A1P274E00DX00X

The right to introduce technical modifications is reserved

HOERBIGER ORIGA

Force Diagrams

Type: SP-2B04, Stroke: max. 110 mm

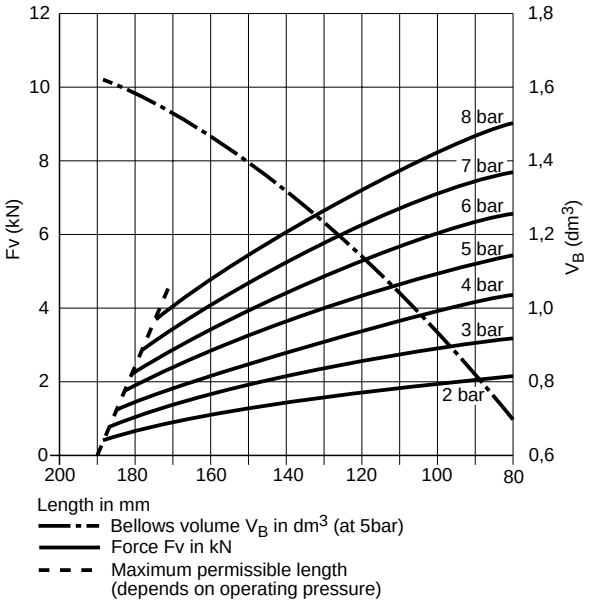

Type: SP-2B05, Stroke: max. 80 mm

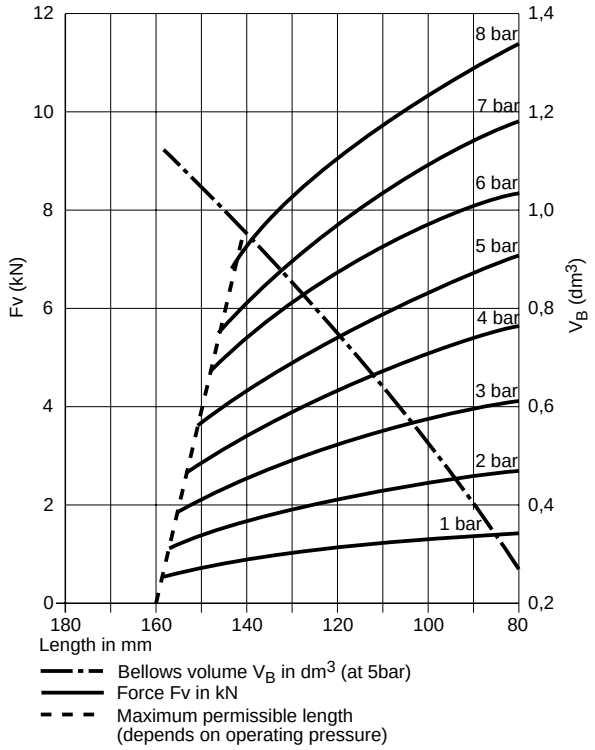

Type: SP-2B05A, Stroke: max. 105 mm

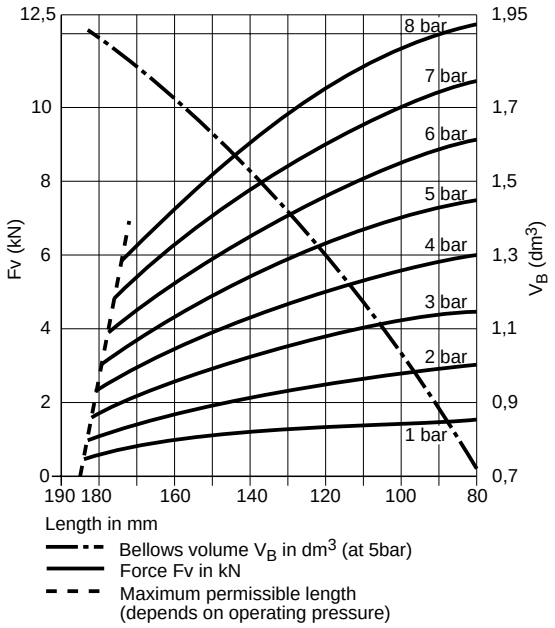

Type: SP-2B07, Stroke: max. 125 mm

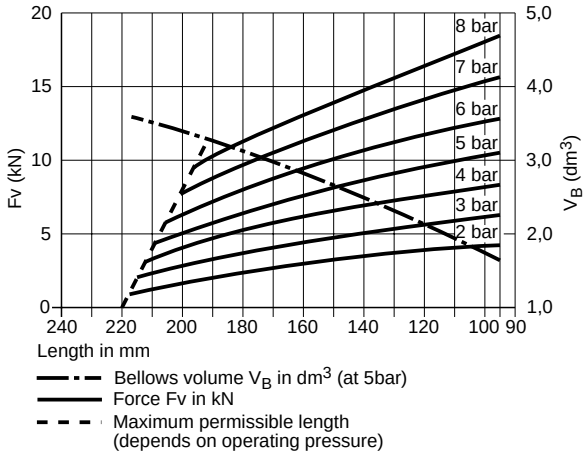

Force Diagrams

Type: SP-2B12, Stroke: max. 150 mm

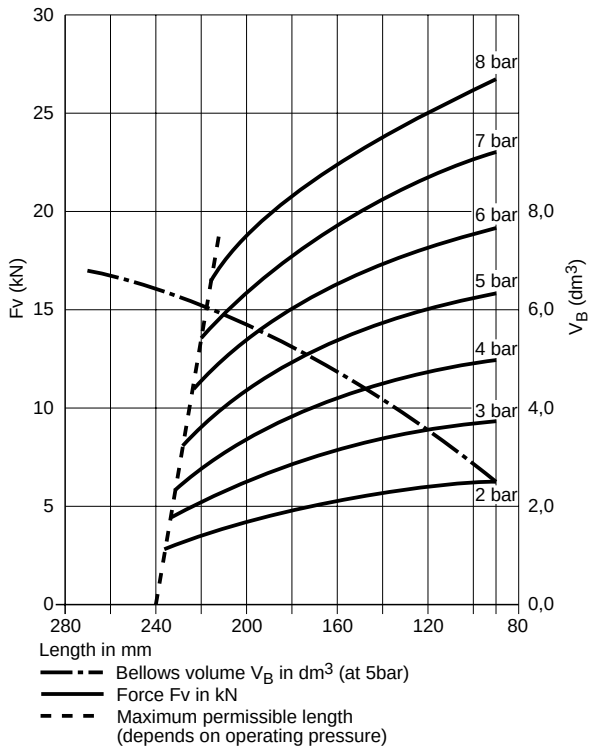

Type: SP-2B22, Stroke: max. 170 mm

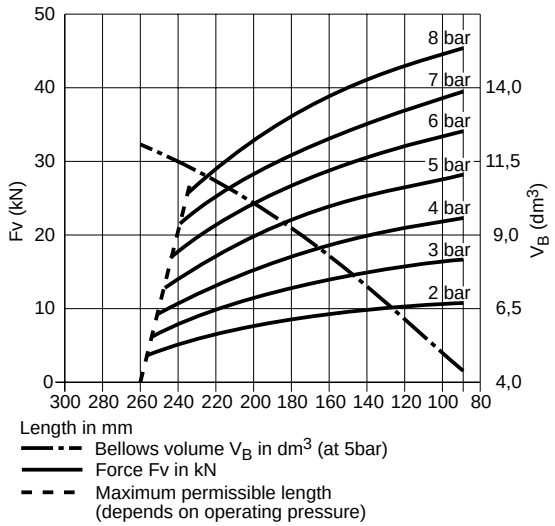

Type: SP-2B34, Stroke: max. 170 mm

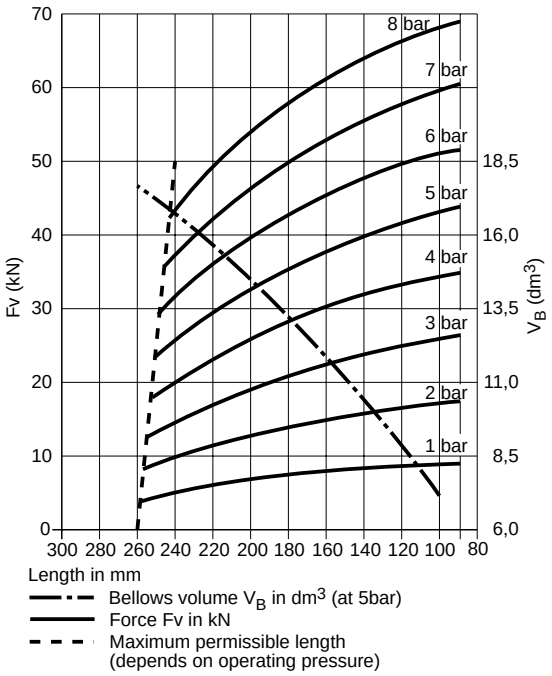

Dimensions

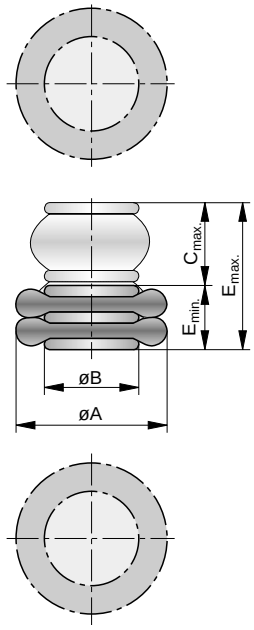

Dimensions of Mounting Plates

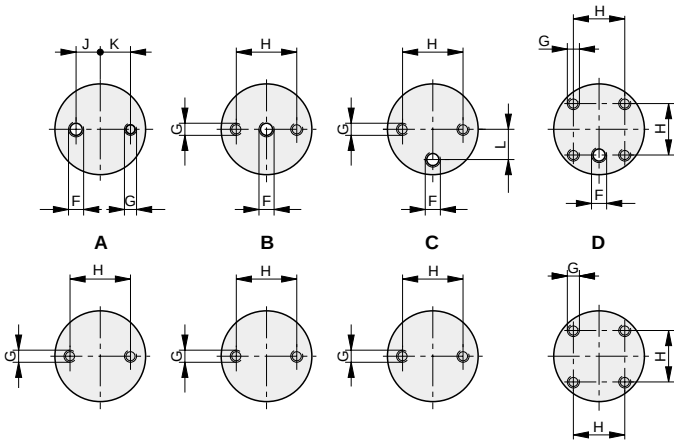

Order Instructions, Dimension Table (mm)

Order Instructions Type	Order No.	Mounting plate	at 8 bar ØA	ØB	C_{max}**	E_{max}**	E_{min}	F	G*	H	J	K	L
SP-2B04	**KY 9612**	A	165	82	110	190	80	G1/4	M8	22	9	11	-
SP-2B05	**KY 8011**	B	165	110	80	160	80	G1/4	M8	44.5	-	-	-
SP-2B05A	**KY 8012**	B	170	110	105	185	80	G1/4	M8	44.5	-	-	-
SP-2B07	**KY 9589**	C	215	135	125	220	95	G1/4	M8	54	-	-	27
SP-2B12	**KY 9611**	C	250	160	150	240	90	G3/4	M8	89	-	-	38
SP-2B22	**KY 9591**	C	320	229	170	260	90	G3/4	M12	157.5	-	-	73
SP-2B34	**KY 8007**	D	390	288	170	260	90	G3/4	M8	158.8	-	-	-

* 15 deep
** These dimensions depend on the operating pressure: see force diagrams.

Cylinder Accessories

Piston rod clevis to CETOP RP 102 P
Piston rod eyes to CETOP RF 103 P
for cylinder diameter 8-250 mm

Serie

GK.-.... (Piston rod clevis)
GA.-.... (Piston rod eyes)

Piston Rod Clevis to CETOP RP 102P for Cylinder Diameter 8-250 mm

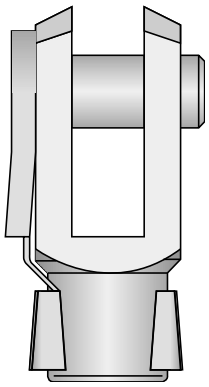

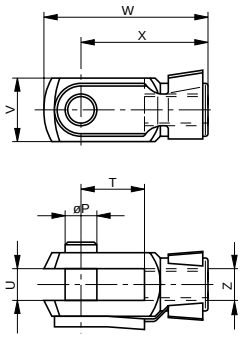

Material: galvanized steel

Dimension Table (mm)

for Cyl.-Ø	ØP	T	U	V	W	X	Z
8, 10	4	8	4	8	22	16	M4
12, 16	6	12	6	12	31	24	M6
20	8	16	8	16	42	32	M8
32	10	20	10	20	52	40	M10
25, 32	10	20	10	20	52	40	M10x1.25
40	12	24	12	24	62	48	M12
40	12	24	12	24	62	48	M12x1.25
50, 63	16	32	16	32	83	64	M16
50, 63	16	32	16	32	83	64	M16x1.5
80, 100	20	40	20	40	105	80	M20x1.5
125	25	50	25	50	132 max.	100	M24x2
125	30	54	30	55	148 max.	112	M27x2
160, 200	35	72	36	70	188 max.	144	M36x2
250	40	84	40	85	245 max.	168	M42x2

Assembly instructions:
When mounting the load avoid lateral forces on the piston rod.

Delivery includes:
Spherical clevis and hexagon nut.
From Ø 125 upward, the safety clamp and the pin held with two circlips are omitted.

Order Instructions and Weight

Order Instructions Type	Order No.	for Cyl.-Ø	Weight (mass) (kg)
GK-M4	**KZ 1413**	8, 10	0.008
GK-M8	**KY 6133**	20	0.016
GK-M10	**KY 6134**	32	0.08
GK-M10x1.25	**KY 6135**	25, 32	0.08
GK-M12	**KY 6138**	40	0.125
GK-M12x1.25	**KY 6136**	40	0.125
GK-M16	**KY 6140**	50, 63	0.3
GK-M16x1.5	**KY 6139**	50, 63	0.3
GK-M20x1.5	**KY 6141**	80, 100	0.52
GKN-M24x2	**KY 6142**	125	1.08
GKN-M27x2	**KY 6866**	125	1.5
GKN-M36x2	**KY 6867**	160, 200	2.9
GKN-M42x2	**KY 6868**	250	6

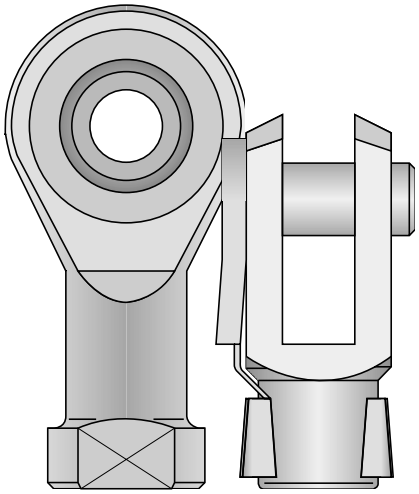

HOERBIGER ORIGA

A1P344E00DX00X

The right to introduce technical modifications is reserved

Piston Rod Eye to CETOP RP 103 P for Cylinder Diameter 8-250 mm

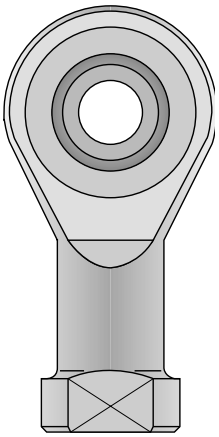

Dimensions

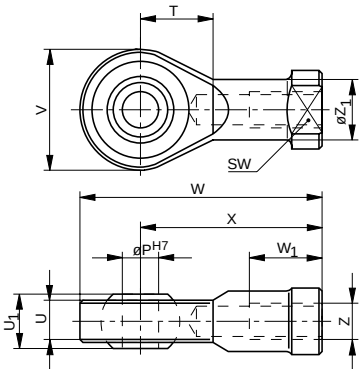

Material:
galvanized steel

Dimension Table (mm)

for Cyl.-Ø	Øp^{H7}	T	U	U_1	V	W	W_1	X	Z	ØZ_1	SW
8, 10	5	9	6	8	16	35	12	27	M4	9	8
12, 16	6	11	6.75	9	20	40	12	30	M6	10	11
20, 25	8	13	9	12	24	48	16	36	M8	12.5	14
32	10	15	10.5	14	28	57	20	43	M10	15	17
25, 32	10	15	10.5	14	28	57	20	43	M10x1.25	15	17
40	12	17	12	16	32	66	22	50	M12	17.5	19
40	12	17	12	16	32	66	22	50	M12x1.25	17.5	19
50, 63	16	22	15	21	42	85	28	64	M16	22	22
50, 63	16	22	15	21	42	85	28	64	M16x1.5	22	22
80, 100	20	26	18	25	50	102	33	77	M20x1.5	27.5	32
125	25	31	22	31	60 max.	124 max.	42 min.	94	M24x2	33.5	36
125	30	36	25	37	70 max.	145 max.	51 min.	110	M27x2	40	41
160, 200	35	41	28	43	80 max.	165 max.	56 min.	125	M36x2	46	50
250	40	46	33	49	90 max.	187 max.	60 min.	142	M42x2	53	55

Order Instructions and Weight

Order Instructions Type	Order No.	for Cylinder-Ø	Weight (mass) (kg)
GA-M4	**KX 6023**	8, 10	0.021
GA-M6	**KY 6144**	12, 16	0.025
GA-M8	**KY 6145**	20, 25	0.043
GA-M10	**KY 6146**	32	0.072
GA-M10x1.25	**KY 6147**	25, 32	0.072
GA-M12	**KY 6185**	40	0.107
GA-M12x1.25	**KY 6148**	40	0.107
GA-M16	**KY 6149**	50, 63	0.21
GA-M16x1.5	**KY 6150**	50, 63	0.21
GA-M20x1.5	**KY 6151**	80, 100	0.38
GAN-M24x2	**KY 6152**	125	0.65
GAN-M27x2	**KY 6862**	125	1.0
GAN-M36x2	**KY 6863**	160, 200	1.6
GAN-M42x2	**KY 6864**	250	3.5

Cylinder Accessories

Pivot for mounting B
- **for cylinder diameter 32-100 mm**
- **for cylinder diameter 125-200 mm to CETOP RP 107 P**

For 90° rotation

Series GL-...
GLN-...

Pivot for Cylinder Diameter 32-100 mm

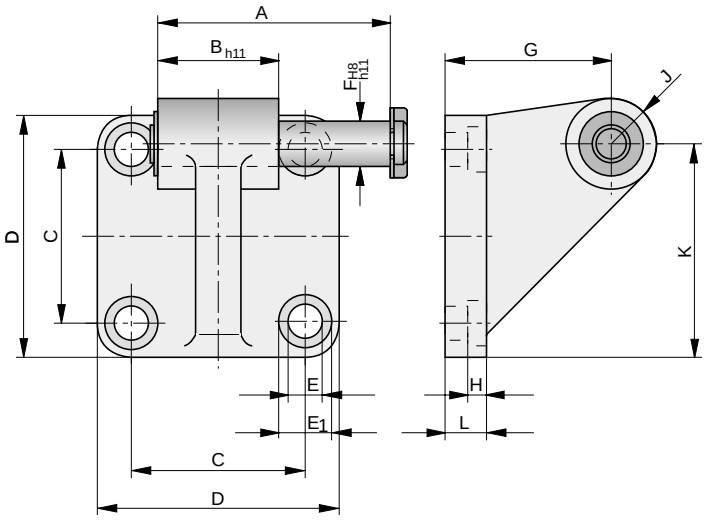

Material: cast iron, passivated

Dimension Table (mm)

For cyl.-Ø	A	B_{h11}	C	D	ØE	$ØE_1$	$ØF^{H8}_{h11}$	G	H	J	K	L
032	46	26	32.5	46	7	12	10	32	5	10	39	10
040	53	28	38	52	7	12	12	36	5	12	43.5	10
050	61	32	46.5	64	9	14	12	45	5	12	56.5	11
063	71	40	56.5	74	9	14	16	50	5	16	64	11
080	91	50	72	94	11	17	16	63	6.5	16	86	14
100	111	60	89	113	11	17	20	73	6.5	20	102.5	16

To Be Phased Out

Order Instructions and Weight

Order Instructions Type	Order No.	for Cylinder-Ø	Weight (mass) (kg)
GL-032	**PD 25621**	032	0.21
GL-040	**PD 25622**	040	0.315
GL-050	**PD 25623**	050	0.49
GL-063	**PD 25624**	063	0.82
GL-080	**PD 25625**	080	1.45
GL-100	**PD 25626**	100	2.60

Pivot consisting of:

Bracket
Pin
Circlip

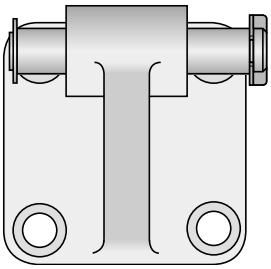

For cylinders see 2.29.001E, 2.30.050E, 2.51.001E

A1P340E00J Z00X

The right to introduce technical modifications is reserved

Pivot for Mounting B to VDMA 24562

for 90° angle

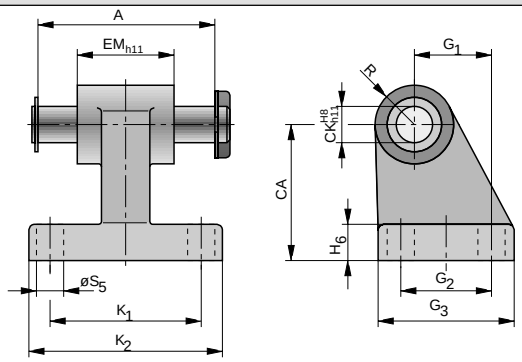

Material: cast aluminium

Order Instructions, Dimension Table (mm), Weight

Order Instructions Type	Order No.	Cyl.-Ø	A	CA	CK^{H8}_{h11}	EM_{h11}	G_1	G_2	G_3	H_6	K_1	K_2	R_1	$øS_5$	Weight (kg)
GLN-032	**PD 40844**	32	46	32	10	26	21	18	31	8	38	50	10	6.6	0.092
GLN-040	**PD 40845**	40	53	36	12	28	24	22	35	10	41	53	11	6.6	0.131
GLN-050	**PD 40846**	50	61	45	12	32	33	30	45	12	50	64	13	9	0.193
GLN-063	**PD 40847**	63	71	50	16	40	37	35	50	12	52	66	15	9	0.305
GLN-080	**PD 40848**	80	91	60	16	50	47	40	60	14	66	84	15	11	0.460
GLN-100	**PD 40849**	100	111	70	20	60	55	50	70	15	76	94	19	11	0.840

Pivot to CETOP RP 107 P for Cylinder Diameter 125-250 mm

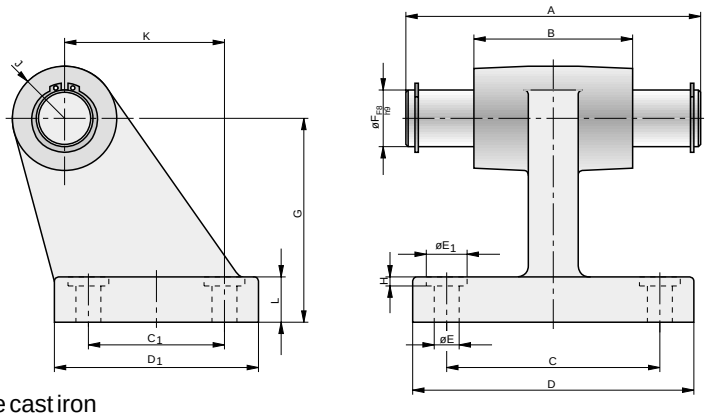

Material: nodular graphite cast iron

Dimension Table (mm)

for Cyl.-Ø	A	B	C	C_1	D	D_1	ØE	$ØE_1$	$ØF^{H8}_{h9}$	G	H_{max}	J	K	L
125	130	70	94	60	124	90	11	18	25	90	4	23	70	20
160	170	90	118	88	156	126	14	20	30	115	4	32	97	25
200	170	90	122	90	162	130	16	24	30	135	4	32	105	30
250	200	110	150	110	200	160	20	30	40	165	4	40	128	35

Order Instructions and Weight

Order Instructions Type	Order No.	for Cylinder-Ø	Weight (mass) (kg)
GLN-125	**PD 24027**	125	3.0
GLN-160	**PD 24028**	160	6.5
GLN-200	**PD 39193**	200	8.0
GLN-250	**PD 39194**	250	13.5

Cylinder Accessories

Pivot for mounting E for cylinder diameter 30-200 mm

Series EL-..

Dimensions

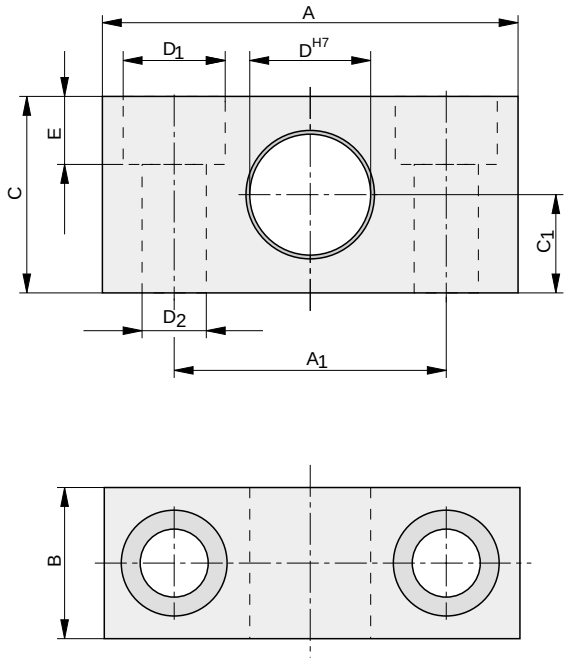

Material: Ø32 - Ø125 cast aluminium
Ø160 / Ø200 aluminium

Dimension Table (mm)

for Cyl.-Ø	A	A_1	B	C	C_1	$ØD^{H7}$	$ØD_1$	$ØD_2$	E
32	55	36	20	26	13	12	13.5	8,4	9
40, 50	55	36	20	26	13	16	13.5	8,4	9
63, 80	65	42	25	30	15	20	16.5	10.5	11
100, 125	75	50	28	40	20	25	19	13	13
160, 200	92	60	35	60	30	32	26	18	17.5
250	140	90	40	70	35	40	33	22	21.5

Order Instructions and Weight

Order Instructions Type	Order No.	for Cylinder-Ø	Weight (mass) (kg)
EL 032	**PD 23381**	32	0.06
EL 040/050	**PD 23382**	40, 50	0.06
EL 063/080	**PD 23383**	63, 80	0.10
EL 100/125	**PD 23384**	100, 125	0.175
EL 160/200	**PD 24425**	160, 200	0.35
EL 250	**PD 25763**	250	0.50

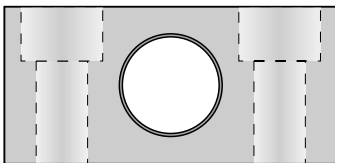

For cylinder see 2.29.001E, 2.30.050E, 2.34.001E, 2.34.010E, 2.51.001E, 2.54.001E, 2.54.002E, 2.75.002E, 2.75.003

A1P197E00DX00X

The right to introduce technical modifications is reserved

Cylinder Accessories

Compensating Coupling for Piston Rods

Series AK....

Dimensions

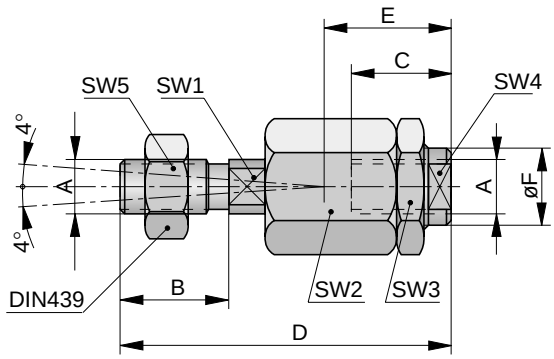

Dimension Table (mm)

Type	A	B	C	D	E	ØF	SW1	SW2	SW3	SW4	SW5
AK-M4	M4	8	14	34	20	12,0	3	12	12	12	7
AK-M6	M6	12	11	36	14	8,5	5	13	13	7	10
AK-M8	M8	13	14	46	20	12,5	7	17	17	10	13
AK-M10	M10	20	23	70	31	21,5	12	30	30	19	17
AK-M10x1,25	M10x1,25	20	23	70	31	21,5	12	30	30	19	17
AK-M12	M12	23	23	67	31	21,5	12	30	30	19	19
AK-M12x1,25	M12x1,25	23	23	67	31	21,5	12	30	30	19	19
AK-M16	M16	40	32	112	45	33,5	19	41	41	30	30
AK-16x1,5	M16x1,5	40	32	112	45	33,5	19	41	41	30	30
AK-M20x1,5	M20x1,5	39	42	122	56	33,5	19	41	41	30	30
AK-M24x2	M24x2	48	48	147	51	39	22	55	55	32	36
AK-M27x2	M27x2	48	48	147	51	39	24	55	55	32	41

Material: Steel
Tensile strength: 500-600 N/mm²

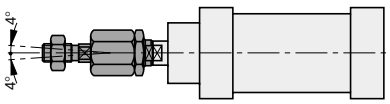

Angular compensation

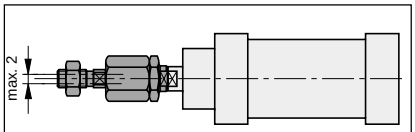

Radial compensation of the centre axis

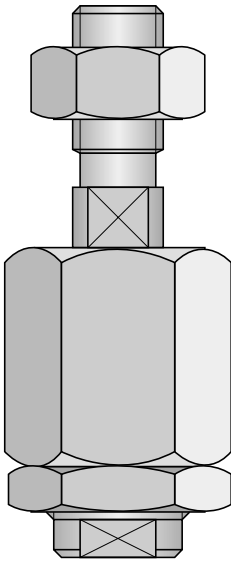

The compensating coupling is used to connect the piston rod end of all types of cylinders to the machine parts which are to be moved.
It compensates for radial and angular misalignments.

Order Instructions and Weight

Order Instructions		Weight (mass) (kg)
Type	**Order No.**	
AK-M4	**KY 1152**	0,018
AK-M6	**KY 1126**	0,021
AK-M8	**KY 1127**	0,049
AK-M10	**KY 1128**	0,218
AK-M10x1,25	**KY 1129**	0,218
AK-M12	**KY 1130**	0,207
AK-M12x1,25	**KY 1131**	0,207
AK-M16	**KY 1132**	0,634
AK-M16x1,5	**KY 1133**	0,637
AK-M20x1,5	**KY 1134**	0,711
AK-M24x2	**KC5035**	1,65
AK-M27x2	**KC5036**	1,66

A1P280E00DXW00X

The right to introduce technical modifications is reserved

Cylinder Accessories

Magnetic Switch (Reed Contact)

Two wire technology
Universal voltage version
with LED-display
max. switching capacity: 20 W/30 VA

Series DZRK / DZRS

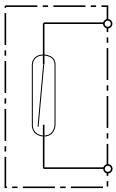

Characteristics

Characteristics	Symbol	Unit	Description	
Installation			In any position	
Material			Housing: Macrolon PI Mounting: Aluminium	
Temperature range	ϑ_{min} ϑ_{max}	°C °C	-25 +75	
Service life			10 x 10^6 switching cycles	
Switching point accuracy			± 0.1 mm	
Max. impulse acceleration		m/s^2	50 g (contact closed)	
Voltage type			Universal: AC and DC	
Voltage			10-230 V 10-70 V for version with connector	
Contact type			1 make contact	
Switching capacity			20 W, 30 VA max.	
Max. switching current	$I_{S\ max}$	A	0.5	
Switching frequency		1/min	2200	
Electrical protection			IP67 to DIN 40050	
Insulating material			F to VDE 0580	
Connection			PVC cable 2.5 m long, or with connector *)	
Weight (mass)		kg	0.052 (DZRK)	0.006 (DZRS)
with mounting			0.070 (DZRK)	0.025 (DZRS)

*) Cable 5 m long on request
PUR cable (oil resistant) on request

Switching Characteristics

H = Hysteresis
S = Response range

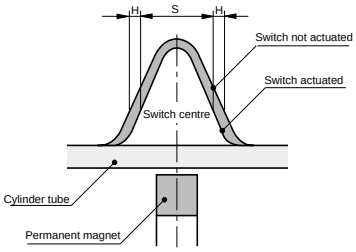

The magnetic switches are mounted on the cylinder tie rods.
One or more switches can be fitted, depending on the stroke length.
For cylinders for contactless position sensing see Series DZ, AZZ.

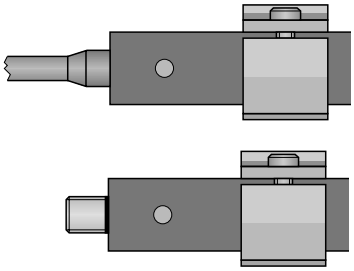

Response Range, Overrun Speed

Cylinder Ø (mm)	Response range s (mm)	Overrun speed $V_{max.}$
32	11	$V_{max.} = \frac{s}{ta}$ ta = response time of following device
40	11	
50	13	
63	13	
80	15	
100	16	

For cylinder data sheet see 2.30.050E, 2.34.010E, 2.75.002E, 2.75.003E
For installation instructions see A6P047E

Data Sheet No. 2.90.031E-1

A1P468E00DX00X

The right to introduce technical modifications is reserved

HOERBIGER ORIGA

Dimensions (mm) Version with Cable

Type: DZRK

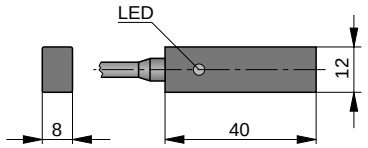

Dimensions (mm) Version with Connector

Type: DZRS

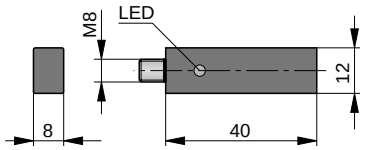

Mounting for Tie Rod Cylinder ø32-63mm

Type: KLAD 32

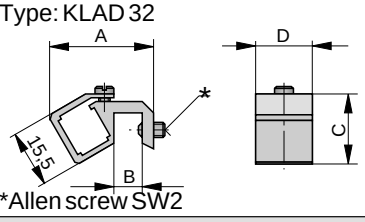

Dimension Table (mm) for Mounting

Type	for Cylinder ø	A	B	C	D
KLAD 32	32-63	27.5	8	18.5	15
KLAD 80	80-125	32.5	12.1	17.5	15
KLAD 160	160-200	41.5	17	18.5	14
KLAD 250	250	46.7	21	33	14

Mounting for Tie Rod Cylinder ø80-250mm

Type: KLAD 80, KLAD 160, KLAD 250

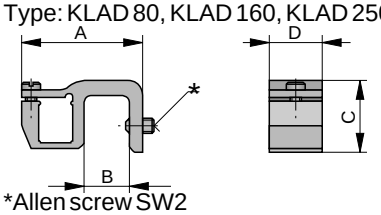

Internal Construction

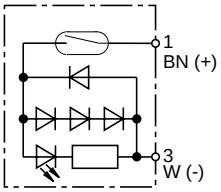

Examples of Connections

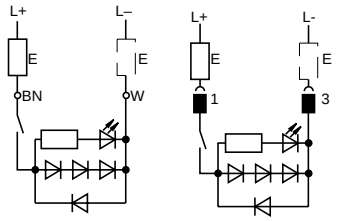

Connection Instructions

Referring to the "Examples of connections":

- The magnetic switches are not short circuitproof and must only be operated with their working resistance and never connected direct to mains supply.
- In DC operation, the switching function still works if polarity is reversed, but the function indicator (LED) is switched off (pole-safe).
- The switches can be used in positive or negative switching mode.
- Magnetic switches with connectors have 3 connections but only connections (1) and (3) are used. With the cable set, only the brown wire (+) and the blue wire (-) are used.

Examples of Additional Protective Measures

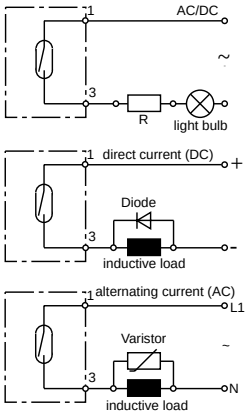

With large capacitive loads (long cable) or light bulbs, current limitation should be provided by a resistor R.

With large inductive loads (magnetic coils of higher capacity, relays, etc.) voltage peaks should be suppressed by a diode (with DC) or by a varistor (with AC).

Order Instructions

Version			Order Instructions Type	Order No.
With cable 2.5 m long			**DZRK**	**KY 3235**
With connector			**DZRS**	**KY 3236**
Mounting element	32-63	(AZZ)	**KLAD32**	**KY 3217**
	80-125	(AZZ, DZ)	**KLAD80**	**KY 3218**
	160-200	(DZ)	**KLAD160**	**KY 3219**
	250	(DZ)	**KLAD 250**	**KC 3146**
Cable with connector for Type DZRS		2.5 m	**KS25**	**KY 3240**
		5 m	**KS50**	**KY 3241**
Cable Set with straight plug		2,5 m	**KSG**	**KC 3102**
		5 m	**KSG**	**KC 3104**
Cable Set with bent plug (90°)		5 m	**KSW**	**KC 3106**

Cylinder Accessories

Magnetic Switch
PNP-switching
(magneto-resistiv)

Three wire technology
DC Version
with LED indicator

Series DZMK / DZMS

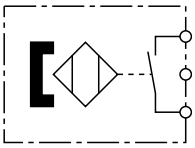

Characteristics

Characteristics	Symbol	Unit	Description	
Installation			In any position	
Material			Housing: Macrolon PI Mounting: Aluminium	
Temperature range	ϑ_{min} ϑ_{max}	°C °C	-25 +75	
Service life			10 x 10^6 switching cycles	
Switching point accuracy			± 0.1 mm	
Max. impulse acceleration		m/s^2	50 g (contact closed)	
Voltage type			DC	
Voltage			10-30 V	
Contact type			1 make contact	
Max. continuous current	$I_{D\ max}$	A	0.2	
Max. switching frequency		1/s	10000	
Electrical protection			IP67 to DIN 40050	
Insulating material			F to VDE 0580	
Connection			PVC cable 2.5 m long, or with connector *)	
Weight (mass)		kg	0.052 (DZMK)	0.006 (DZMS)
with mounting			0.070 (DZMK)	0.025 (DZMS)

*) Cable 5 m long on request
PUR cable (oil resistant) on request

Switching Characteristics

H = Hysteresis
S = Response range

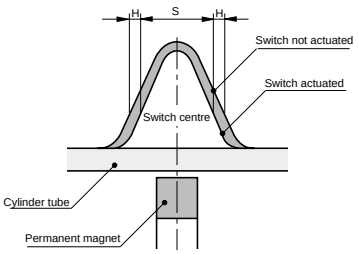

Note: Electromagnetic compatibility (EMV) to EN 50082-2/individual specification to IEC 801

The magnetic switches are mounted on the cylinder tie rods.
One or more switches can be fitted, depending on the stroke length (offset to each other on the circumference, if desired).
For cylinders for contactless position, sensing see Series DZ, AZZ.

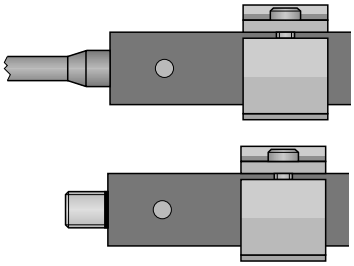

Response Range, Overrun Speed

Cylinder Ø (mm)	Response range s (mm)	Overrun speed $V_{max.}$
32	10	$V_{max.} = \frac{s}{ta}$ ta = response time of following device
40	10	
50	11	
63	11	
80	12	
100	13	

For cylinder data sheet see 2.34.010E, 2.30.050E, 2.75.002E, 2.75.003E
For installation instructions see A6P047E

Data Sheet No. 2.90.032E-1

A1P469E00IU40X

The right to introduce technical modifications is reserved

HOERBIGER ORIGA

Dimensions (mm) Version with Cable

Type: DZMK

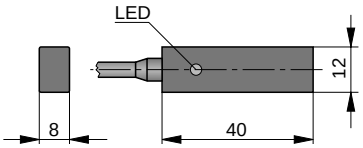

Dimensions (mm) Version with Connector

Type: DZMS

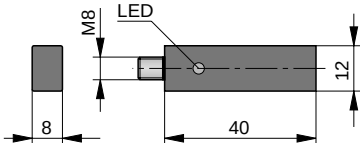

Mounting for Tie Rod Cylinders ø32-63mm

Type: KLAD 32

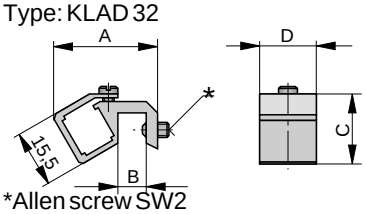

Dimensions Table (mm) for Mountings

Type	for Cylinder-Ø	A	B	C	D
KLAD 32	32-63	27,5	8	18,5	15
KLAD 80	80-125	32,5	12,1	17,5	15
KLAD 160	160-200	41,5	17	18,5	14
KLAD 250	250	46,7	21	33	14

Mounting for Tie Rod Cylinders ø80-250mm

Type: KLAD 80, KLAD 160

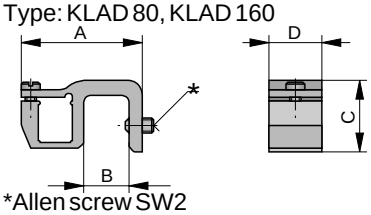

Example of DZMK Connections

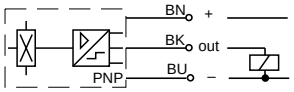

Example of DZMK Connections

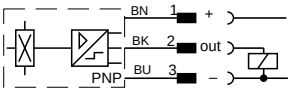

Connection Instructions

Referring to the "Examples of connections":

- The magnetic switches are not short circuit-proof.
- If connection polarity is reversed, the switching function still works (pole-safe).
- The switches are to be used in positive switching mode.

Order Instructions

Version			Order Instructions Type	Order No.
With cable 2.5 m long			**DZMK**	**KY 3237**
With connector			**DZMS**	**KY 3238**
Mounting element	32-63	(AZZ)	**KLAD32**	**KY 3217**
	80-125	(AZZ, DZ)	**KLAD80**	**KY 3218**
	160-200	(DZ)	**KLAD160**	**KY 3219**
	250	(DZ)	**KLAD 250**	**KC 3146**
Cable with connector		2.5 m	**KS 25**	**KY 3240**
for Type DZMS		5 m	**KS 50**	**KY 3241**
Cable Set with straight plug		2.5 m	**KSG**	**KC 3102**
		5 m	**KSG**	**KC 3104**
Cable Set with bent plug (90°)		5 m	**KSW**	**KC 3106**

Cylinder Accessories

Magnetic Switch (pneumatic)

with output indicator (pin)

Series DZPV

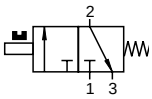

Characteristics

Characteristics	Symbol	Unit	Description
Installation			In any position
Material			Housing: Macrolon
Temperature range	ϑ_{min} ϑ_{max}	°C °C	-10 +60
Service life			10 x 10^6 switching cycles
Switching point accuracy		mm	± 0,2
Max. impulse acceleration		m/s^2	50 g
Nominal diameter		mm	2
Medium			Filtered compressed air
Filter fineness	max.	µm	40
Lubrication			None required
Nominal pressure		bar	6
Operating pressure range	p_{min} p_{max}	bar bar	2 6
Nominal flow		l/min	40
Switching frequency		Hz	40 (without switching volume)
Connection			Push-on nipples for NW3 tubing
Weight (mass)		kg	0,014
with mounting			0,020

Switching Characteristics

H = Hysteresis
S = Response range

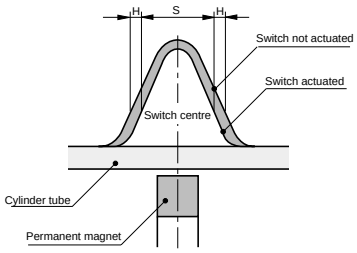

The magnetic switches are mounted on the cylinder tube profile.
One or more switches can be fitted, depending on the stroke length.
For cylinders for contactless position sensing see Series AZ,AZV.

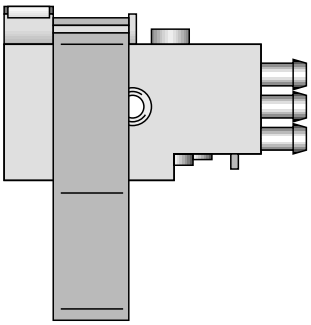

Response Range, Overrun Speed

Cylinder Ø (mm)	Response range s (mm)	Overrun speed $V_{max.}$
32	12	$V_{max.} = \frac{s}{ta}$ ta = response time of following device
40	12	
50	12	
63	13	
80	13	
100	13	

For cylinder data sheet see 2.29.001, 2.34.001, 2.51.001, 2.54.001-002, 2.75.003
For installation instructions see A6P047

Data Sheet No. 2.90.033E-1

A1P470E00IU40X

TThe right to introduce technical modifications is reserved

HOERBIGER ORIGA

Dimensions (mm) for Tube Connection NW3

Type: DZPV

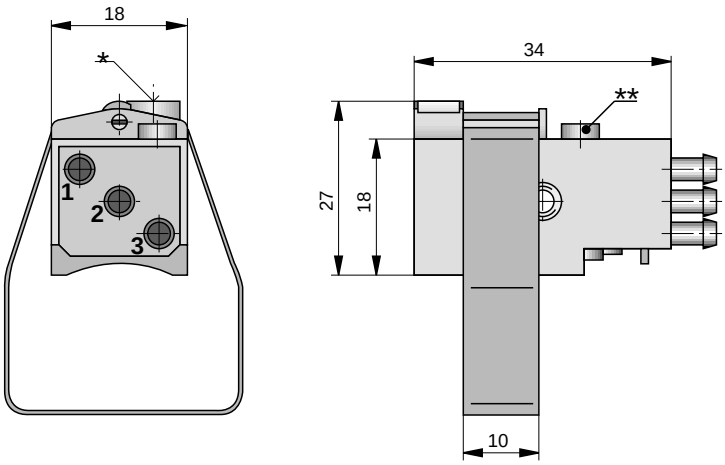

* Tightening screw
** Indicator

Assembly Instructions

- The mounting is designed only for AZ cylinders. The switch must be mounted on a radiussed side of the cylinder barrel (not on a side with a dovetail groove).
- When fitting the DZPV, ensure that the tightening screw between strap and switch is tightened with a torque not exceeding 1.5 Nm.
- To avoid interference from other magnetic fields, pneumatic cylinders installed close together should be at least 20 mm apart.
- To avoid interference from other ferromagnetic components with the function of the DZPV, a minimum spacing of 15 mm should be maintained.
- When fitting the DZPV, ensure that port 3 (exhaust) is never closed.

  The DZPV pneumatic proximity switch requires the following operating conditions:
  - filtered and moderately lubricated compressed air
  - compressed air without aggressive constituents
  - operating pressure from 2 to 8 bar

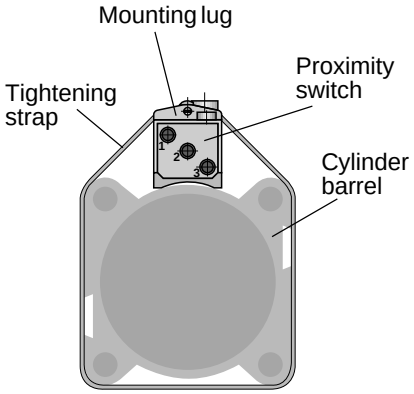

Order Instructions

Version	Cylinder ø	Order Instructions	
		Type	**Order No.**
Switch		**DZPV**	**KZ 2364**
Mounting element	32-100	**KLAZ 32**	**KC 8255**

Cylinder Accessories

Magnetic Switch
NPN-switching
(magneto-resistiv)

Three wire technology
DC Version
with LED indicator

Series DZMK0600
DZMS0600

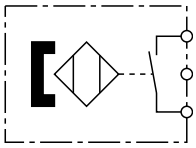

Characteristics

Characteristics	Symbol	Unit	Description	
Installation			In any position	
Material			Housing: Macrolon PI Mounting: Aluminium	
Temperature range	ϑ_{min} ϑ_{max}	°C °C	-25 +75	
Service life			10 x 10^6 switching cycles	
Switching point accuracy			± 0.1 mm	
Max. impulse acceleration		m/s^2	50 g (contact closed)	
Voltage type			DC	
Voltage			10-30 V	
Contact type			1 make contact	
Max. continuous current	$I_{D\ max}$	A	0.2	
Max. switching frequency		1/s	10000	
Electrical protection			IP67 to DIN 40050	
Insulating material			F to VDE 0580	
Connection			PVC cable 2.5 m long, or with connector *)	
Weight (mass)		kg	0.052 (DZMK)	0.006 (DZMS)
with mounting			0.070 (DZMK)	0.025 (DZMS)

*) PUR cable (oil resistant) on request

Switching Characteristics

H = Hysteresis
S = Response range

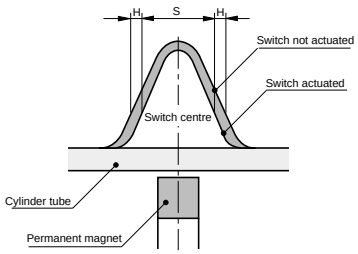

Note: Electromagnetic compatibility (EMV) to EN 50082-2/ individual specification to IEC 801

The magnetic switches are mounted on the cylinder tie rods.
One or more switches can be fitted, depending on the stroke length (offset to each other on the circumference, if desired).
For cylinders for contactless position sensing see Series DZ, AZZ.

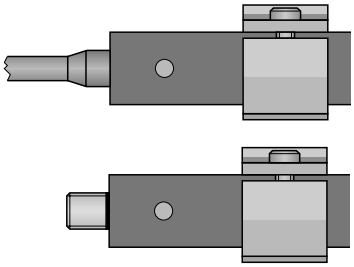

Response Range, Overrun Speed

Cylinder Ø (mm)	Response range s (mm)	Overrun speed $V_{max.}$
32	10	$V_{max.} = \frac{s}{ta}$ ta = response time of following device
40	10	
50	11	
63	11	
80	12	
100	13	

For cylinder data sheet see 2.30.050E, 2.34.010E, 2.75.002E, 2.75.003E
For installation instructions see A6P047E

Data Sheet No. 2.90.036E-1

A1P495E00IU40X

The right to introduce technical modifications is reserved

HOERBIGER ORIGA

Dimensions (mm) Version with Cable

Type: DZMK0600

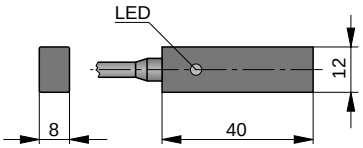

Dimensions (mm) Version with Connector

Type: DZMS0600

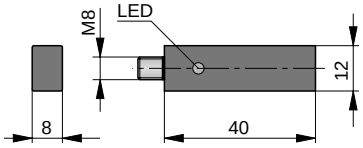

Mounting for Tie Rod Cylinder ø32-63mm

Type: KLAD 32

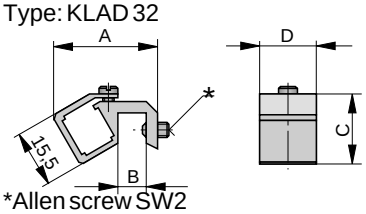

Dimensions Table (mm) for Mountings

Type	for Cylinder-Ø	A	B	C	D
KLAD 32	32-63	27,5	8	18,5	15
KLAD 80	80-125	32,5	12,1	17,5	15
KLAD 160	160-200	41,5	17	18,5	14
KLAD 250	250	46,7	21	33	14

Mounting for Tie Rod Cylinder ø80-250mm

Type: KLAD 80, KLAD 160, KLAD 250

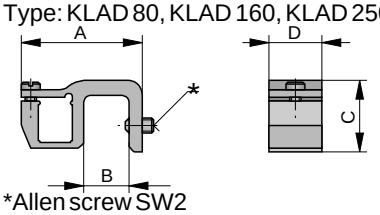

Example of DZMK0600 Connections

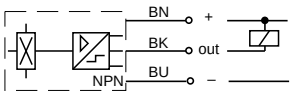

Example of DZMS0600 Connections

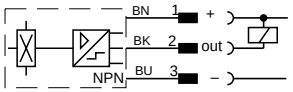

Connection Instructions

Referring to the "Examples of connections":

- The magnetic switches are not short circuit-proof.
- If connection polarity is reversed, the switching function still works (pole-safe).
- The switches are to be used in negative switching mode.

Order Instructions

Version			Bestellangabe Type	Order No.
With cable 2.5 m long			**DZMK0600**	**KC 3048**
With connector			**DZMS0600**	**KC 3049**
Mounting element	32-63	(AZZ)	**KLAD32**	**KY 3217**
	80-125	(AZZ, DZ)	**KLAD80**	**KY 3218**
	160-200	(DZ)	**KLAD160**	**KY 3219**
	250	(DZ)	**KLAD 250**	**KC 3146**
Cable with connector		2.5 m	**KS25**	**KY 3240**
for Type DZMS0600		5 m	**KS50**	**KY 3241**
Cable Set with straight plug		2.5 m	**KSG**	**KC 3102**
		5 m	**KSG**	**KC 3104**
Cable Set with bent plug (90°)		5 m	**KSW**	**KC 3106**

Cylinder accessories

Sensor
– welding proof –

Version:
- **inductive**
  pnp and npn switching
- **LED indication**

Series **UMS 7000 (pnp)**
UMS 7600 (npn)

The sensors are fitted into the dovetail rails of the AZ, SZ or OSP-P cylinders and fixed into their position with the mounting element.

Note:
Not suited for cylinder series NZK

Characteristics

Characteristics	Symbol	Unit	Description
Installation			In any position
Material			Housing: PA12-GF30 Metal housing Mounting: Aluminium anodised
Temperature range	ϑ_{min} ϑ_{max}	°C °C	-25 +70
Service life			10 x 10^6 switching cycles
Hysteresis		mm	≤1,0
Repeatability		mm	≤0,1
Shock resistance		m/s^2	Max. 50 g
Switching impulse			Positive (pnp) or negative (npn)
Operating voltage			Direct current (DC)
Voltage		V	10-30
Current drop		V	Max.1,8
Contact function			Make contact
All. residual ripple		%	10
Current consumption		mA	Max. 2,0
Switching current		A	Max. 0,2
Switching frequency		Hz	40
Electrical protection			IP67
Short circuit protection			Built in
Pole reversal protection			Built in
Connection			3-pole connector M12x1
Operation indicator			LED

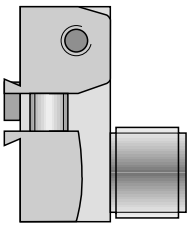

Cylinderdata sheets see 2.29.001E, 2.34.001E, 2.51.001E, 2.54.001E, 2.54.002E

A1P537E00IX00X

The right to introduce technical modifications is reserved.

HOERBIGER ORIGA

Dimensions (mm)

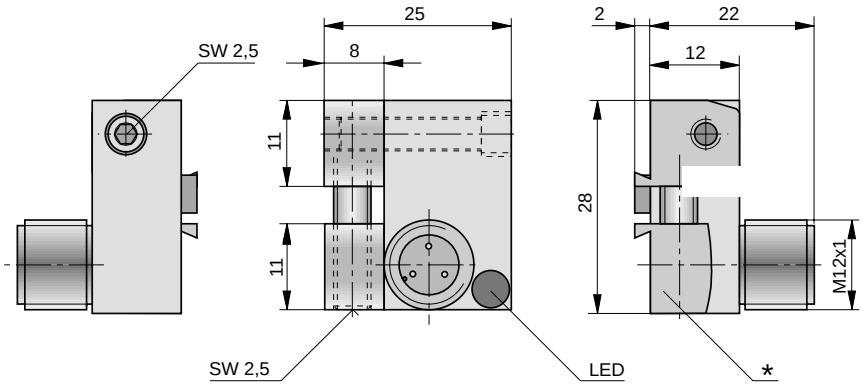

* Note:
Please order the mounting separately, it is not included with the sensor.

Electrical Connection Type UMS 7000

positive switching (pnp)

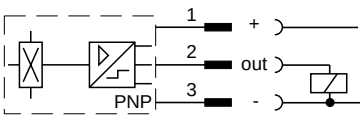

Electrical Connection Typ UMS 7600

positive switching (npn)

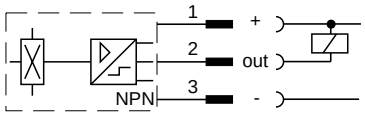

Assembly Instructions

Electrical connection:

- The sensors are short circuit proof.
- Pole reversal does not lead to failure of switching function or loss of LED indication (pole safe).

Pin Assignment

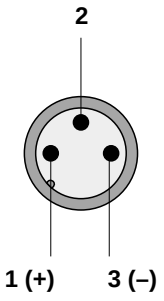

Order Instructions

Version	Bestellangabe	
	Type	**Order No.**
Sensor – welding proof, pnp-switching	**UMS7000**	**KC 3372**
Sensor – welding proof, npn-switching	**UMS 7600**	**KC 3375**
Mounting	**KLU**	**KC 8293**

Cylinder Accessories

Sensor

Reedswitch

Series RS

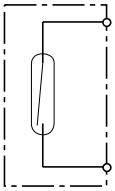

Characteristics

Characteristics	Symbol	Unit	Description		
Switching function			Make/brake contact		
Cable length		m	Connector with 10 cm cable	2,5	5,0
Cable type			PVC highly flexible		
Cable diameter		mm^2	2 x 0,14		
Connection			2-wire, open ended or 3-pole connector		
Cable colours/assignment			brown = + to DIN EN 50044		
Temperature range		°C	-25 to +80		
Service life			>10 x 10^6 switching cycles		
Switching hysteresis		mm	1,5; for series OSP <8 *		
Repeatability/ Switching point		mm	± 0,2 *		
Shock resistance		g	< 50 at 50 Hz and 1mm stroke		
Operating voltages					
Make contact:		V	(5 DC) 10 to 240 AC/DC		
Brake contact:		V	(5 DC) 10 to 70 AC/DC		
Opener:		V	(5 DC) 10 to 150 AC/DC		
Voltage drop			< 3 V		
Switching capacity		W/VA	< 10		
Switching current		mA	< 500		
Max. permanent current		mA	< 200		
Switchable capacity		µF	0,1 at 100 Ω and 24 V DC		
Switching distance		mm	> 8 *		
Electrical protection			IP67		
Short circuit proof			No		
Pole reversal proof			No		
Operation indicator			LED yellow		
Electromagnetic compatibility			To EN 60947		
Switch-off delay			None		
Switching time		ms	< 2		
Switching point		mT	2,5 to 4		
Weight		g	45 (RS-K); 10 (RS-S)		

* These values depend on the type and diameter of cylinder used.
– please consult us,

The sensors are fitted into the dovetail rails of the **AZ**, **SZ** , **OSP-**, **NZK** and **NZKV** cylinders, or the special mounting of the **R**-cylinder.

A1P618J00BZ80X

The right to introduce technical modifications is reserved.

Cylinder data sheets see 2.13.004E, 2.14.010E, 011,025, 2.28.001E, 2.29.001E, 2.34.001E, 2.47.001E, 2.51.001E, 2.54.001E, 002, 1.10.002E, 1.20.002E, 1.30.002E

Internal Construction

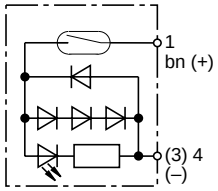

Electrical Connection

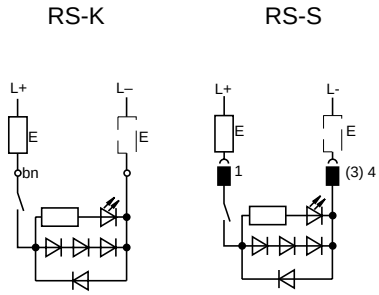

Assembly Instructions

See operating instructions included with delivery!

Allowable minimal bending radius:
Fixed ≥ 20 mm
Moving ≥ 70 mm

Examples of Additional Protective Measures

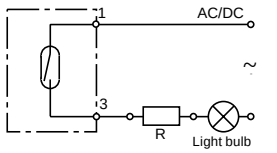

With large capacitive loads (long cable) or light bulbs, current limitation should be provided by a resistor R.

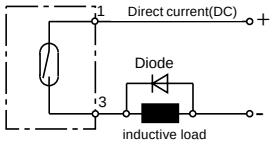

With large inductive loads (magnetic coils of higher capacity, relays, etc.) voltage peaks should be suppressed by a diode (with DC) or by a varistor (with AC).

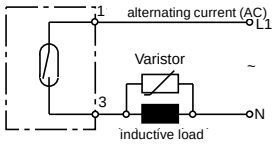

Pin assignment - plug side to DIN EN 50044

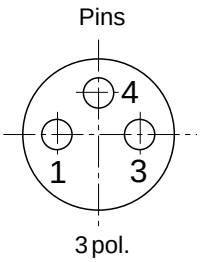

1 = brown = plus
3 = blue = minus
4 = black = output

Dimensions (mm)
Cable version

Type:RS-K

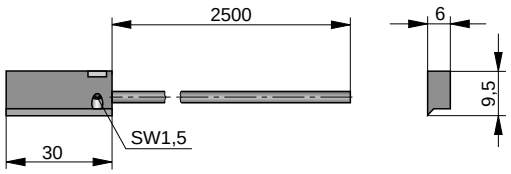

Dimensions (mm)
Connector version

Type: RS-S

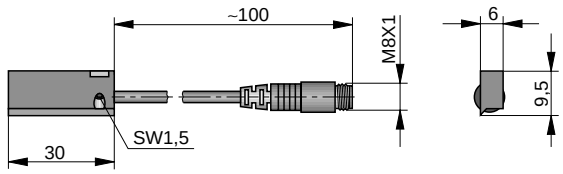

Order Instructions

Version	Order Instructions		
	Print	**Type**	**Order No.**
Make contact with M8 connector Pin 4 neutral (not suited for standard Bus nodes or valve islands)	1+ 3 max. 70 V / 0,2 A	**RS-S**	**KL3046**
Make contact with M8 connector Pin 3 neutral (ES-S compatible connector; preferred type)	1+ 4 max. 70 V / 0,2 A	**RS-S**	**KL3047**
Brake contact with M8 connector Pin 3 neutral	1+ 3 max. 70 V / 0,2 A	**RS-S**	**KL3087**
Brake contact with 5,0 m cable	bn+ max. 150 V / 0,2 A	**RS-K**	**KL3048**
Make contact with 2,5 m cable	bn+ max. 240 V / 0,2 A	**RS-K**	**KL3043**
Make contact with 5,0 m cable	bn+ max. 240 V / 0,2 A	**RS-K**	**KL3045**
Cable set 2,5 m and connector M8 with lock nut		**KSG25**	**KC3102**
Cable set 5,0 m anc connector M8 with lock nut		**KSG50**	**KC3104**
Connector M8 without cable for custom made cables		**STG8**	**KC3152**

Dimensions (mm)
Mounting element

Type: KLUR

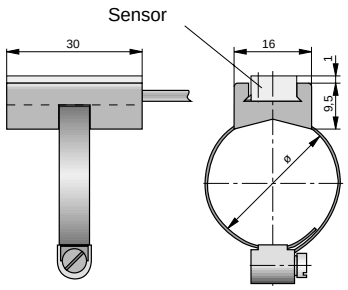

Order Instructions for mountings

Description	Cyl.-ø	Cylinder series	Type	Order No.
Mounting	8-10	R, RDV	**KLUR008/010**	**KC8360**
	12-16	R, RDV	**KLUR012/016**	**KC8361**
	20/25	R, RDV	**KLUR020/025**	**KC8362**
	32	R, RDV	**KLUR032**	**KC8363**
	40	R, RDV	**KLUR040**	**KC3477**
	50	R, RDV	**KLUR050**	**KC8364**
	63	R, RDV	**KLUR063**	**KC3478**

Cylinder Accessories

Sensors

Electronic Switch

Series ES

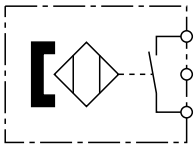

Characteristics

Characteristic	Symbol	Unit	Description		
Switching function			Make contact		
Cable length		m	Connector with 10 cm cable	2,5	5,0
Cable version			PVC highly flexible		
Cable diameter		mm^2	3 x 0,14		
Connection			3-wire open ended or 3-pole connector		
Cable colours/assignment			Brown = + to DIN EN 50044		
Temperature range		°C	-25 to +80		
Service life			Theoretically unlimited		
Switching hysteresis		mm	≤ 3,0 *		
Repeatability/ Switching point		mm	≤ 0,2 *		
Shock resistance		g	< 50 at 50 Hz and 1mm stroke		
Operating voltage		V	10 to 30 DC		
Voltage drop		V	< 3		
Power consumption		mA	< 20		
Switching current		mA	< 500		
Max. permanent current		mA	< 200		
Switchable capacity		µF	0,1 at 100 Ω and 24 V DC		
Switching distance		mm	> 8 *		
Electrical protection			IP67		
Short circuit proof			Yes		
Pole reversal proof			Yes		
Operation indicator			Yellow LED		
Electromagnetic compatibility			To EN 60947		
Switch-off delay		ms	25		
Switching time		ms	< 2 (on)		
Switching point		mT	2,5 to 4		
Weight		g	45 (ES-K); 10 (ES-S)		

* These values depend on the type and diameter of cylinder used. – please consult us.

The sensors are fitted into the dovetail rails of the **AZ**, **SZ** , **OSP-**, **NZK** and **NZKV** cylinders, or the special mounting of the **R**-cylinder.

A1P619E00BZ80X

The right to introduce technical modifications is reserved.

Cylinder data sheet see 2.13.004E, 2.14.010E, 011,025, 2.28.001E, 2.29.001E, 2.34.001E, 2.47.001E, 2.51.001E, 2.54.001E, 002, 1.10.002E, 1.20.002E, 1.30.002E

Electrical Connection ES-K (PNP)

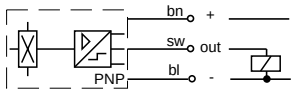

Electrical Connection ES-S (PNP)

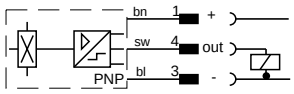

Assembly Instructions

See operating instructions included with delivery!

Allowable minimal bending radius:
Fixed ≥ 20 mm
Moving ≥ 70 mm

Electrical Connection ES-K (NPN)

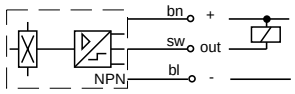

Electrical Connection ES-S (NPN)

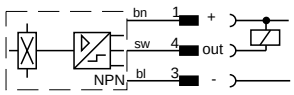

Pin Assignment - Plug Side to DIN EN 50044

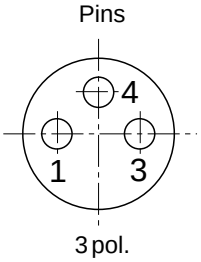

1 = brown = plus
3 = blue = minus
4 = black = output

Dimensions (mm)
Cable version

Type: ES-K

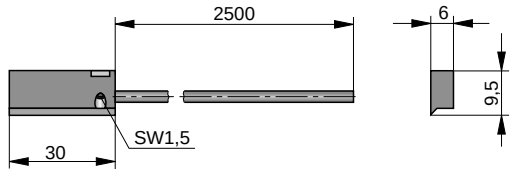

Dimensions (mm)
Connector version

Type: ES-S

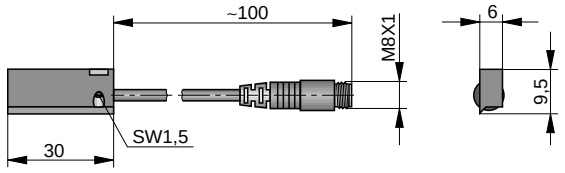

Order Instructions

Version	Print	Order Instructions Type	Order No.
PNP-Switching with M8 connector	PNP	**ES-S**	**KL3054**
NPN-Switching with M8 connector	NPN	**ES-S**	**KL3060**
PNP-Switching with 2,5 m cable	PNP	**ES-K**	**KL3055**
NPN-Switching with 2,5 m cable	NPN	**ES-K**	**KL3059**
PNP-Switching with 5,0 m cable	PNP	**ES-K**	**KL3056**
Cable set 2,5 m and connector M8 with lock nut		**KSG25**	**KC3102**
Cable set 5,0 m and connector M8 with lock nut		**KSG50**	**KC3104**
Connector M8 without cable for custom made cablesl		**STG8**	**KC3152**

Dimensions (mm)
Mounting element

Type: KLUR

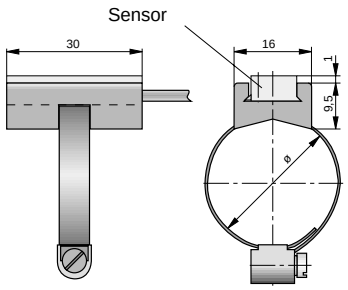

Order Instructions for mountings

Description	Cyl.-ø	Cylinder series	Type	Order No.
Mounting	8-10	R, RDV	**KLUR008/010**	**KC8360**
	12-16	R, RDV	**KLUR012/016**	**KC8361**
	20/25	R, RDV	**KLUR020/025**	**KC8362**
	32	R, RDV	**KLUR032**	**KC8363**
	40	R, RDV	**KLUR040**	**KC3477**
	50	R, RDV	**KLUR050**	**KC8364**
	63	R, RDV	**KLUR063**	**KC3478**

CONTROL ELEMENTS

Valves and Valve Islands

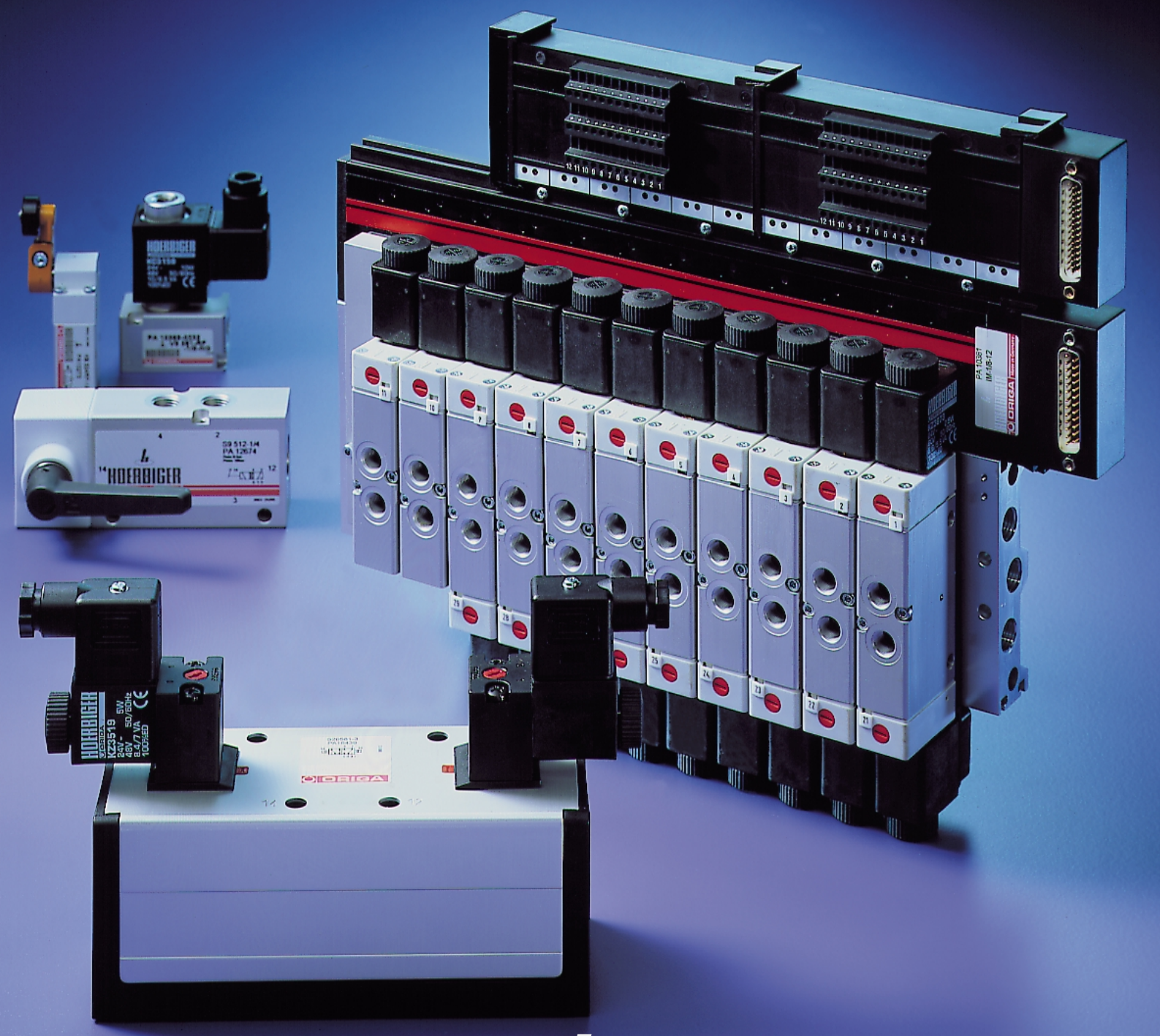

HOERBIGER
ORIGA

Table of Contents
Directional Control Valves
G1/8-G1/2

Series EV 381 G1/8-M5
3/2-Way Screw-In Valve 3.10.002E

Series K9 - G1/8
Survey 3.19.001E
3/2 way valves
- rotary lever 3.19.002E
- pushbutton 3.19.003E
- plunger 3.19.004E
- cam operated 3.19.005E
- toggle cam operated 3.19.006E
- cam operated, free cam left 3.19.007E
- cam operated, free cam right
- pivoted lever 3.19.008E
- pedal 3.19.009E
- panel mounting, interchangeable actuation 3.19.010E

Series DRS - G1/8
Survey 3.35.001E
4/3 way valves
- rotary lever 3.35.010E
- rotary switch 3.35.011E

Series S9 (V9) - G1/8
Survey 3.42.001E
3/2 way valves S9
- hand lever 3.42.002E
- pneumatically actuated 3.42.004E
- electrically pilot actuated 3.42.005E
- for panel mounting 3.42.007E
mounting diameter 22,3 and 30,3
5/2 way valves S9
- hand lever 3.42.050E
- pneumatically actuated 3.42.052E
- electrically pilot actuated 3.42.053E
- for panel mounting 3.42.055E
mounting diameter 22,3 and 30,3
5/3 way valves S9
- hand lever 3.42.100E
- safety hand lever 3.42.101E
- pneumatically actuated 3.42.102E
- electrically pilot actuated 3.42.103E
3/2 , 5/2 and 5/3 way valves S9 3.42.290E
with logic elements
- AND, OR
3/2 way valves V9
- electrically pilot actuated 3.42.310E
3/2 way valves V9 3.42.311E
- electrically pilot actuated NW 2,5

Valve Islands with Multipole Connection 3.42.332E
- version with HOERBIGERconnector
- version with connector to DIN 43652

Valve Islands with Bus Connection 3.42.333E
- INTERBUS S
- SINEC L2 DP

P-supply manifolds for S9 valves 3.42.450E
RPS-supply manifolds for S9 valves 3.42.455E

Special Valves G1/8
5/2 way valve 3.42.500E
- with NAMUR connections
5/2-way valve for two-hand safety operation 3.42.546E
-pneumatic
Pneumatic pressure switches 3.42.590E
-positiv and negativ function

Series S9 - G1/4
Survey 3.52.001E
3/2 way valves
- hand lever 3.52.002E
- safety hand lever 3.52.003E
- rotary lever 3.52.004E
- pneumatically operated 3.52.005E
- electrically pilot operated 3.52.006E
5/2 way valves
- hand lever 3.52.050E
- safety hand lever 3.52.051E
- rotary lever 3.52.052E
- pneumatically operated 3.52.053E
- electrically pilot operated 3.52.054E
5/3 way valves
- hand lever 3.52.100E
- safety hand lever 3.52.101E
- rotary lever 3.52.102E
- pneumatically operated 3.52.103E
- electrically pilot operated 3.52.104E
3/2 , 5/2 and 5/3 way valves 3.52.290E
with logic elements
- AND, OR, TIMER

Valve Islands with Multipole Connection 3.52.332E
- version with HOERBIGER connector
- version with connector to DIN 43652

Valve Islands with Bus Connection 3.52.333E
- INTERBUS S
- SINEC L2 DP

P-supply manifolds for S9 valves 3.52.450E
RPS-supply manifolds for S9 valves 3.52.455E

Special Valves G1/4
5/2 way valve 3.52.500E
- with NAMUR connections
5/2 way oscillating valve 3.52.545E
5/2 way valve for 2 hand safety operation 3.52.546E
- pneumatically actuated
3/2 way valve - pedal actuated 3.52.800E
5/2 way valve - pedal actuated 3.52.801E

Series S9 - G1/2
Survey 3.53.001E
3/2 way valves
- hand lever 3.53.002E
- rotary lever 3.53.003E
- pneumatically actuated 3.53.004E
- electrically pilot actuated 3.53.005E
5/2 way valves
- hand lever, safety hand lever 3.53.050E
- rotary lever 3.53.051E
- pneumatically actuated 3.53.052E
- electrically pilot actuated 3.53.053E
5/3 way valves
- hand lever, safety hand lever 3.53.100E
- rotary lever 3.53.101E
- pneumatically actuated 3.53.102E
- electrically pilot actuated 3.53.103E
P-supply manifolds for S9 valves 3.53.450E

Series S20-ISO – Size 1, 2, 3
Survey 3.61.001E
5/2 and 5/3 way valves size1
- pneumatically actuated 3.61.002E
- electrically pilot actuated 3.61.003E
5/2 and 5/3 way valves size 2
- pneumatically actuated 3.61.012E
- electrically pilot actuated 3.61.013E
5/2 and 5/3 way valves size 3
- pneumatically actuated 3.60.022E
- electrically pilot actuated 3.60.023E
5/2 and 5/3 way valves
nach VDMA 24563 **– Size** *01*
- pneumatically actuated 3.61.050E
- electrically pilot actuated 3.61.051E

Series ARKV
2/2 way valves 3.68.002E
- pneumatically actuated

Base Plates
Single base plates ISO 5599, Size 1-3 3.69.028E
Battery base plates ISO 5599, Size 1-3 3.69.029E
Single base plates
to VDMA 24563, Size 01 3.69.030E
Modules for base plate manifolds
to VDMA 24563, Size 01 3.69.031E

HOERBIGER-ORIGA GMBH · Südliche Römerstraße 15 · D-86972 Altenstadt · Tel. +49 +8861 221-0 · Fax +49 +8861 221-1305 · E-mail preu@hoerbiger.de
HOERBIGER-ORIGA GMBH · Industriestr. 8 · D-70794 Filderstadt · Tel. +49 +7158 1703-0 · Fax +49 +7158 64870 · E-mail dmarket@hoerbiger-origa.com
HOERBIGER-ORIGA LTD. · Tewkesbury Industrial Estate · Tewkesbury GL 20 8 ND GB · Tel. +44 1684 85 00 00 · Fax +44 1684 85 05 55
E-mail sales@hoerbiger-origa.com
HOERBIGER-ORIGA Pneumatik GmbH · Dr. Alexander-Schärf-Straße 12 · A-2700 Wiener Neustadt · Tel. +43 +2622 26071-0 · Fax +43 +2622 26071-5
E-mail amarket@hoerbiger-origa.com
HOERBIGER-ORIGA AB · Kungsgatan 10, Box 67 · SE-73622 Kungsör · Tel. +46 227 411 00 · Fax +46 227 411 29 · E-mail semarket@hoerbiger-origa.com
Internet http://www.hoerbiger-origa.com

3/2 Way Screw-In Valve

G1/8-M5

Actuation:
Electrical, directly operated by permanent signal

Series EV

EV 381RF-M5

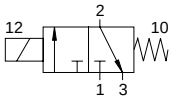

Characteristics to VDI 3290			Pressures quoted as gauge pressure	
Characteristics	Symbol	Unit	Description	
General Features				
Type			Directyl operated poppet vlave, normally closed	
Mounting			Screws into G1/8 thread	
Tube connection			Thread	
Port size			Port 1: G1/8 Port 2: M5	
Weight		kg	0.1	
Nominal diameter		mm	1	
Installation			In any position	
Ambient temperature range	ϑ_{min} ϑ_{max}	°C °C	-10 +60	Note: When using below freezing
Medium temperature range	ϑ_{min} ϑ_{max}	°C °C	-10 +70	point (°C) it is necessary to consult us.
Medium			Filtered compressed air	
Lubrication			With or without oil mist lubrication[1)]	
Pneumatic Characteristics				
Nominal flow	p_n	bar	6	
Operating pressure range	p_{min} p_{max}	bar bar	0 10	
Nominal flow	Q_N	l/min	30	
Actuation				
Electrical			Direct	
Voltage			AC	DC
Nominal voltage* — Standard version	U_n	V	220	24
Nominal voltage* — Low watt. version	U_n	V	220	24
Nominal voltage* — Ex-proof-version **	U_n	V	220	24
			Further voltages available on request	
Initial power consumption — Standard version		VA (W)	11	4.8
Initial power consumption — Low watt. version		VA (W)	7.8	2.7
Initial power consumption — Ex-proof-version **		VA (W)	5	5.1
Continuous consumption — Standard version		VA (W)	8..5	4.8
Continuous consumption — Low watt. version		VA (W)	4.9	2.7
Continuous consumption — Ex-proof-version **		VA (W)	5	5.1
Dury cycle	ED	%	100	
Electrical protection			IP65 to DIN 40050 (with plug)	
Insulating material			F (Ex-version E) to VDE 0580	
Connection			Plug to DIN 43650 form B[2)] Ex-version: Cable 1200 mm long	

* See Order Instructions for details
** For explosion-proof versions different technical requirements apply, according to Declaration of Conformity
1) We recommend the use of mineral oil type VG32 to ISO 3448
2) Plug for low wattage version available in DIN 43650 form A.

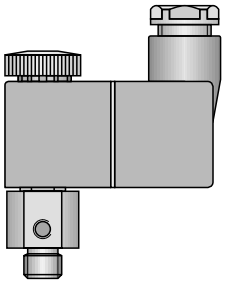

P-Leiste G1/8 siehe 3.42.450
Zubehör für Montage auf P-Leiste
O-Ring 10x2, 88-37H643-75; Schraube M3x40, ZP 3986

Data Sheet No. 3.10.002E-1

A1P518E00JAA00X

The right to introduce technical modifications is reserved

HOERBIGER ORIGA

Dimensions (mm)

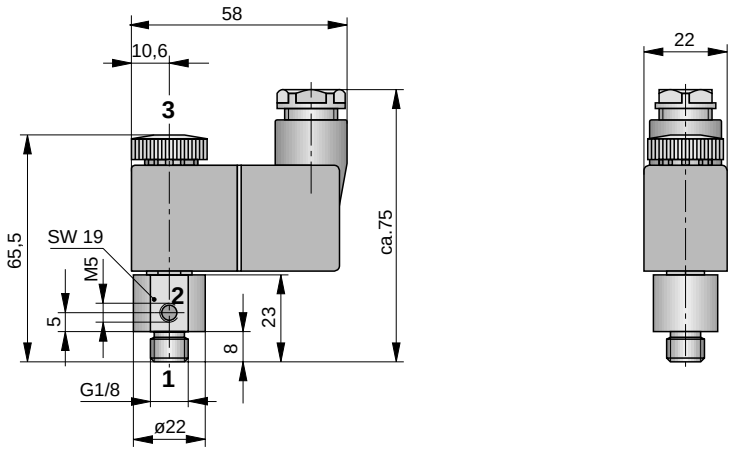

Order Instructions

Actuation	Return	Symbol	Order Instructions Type	Order No.
Electrical, permanent signal	Spring return	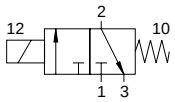	**EV 381RF-M5**	**PD 25076-..33**

Solenoid Version	Nominal voltage	Applicable for	Key code
Standard version	220 V/50 (60) Hz	110 V=	61
	24 V=	60 V/50 (60) Hz	02
Low wattage version	24 V=		13
	220 V/50 (60) Hz		69
Ex-proof version *	24 V=		48
	220 V/50 (60) Hz		98

* For explosion-proof versions different technical requirements apply, according to Declaration of Conformity

Further voltages available on request

PNEUMATIC

GROUP

3/2 WAY VALVES
G1/8
SERIES K9

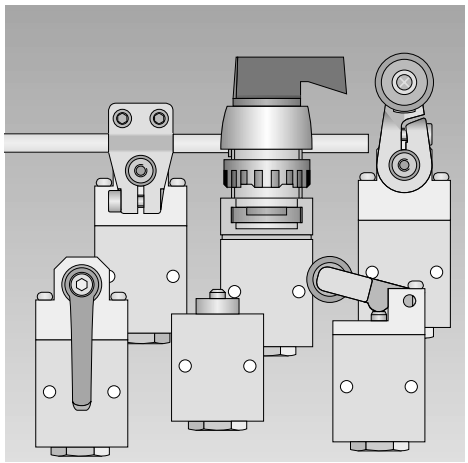

HOERBIGER

ORIGA

Actuation	Symbol	Mounting Ø (mm)	Order Instructions Type	Order No.	Data Sheet No.
Rotary lever, indexed	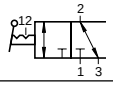		**K9 312-1/8**	**PA 10269**	3.19.002E
Rotary lever, spring return	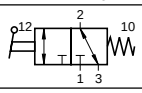		**K9 312RF-1/8**	**PA 10270**	3.19.002E
Rotary lever, indexed, secured in both positions	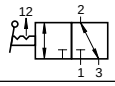		**K9 312S-1/8**	**PA 10349**	3.19.002E
Pushbutton	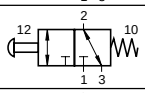		**K9 314RF-1/8**	**PA 10271**	3.19.003E
Cam operation	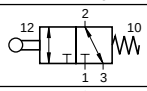		**K9 321RF-1/8**	**PA 10272**	3.19.005E
Toggle cam operation	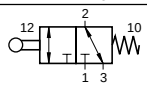		**K9 324RF-1/8**	**PA 10273**	3.19.006E
Plunger operated	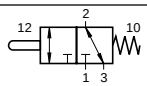		**K9 323RF-1/8**	**PA 10235**	3.19.004E
Cam operated free cam left	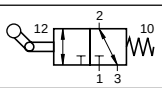		**K9 325RF-1/8**	**PA 10274**	3.19.007E
Cam operated free cam right	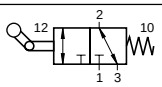		**K9 326RF-1/8**	**PA 10275**	3.19.007E
Pivoted lever	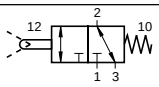		**K9 329RF-1/8**	**PA 10276**	3.19.008E
Pedal	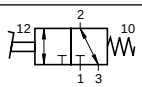		**K9 331RF-1/8**	**PA 10277**	3.19.009E
Panel mounting, valve with adaptor, interchangeable actuation as follows:	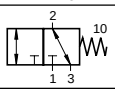		**K9 390RF-1/8**	**PA 10278**	3.19.010E
rotary lever, indexed,		22	**12T-22**	**KX 9355**	3.19.010E
for panel mounting		30	**12T-30**	**KX 9314**	
rotary lever, spring return,		22	**12T-RF-22**	**KX 9356**	3.19.010E
for panel mounting		30	**12T-RF-30**	**KX 9315**	
pushbutton,		22	**13T-RF-22**	**KX 9357**	3.19.010E
for panel mounting		30	**13T-RF-30**	**KX 9316**	
mushroom pushbutton,		22	**15T-RF-22**	**KX 9358**	3.19.010E
for panel mounting		30	**15T-RF-30**	**KX 9317**	
locking switch,		22	**16T-22**	**KX 9359**	3.19.010E
for panel mounting		30	**16T-30**	**KX 9318**	
rotary switch,		22	**17T-22**	**KX 9360**	3.19.010E
for panel mounting		30	**17T-30**	**KX 9319**	
mushroom switch, EMERGENCY SHUTDOWN,		22	**18T-22**	**KX 9361**	3.19.010E
for panel mounting		30	**18T-30**	**KX 9320**	

A3P035E71AAJ00X

The right to introduce technical modifications is reserved

HOERBIGER-ORIGA GMBH · Südliche Römerstraße 15 · D-86972 Altenstadt · Tel. +49 +8861 221-0 · Fax +49 +8861 221-1305 · E-mail pneu@hoerbiger.de
HOERBIGER-ORIGA GMBH · Industriestr. 8 · D-70794 Filderstadt · Tel. +49 +7158 1703-0 · Fax +49 +7158 64870 · E-mail dmarket@hoerbiger-origa.com
HOERBIGER-ORIGA LTD. · Tewkesbury Industrial Estate · Tewkesbury GL 20 8 ND GB · Tel. +44 1684 85 00 00 · Fax +44 1684 85 05 55
E-mail sales@hoerbiger-origa.com
HOERBIGER-ORIGA Pneumatik GmbH · Dr. Alexander-Schärf-Straße 12 · A-2700 Wiener Neustadt · Tel. +43 +2622 26071-0 · Fax +43 +2622 26071-5
E-mail amarket@hoerbiger-origa.com
HOERBIGER-ORIGA AB · Kungsgatan 10, Box 67 · SE-73622 Kungsör · Tel. +46 227 411 00 · Fax +46 227 411 29 · E-mail semarket@hoerbiger-origa.com
Internet http://www.hoerbiger-origa.com

3/2 Way Valve

G1/8

Actuation: Rotary lever

Series K9

K9 312-1/8

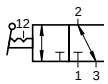

K9 312RF-1/8

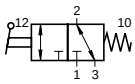

K9 312S-1/8

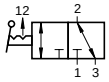

Characteristics to VDI 3290			Pressures quoted as gauge pressure
Characteristics	Symbol	Unit	Description
General Features			
System			Poppet valve
Mounting			2 screws M4
Tube connection			Thread
Port size			G1/8
Weight (mass)		kg	0.11
Installation			In any position
Ambient temperature range	ϑ_{min} ϑ_{max}	°C °C	-10 +55 — Note: When using below freezing point (°C) it is necessary to consult us
Medium temperature range	ϑ_{min} ϑ_{max}	°C °C	+5* +60
Medium			Filtered and lubricated or filtered and unlubricated air
Lubrication			None or oil mist lubrication
Pneumatic Characteristics			
Nominal pressure	p_n	bar	6
Operating pressure range	p_{min} p_{max}	bar bar	0 10
Nominal flow	Q_N	l/min	350
Flow direction			1→2 normally closed 3→2 normally open
Actuation			
Manual control			Direct, rotary lever
Angle of rotation	α		±45° and 90°
Actuating force	F_b	N	4.5

* -10 °C when using dry compressed air

Dimensions (mm)

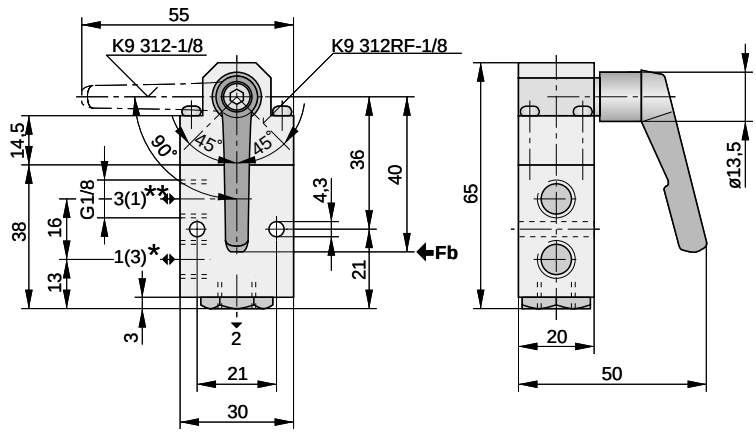

* = P when used as "normally closed"
** = P when used as "normally open"

Non-overlapping poppet valve with low actuating force and short response time.
Applicable as normally closed or normally open valve (see drawing).

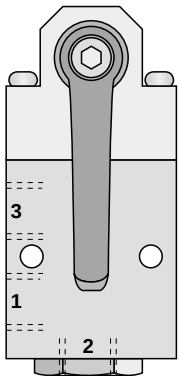

For product group list see 3.19.001E
For data sheets see 3.19.002E-3.19.010E

Order Instructions:	**K9 312-1/8**	**PA 10269** (indexed)
	K9 312S-1/8	**PA 10349** (indexed, secured in both positions)
	K9 312RF-1/8	**PA 10270** (with spring return)

Data Sheet No. 3.19.002E

A1P199E00DX00X

The right to introduce technical modifications is reserved

HOERBIGER ORIGA

3/2 Way Valve

G1/8

Actuation: Pushbutton

Series K9

K9 314RF-1/8

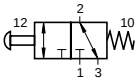

Characteristics to VDI 3290			Pressures quoted as gauge pressure	
Characteristics	Symbol	Unit	Description	
General Features				
System			Poppet valve	
Mounting			2 screws M4	
Tube connection			Thread	
Port size			G1/8	
Weight (mass)		kg	0.075	
Installation			In any position	
Ambient temperature range	ϑ_{min} ϑ_{max}	°C °C	-10 +55	Note: When using below freezing
Medium temperature range	ϑ_{min} ϑ_{max}	°C °C	+5* +60	point (°C) it is necessary to consult us
Medium			Filtered and lubricated or filtered and unlubricated air	
Lubrication			None or oil mist lubrication	
Pneumatic Characteristics				
Nominal pressure	p_n	bar	6	
Operating pressure range	p_{min} p_{max}	bar bar	0 10	
Nominal flow	Q_N	l/min	350	
Flow direction			1→2 normally closed 3→2 normally open	
Actuation				
Manual control			Direct, pushbutton	
Stroke		mm	1.5-3	
Actuating force	F_b	N	25	

* -10 °C when using dry compressed air

Non-overlapping poppet valve with low actuating force and short response time.
Applicable as normally closed or normally open valve (see drawing).

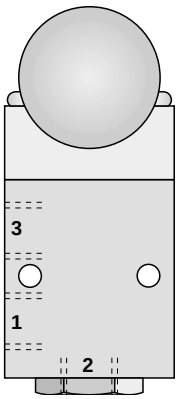

Dimensions (mm)

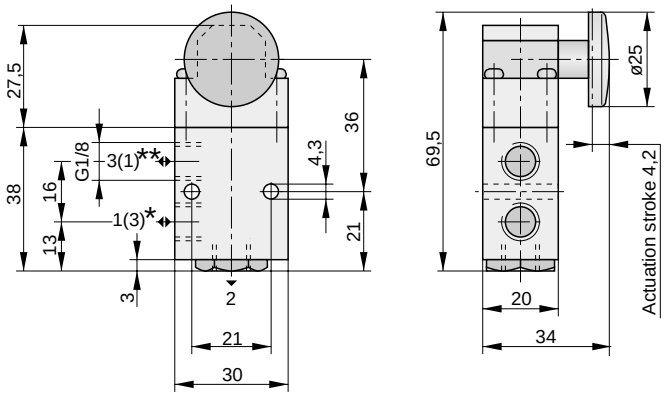

* = P when used as "normally closed"
** = P when used as "normally open"

For product group list see 3.19.001E
For data sheets see 3.19.002E-3.19.010E

Order Instruction: K9 314RF-1/8 PA 10271

Data Sheet No. 3.19.003E

A1P200E00DX00X

The right to introduce technical modifications is reserved

3/2 Way Valve

G1/8

Actuation: Plunger

Series K9

K9 323RF-1/8

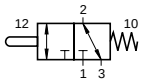

Characteristics to VDI 3290			Pressures quoted as gauge pressure
Characteristics	Symbol	Unit	Description
General Features			
System			Poppet valve
Mounting			2 screws M4
Tube connection			Thread
Port size			G1/8
Weight (mass)		kg	0.05
Installation			In any position
Ambient temperature range	ϑ_{min} ϑ_{max}	°C °C	-10 +55 — Note: When using below freezing point (°C) it is necessary to consult us
Medium temperature range	ϑ_{min} ϑ_{max}	°C °C	+5* +60
Medium			Filtered and lubricated or filtered and unlubricated air
Lubrication			None or oil mist lubrication
Pneumatic Characteristics			
Nominal pressure	p_n	bar	6
Operating pressure range	p_{min} p_{max}	bar bar	0 10
Nominal flow	Q_N	l/min	350
Flow direction			1→2 normally closed 3→2 normally open
Actuation			
Mechanical			Direct, plunger
Stroke		mm	1.5-3
Actuating force	F_b	N	32

* -10 °C when using dry compressed air

Dimensions (mm)

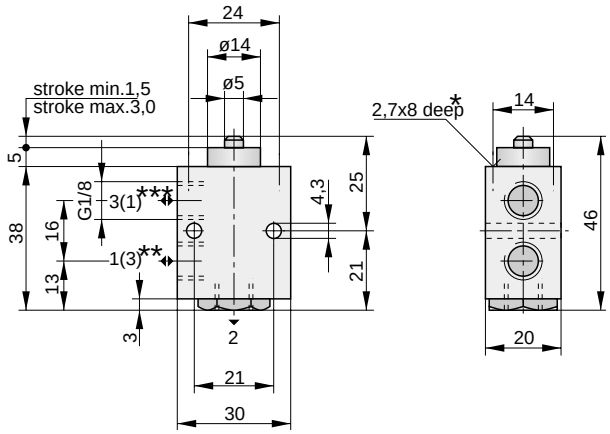

* Use self-tapping screw CM 3x.. DIN 7500
** = P when used as "normally closed"
*** = P when used as "normally open"

Non-overlapping poppet valve with low actuating force and short response time.
Applicable as normally closed or normally open valve (see drawing).

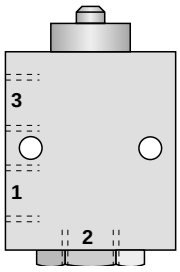

For product group list see 3.19.001E
For data sheets see 3.19.002E-3.19.010E

Order Instruction: K9 323RF-1/8 PA 10235

Data Sheet No. 3.19.004E

A1P198E00DX00X

The right to introduce technical modifications is reserved

3/2 Way Valve

G1/8

Actuation: Cam operation

Series K9

K9 321RF-1/8

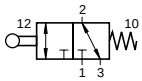

Characteristics to VDI 3290			Pressures quoted as gauge pressure
Characteristics	Symbol	Unit	Description
General Features			
System			Poppet valve
Mounting			2 screws M4
Tube connection			Thread
Port size			G1/8
Weight (mass)		kg	0.07
Installation			In any position
Ambient temperature range	ϑ_{min} ϑ_{max}	°C °C	-10 +55
Medium temperature range	ϑ_{min} ϑ_{max}	°C °C	+5* +60
Medium			Filtered and lubricated or filtered and unlubricated air
Lubrication			None or oil mist lubrication
Pneumatic Characteristics			
Nominal pressure	p_n	bar	6
Operating pressure range	p_{min} p_{max}	bar bar	0 10
Nominal flow	Q_N	l/min	350
Flow direction			1→2 normally closed 3→2 normally open
Actuation			
Mechanical			Direct, cam operated
Stroke		mm	1.5-3
Actuating force	F_b	N	11

Note: When using below freezing point (°C) it is necessary to consult us

* -10 °C when using dry compressed air

Dimensions (mm)

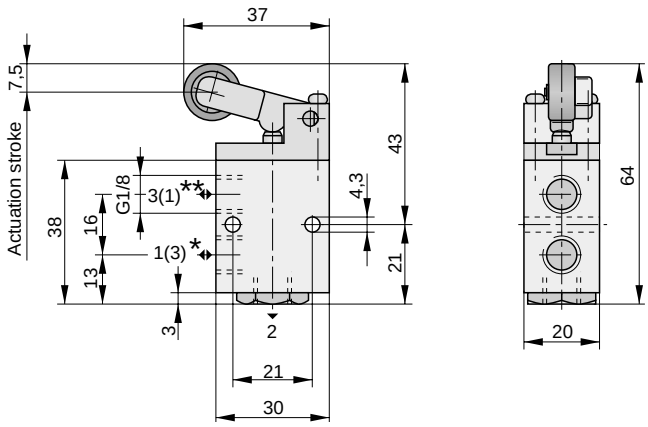

* = P when used as "normally closed"
** = P when used as "normally open"

Non-overlapping poppet valve with low actuating force and short response time.
Applicable as normally closed or normally open valve (see drawing).

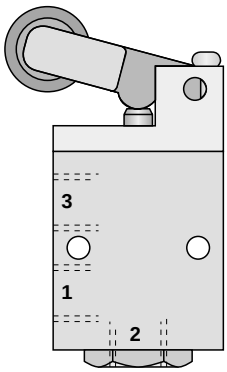

For product group list see 3.19.001E
For data sheets see 3.19.002E-3.19.010E

Order Instruction: K9 321RF-1/8 PA 10272

Data Sheet No. 3.19.005E

A1P201E00DX00X

The right to introduce technical modifications is reserved

3/2 Way Valve

G1/8

Actuation:
Toggle cam operated

Series K9

K9 324RF-1/8

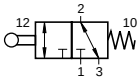

Non-overlapping poppet valve with low actuating force and short response time.
Applicable as normally closed or normally open valve (see drawing).

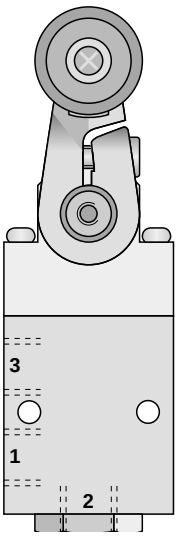

Characteristics to VDI 3290 — Pressures quoted as gauge pressure

Characteristics	Symbol	Unit	Description
General Features			
System			Poppet valve
Mounting			2 screws M4
Tube connection			Thread
Port size			G1/8
Weight (mass)		kg	0.12
Installation			In any position
Ambient temperature range	ϑ_{min} ϑ_{max}	°C °C	-10 +55 — Note: When using below freezing point (°C) it is necessary to consult us
Medium temperature range	ϑ_{min} ϑ_{max}	°C °C	+5* +60
Medium			Filtered and lubricated or filtered and unlubricated air
Lubrication			None or oil mist lubrication
Pneumatic Characteristics			
Nominal pressure	p_n	bar	6
Operating pressure range	p_{min} p_{max}	bar bar	0 10
Nominal flow	Q_N	l/min	350
Flow direction			1→2 normally closed 3→2 normally open
Actuation			
Mechanical			Direct, toggle cam operated
Stroke		mm	1.5-3
Angle of rotation	α		±40°
Actuating force	F_b	N	5

* -10 °C when using dry compressed air

Dimensions (mm)

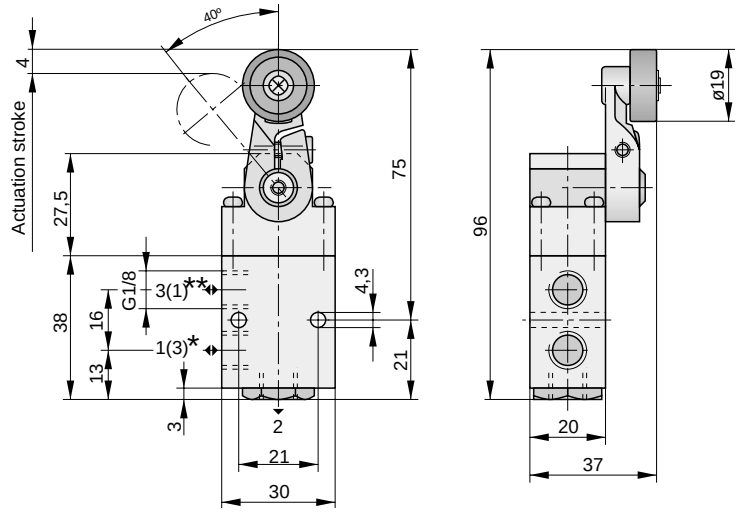

* = P when used as "normally closed"
** = P when used as "normally open"

For product group list see 3.19.001E
For data sheets see 3.19.002E-3.19.010E

Order Instruction: **K9 324RF-1/8 PA 10273**

Data Sheet No. 3.19.006E

A1P202E00DX00X

The right to introduce technical modifications is reserved

3/2 Way Valve

G1/8

Actuation:
Cam operated, free cam left
Cam operated, free cam right

Series K9

K9 325RF-1/8
K9 326RF-1/8

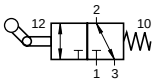

Characteristics to VDI 3290			Pressures quoted as gauge pressure
Characteristics	Symbol	Unit	Description
General Features			
System			Poppet valve
Mounting			2 screws M4
Tube connection			Thread
Port size			G1/8
Weight (mass)		kg	0.12
Installation			In any position
Ambient temperature range	ϑ_{min} ϑ_{max}	°C °C	-10 +55
Medium temperature range	ϑ_{min} ϑ_{max}	°C °C	+5* +60
Medium			Filtered and lubricated or filtered and unlubricated air
Lubrication			None or oil mist lubrication
Pneumatic Characteristics			
Nominal pressure	p_n	bar	6
Operating pressure range	p_{min} p_{max}	bar bar	0 10
Nominal flow	Q_N	l/min	350
Flow direction			1→2 normally closed 3→2 normally open
Actuation			
Mechanical			Direct cam operated, free cam left cam operated, free cam right
Stroke		mm	1.5-3
Angle of rotation	α		±40°
Actuating force	F_b	N	5

Note: When using below freezing point (°C) it is necessary to consult us

* -10 °C when using dry compressed air

Non-overlapping poppet valve with low actuating force and short response time.
Applicable as normally closed or normally open valve (see drawing).

Dimensions (mm)

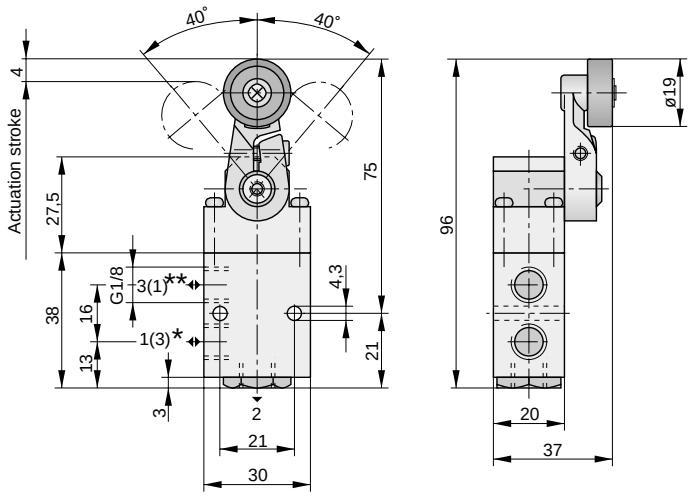

* = P when used as "normally closed"
** = P when used as "normally open"

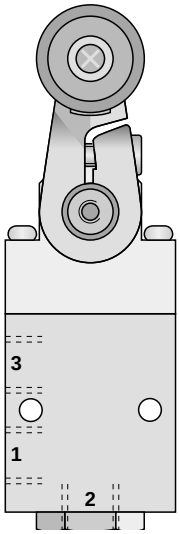

For product group list see 3.19.001E
For data sheets see 3.19.002E-3.19.010E

Order Instructions: **K9 325RF-1/8** **PA 10274** (free cam left)
K9 326RF-1/8 **PA 10275** (free cam right)

Data Sheet No. 3.19.007E

A1P203E00DX00X

The right to introduce technical modifications is reserved

HOERBIGER ORIGA

3/2 Way Valve

G1/8

Actuation: Pivoted lever

Series K9

K9 329RF-1/8

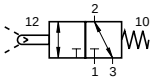

Characteristics to VDI 3290			Pressures quoted as gauge pressure
Characteristics	Symbol	Unit	Description
General Features			
System			Poppet valve
Mounting			2 screws M4
Tube connection			Thread
Port size			G1/8
Weight (mass)		kg	0.115
Installation			In any position
Ambient temperature range	ϑ_{min} ϑ_{max}	°C °C	-10 +55
Medium temperature range	ϑ_{min} ϑ_{max}	°C °C	+5* +60
Medium			Filtered and lubricated or filtered and unlubricated air
Lubrication			None or oil mist lubrication
Pneumatic Characteristics			
Nominal pressure	p_n	bar	6
Operating pressure range	p_{min} p_{max}	bar bar	0 10
Nominal flow	Q_N	l/min	350
Flow direction			1→2 normally closed 3→2 normally open
Actuation			
Mechanical			Direct, pivoted lever
Angle of rotation	α		±40°
Actuating force	F_b	N	2 at a distance of 100 mm from fulcrum

Note: When using below freezing point (°C) it is necessary to consult us

* -10 °C when using dry compressed air

Non-overlapping poppet valve with low actuating force and short response time.
Applicable as normally closed or normally open valve (see drawing).

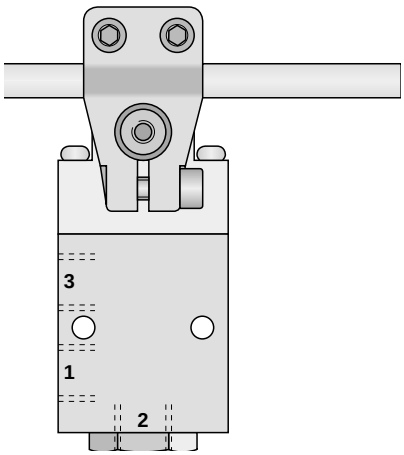

Dimensions (mm)

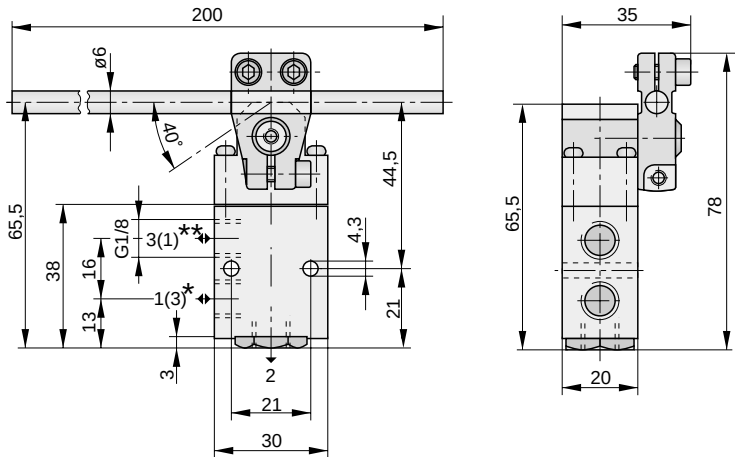

* = P when used as "normally closed"
** = P when used as "normally open"

For product group list see 3.19.001E
For data sheets see 3.19.002E-3.19.010E

Order Instruction: K9 329RF-1/8 PA 10276

Data Sheet No. 3.19.008E

A1P206E00DX00X

The right to introduce technical modifications is reserved

3/2 Way Valve

G1/8

Actuation: Pedal

Series K9

K9 331RF-1/8

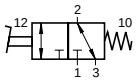

Characteristics to VDI 3290			Pressures quoted as gauge pressure
Characteristics	Symbol	Unit	Description
General Features			
System			Poppet valve
Mounting			2 screws M6
Tube connection			Thread
Port size			G1/8
Weight (mass)		kg	0.8
Installation			In any position
Ambient temperature range	ϑ_{min} ϑ_{max}	°C °C	-10 +55 — Note: When using below freezing point (°C) it is necessary to consult us
Medium temperature range	ϑ_{min} ϑ_{max}	°C °C	+5* +60
Medium			Filtered and lubricated or filtered and unlubricated air
Lubrication			None or oil mist lubrication
Pneumatic Characteristics			
Nominal pressure	p_n	bar	6
Operating pressure range	p_{min} p_{max}	bar bar	0 10
Nominal flow	Q_N	l/min	350
Flow direction			1→2 normally closed 3→2 normally open
Actuation			
Manual control			Direct, pedal
Stroke		mm	1.5-3
Actuating force	F_b	N	12

* -10 °C when using dry compressed air

Non-overlapping poppet valve with low actuating force and short response time.
Applicable as normally closed or normally open valve (see drawing).

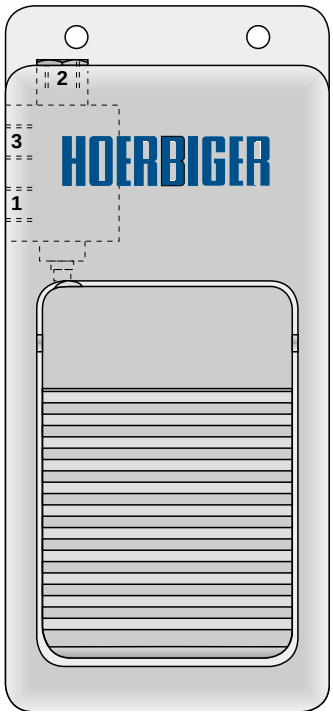

A1P204E00DX00X

The right to introduce technical modifications is reserved

For product group list see 3.19.001E
For data sheets see 3.19.002E-3.19.010E

HOERBIGER ORIGA

Dimensions (mm)

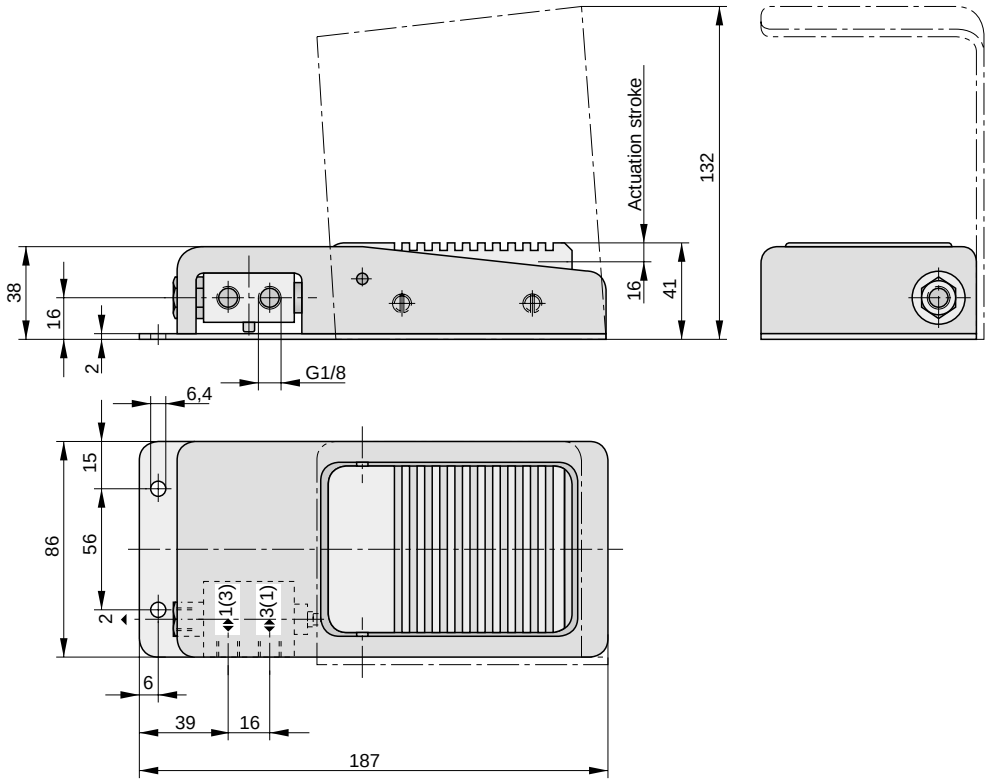

Order Instruction: K9 331RF-1/8 PA 10277

3/2 Way Valve

G1/8

for panel mounting

Actuation:
Interchangeable
(see drawings)

Series K9

K9 390RF-1/8

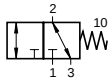

Characteristics to VDI 3290			Pressures quoted as gauge pressure
Characteristics	Symbol	Unit	Description
General Features			
System			Poppet valve
Mounting			Panel mounting, actuators correspond to internationally standardized mounting diameters to DIN43696
Tube connection			Thread
Port size			G1/8
Weight (mass)		kg	0.06
Installation			In any position
Ambient temperature range	ϑ_{min} ϑ_{max}	°C °C	-10 +55 — Note: When using below freezing point (°C) it is necessary to consult us
Medium temperature range	ϑ_{min} ϑ_{max}	°C °C	+5* +60
Medium			Filtered and lubricated or filtered and unlubricated compressed air
Lubrication			None or oil mist lubrication
Pneumatic Characteristics			
Nominal pressure	p_n	bar	6
Operating pressure range	p_{min} p_{max}	bar bar	0 10
Nominal flow	Q_N	l/min	350
Flow direction			1→2 normally closed 3→2 normally open
Actuation			
Manual control			Direct
Stroke		mm	1.5-3
Actuating force	F_b	N	35

* -10 °C when using dry air

Non-overlapping poppet valve with low actuating force and short response time.
Applicable as normally open or normally closed valve.
The actuators are interchangeable and when used with an adapter they can be mounted in any position.

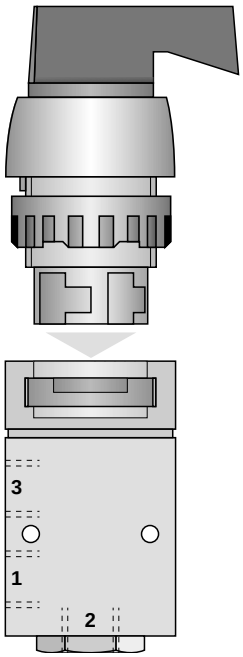

A1P368E00DX00X

The right to introduce technical modifications is reserved

For product group list see 3.19.001E
For data sheets see 3.19.002E-3.19.010E

Dimensions (mm) Basic Valve

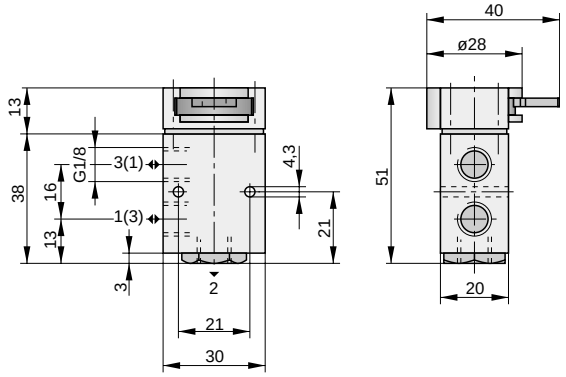

Dimensions (mm) Mounting Hole

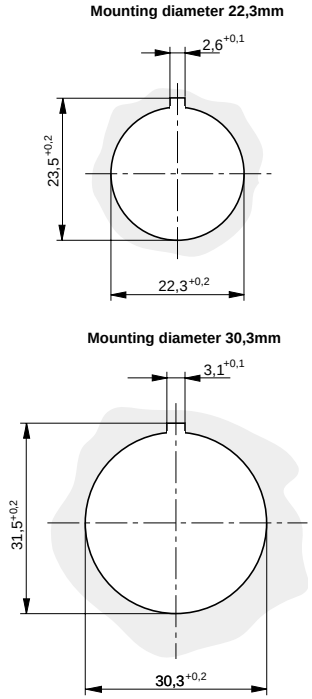

Dimensions (mm) Rotary Lever, Indexed
Type: 12T-22, 12T-30

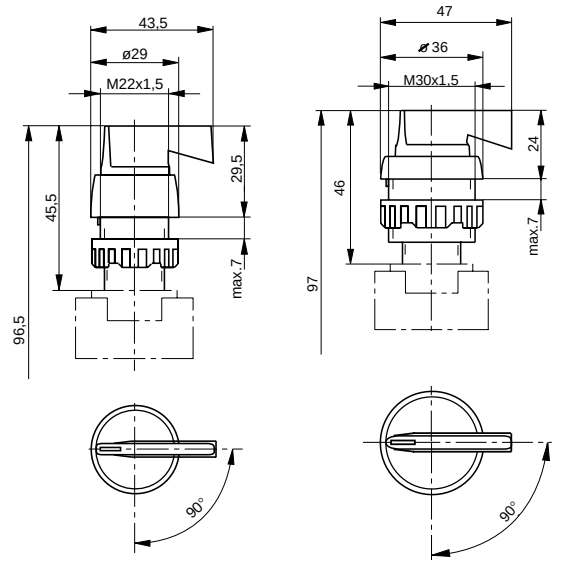

Dimensions (mm) Rotary Lever with Spring Return
Type: 12T-RF-22, 12T-RF-30

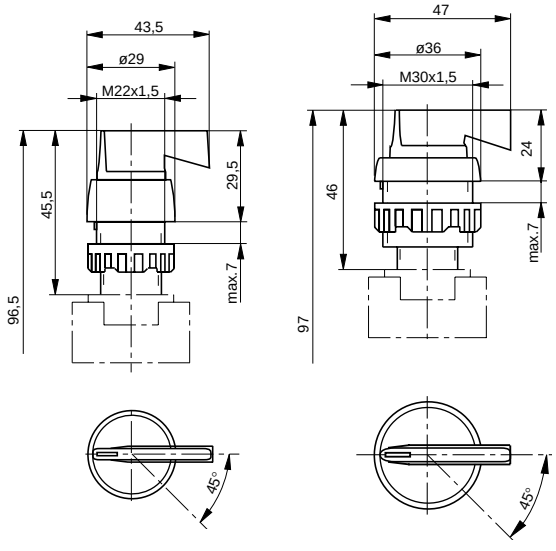

Dimensions (mm) Pushbutton
Type: 13T-RF-22, 13T-RF-30

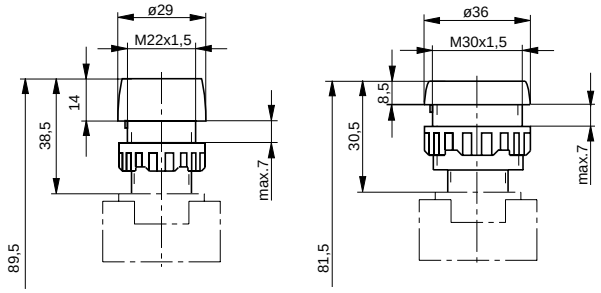

Dimensions (mm) Mushroom pushbutton
Type: 15T-RF-22, 15T-RF-30

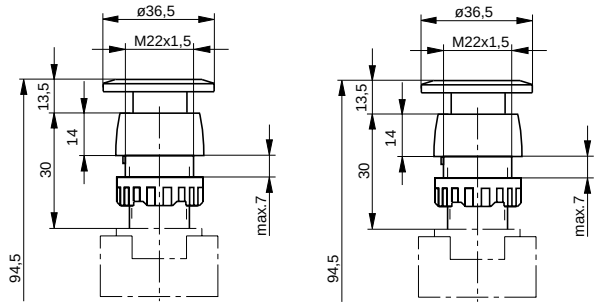

Dimensions (mm) Locking Switch
Type: 16T-22, 16T-30

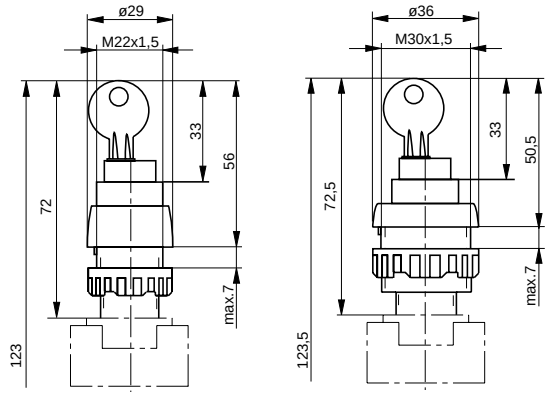

Dimensions (mm) Rotary Switch
Type: 17T-22, 17T-30

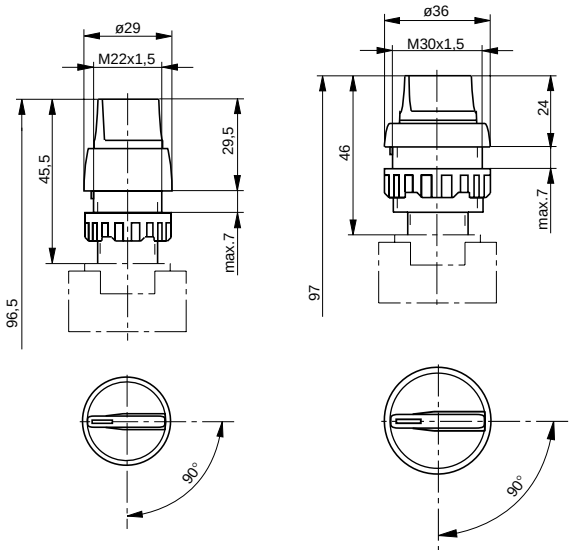

Dimensions (mm) Mushroom Switch
EMERGENCY SHUTDOWN, Type: 18T-22, 18T-30

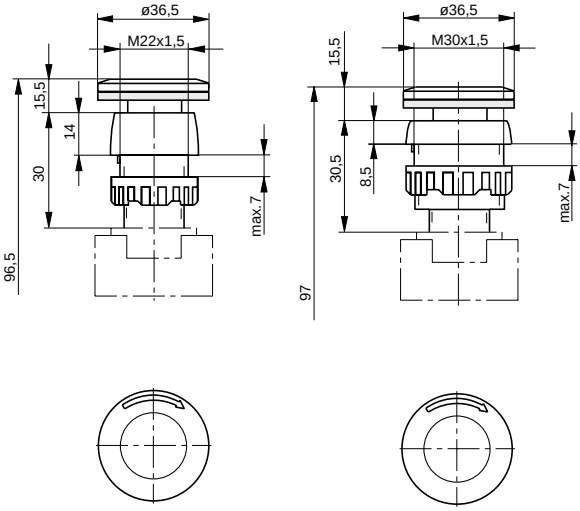

Order Instructions

Description	Symbol	Mounting Ø (mm)	Order Instructions Type	Order No.
Basic valve for panel mounting	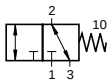		**K9 390RF-1/8**	**PA 10278**
Rotary lever, indexed		22	**12T-22**	**KX 9355**
		30	**12T-30**	**KX 9314**
Rotary lever with spring return		22	**12T-RF-22**	**KX 9356**
		30	**12T-RF-30**	**KX 9315**
Pushbutton		22	**13T-RF-22**	**KX 9357**
		30	**13T-RF-30**	**KX 9316**
Mushroom pushbutton		22	**15T-RF-22**	**KX 9358**
		30	**15T-RF-30**	**KX 9317**
Locking switch		22	**16T-22**	**KX 9359**
		30	**16T-30**	**KX 9318**
Rotary switch		22	**17T-22**	**KX 9360**
		30	**17T-30**	**KX 9319**
Mushroom switch EMERGENCY SHUTDOWN		22	**18T-22**	**KX 9361**
		30	**18T-30**	**KX 9320**

PNEUMATIC
GROUP

4/3 WAY VALVES
G1/8
SERIES DRS

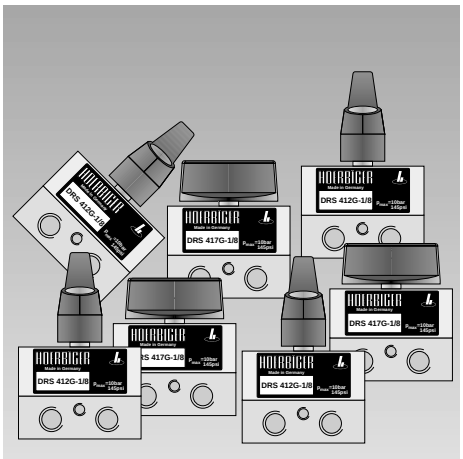

HOERBIGER
ORIGA

Actuation	Symbol	Order Instructions Type	Order No.	Data Sheet No.
Rotary lever	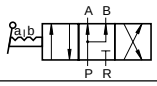	**DRS 412 B-1/8**	**PA 10267**	3.35.010E
	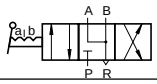	**DRS 412 E-1/8**	**PA 10266**	3.35.010E
	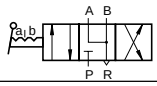	**DRS 412G-1/8**	**PA 10268**	3.35.010E
Rotary switch	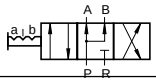	**DRS 417 B-1/8**	**PA 10264**	3.35.011E
	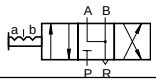	**DRS 417 E-1/8**	**PA 10263**	3.35.011E
	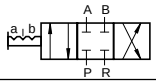	**DRS 417 G-1/8**	**PA 10265**	3.35.011E

A3P029E42AA J00X

The right to introduce technical modifications is reserved

HOERBIGER-ORIGA GMBH · Südliche Römerstraße 15 · D-86972 Altenstadt · Tel. +49 +8861 221-0 · Fax +49 +8861 221-1305 · E-mail preu@hoerbiger.de
HOERBIGER-ORIGA GMBH · Industriestr. 8 · D-70794 Filderstadt · Tel. +49 +7158 1703-0 · Fax +49 +7158 64870 · E-mail dmarket@hoerbiger-origa.com
HOERBIGER-ORIGA LTD. · Tewkesbury Industrial Estate · Tewkesbury GL 20 8 ND GB · Tel. +44 1684 85 00 00 · Fax +44 1684 85 05 55
E-mail sales@hoerbiger-origa.com
HOERBIGER-ORIGA Pneumatik GmbH · Dr. Alexander-Schärf-Straße 12 · A-2700 Wiener Neustadt · Tel. +43 +2622 26071-0 · Fax +43 +2622 26071-5
E-mail amarket@hoerbiger-origa.com
HOERBIGER-ORIGA AB · Kungsgatan 10, Box 67 · SE-73622 Kungsör · Tel. +46 227 411 00 · Fax +46 227 411 29 · E-mail semarket@hoerbiger-origa.com
Internet http://www.hoerbiger-origa.com

4/3 Way Valve

G1/8

Actuation: Rotary lever

Series DRS

DRS 412 .-06

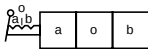

Characteristics to VDI 3290			Pressures quoted as gauge pressure
Characteristics	Symbol	Unit	Description
General Features			
System			Flat slide valve without automatic return to neutral position
Mounting			2 screws M4
Tube connection			Thread
Port size			P, A, B: G1/8 R: M5
Weight (mass)		kg	0.5
Installation			In any position
Ambient temperature range	ϑ_{min} ϑ_{max}	°C °C	-10 +55
Medium temperature range	ϑ_{min} ϑ_{max}	°C °C	-10 +60
Medium			Filtered compressed air
Lubrication			Oil mist lubrication compatible with Buna N
Pneumatic Characteristics			
Nominal pressure	p_n	bar	6
Operating pressure range	p_{min} p_{max}	bar bar	0 10
Nominal flow	Q_N	l/min	350
Actuation			
Manual control			Direct

Note: When using below freezing point (°C) it is necessary to consult us

Actuating Force (N)

Type	Actuating force (N)
DRS 412 E-06	ca. 6
DRS 412 B-06	ca. 6
DRS 412 G-06	ca. 6

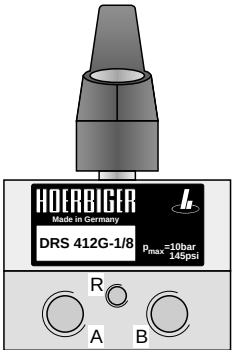

For product group list see 3.35.001E

Data Sheet No. 3.35.010E-1

A1P162E00DX00X

The right to introduce technical modifications is reserved

HOERBIGER ORIGA

Dimensions (mm)

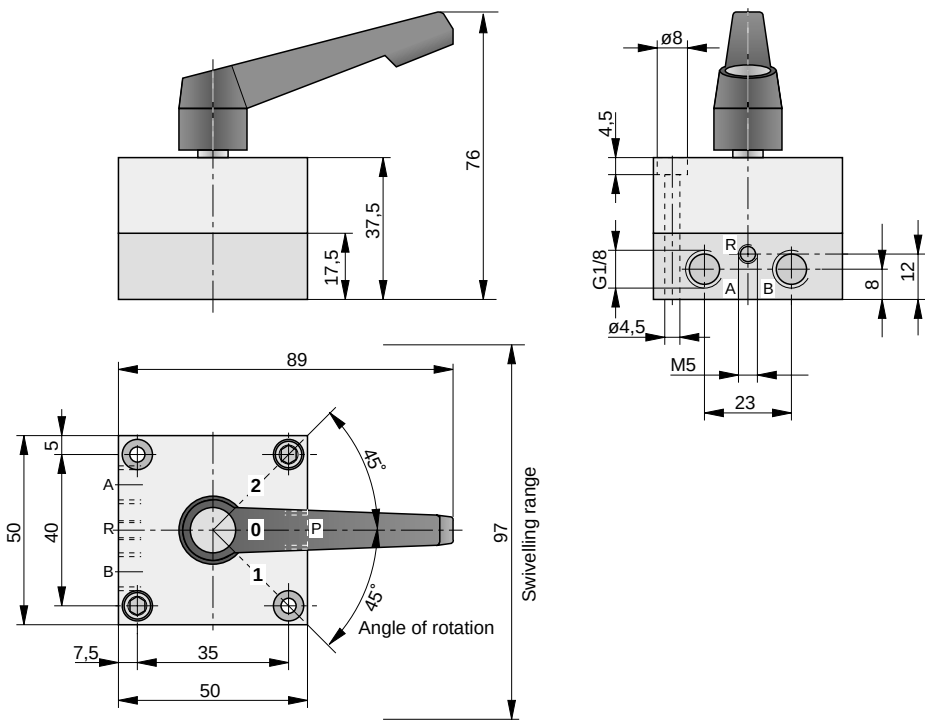

Order Instructions

Actuation	Middle position function	Symbol	Order Instructions Type	Order No.
Rotary lever	Middle position pressurized	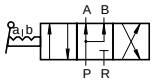	**DRS 412 B-06**	**PA 10267**
Rotary lever	Middle position exhausted	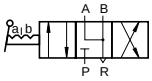	**DRS 412 E-06**	**PA 10266**
Rotary lever	Middle position closed	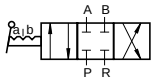	**DRS 412 G-06**	**PA 10268**

4/3 Way Valve

G1/8

Actuation: Rotary switch

Series DRS

DRS 417 .-06

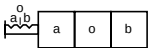

Characteristics to VDI 3290			Pressures quoted as gauge pressure
Characteristics	Symbol	Unit	Description
General Features			
System			Flat slide valve without automatic return to neutral position
Mounting			2 screws M4
Tube connection			Thread
Port size			P, A, B: G1/8 R: M5
Weight (mass)		kg	0.5
Installation			In any position
Ambient temperature range	ϑ_{min} ϑ_{max}	°C °C	-10 +55
Medium temperature range	ϑ_{min} ϑ_{max}	°C °C	-10 +60
Medium			Filtered compressed air
Lubrication			Oil mist lubrication compatible with Buna N
Pneumatic Characteristics			
Nominal pressure	p_n	bar	6
Operating pressure range	p_{min} p_{max}	bar bar	0 10
Nominal flow	Q_N	l/min	350
Actuation			
Manual control			Direct

Note: When using below freezing point (°C) it is necessary to consult us

Actuating Force (N)

Type	Actuating force (N)
DRS 417 E-06	ca. 6
DRS 417 B-06	ca. 6
DRS 417 G-06	ca. 6

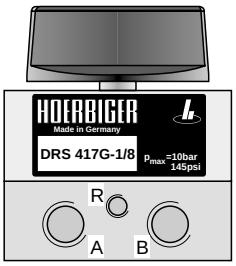

For product group list see 3.35.001E

Data Sheet No. 3.35.011E-1

A1P163E00DX00X

The right to introduce technical modifications is reserved

HOERBIGER ORIGA

Dimensions (mm)

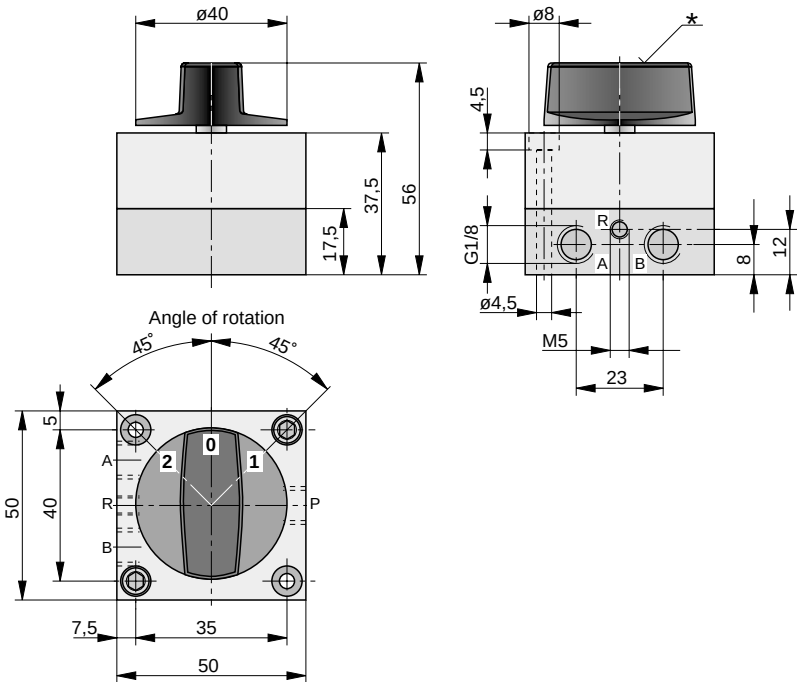

* After removing the cover and loosening the mounting screws, the rotary switch is infinitely variable.

Order Instructions

Actuation	Middle position function	Symbol	Order Instruction Type	Order No.
Rotary switch	Middle position pressurized	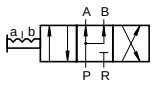	**DRS 417B-06**	**PA 10264**
Rotary switch	Middle position exhausted	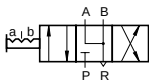	**DRS 417E-06**	**PA 10263**
Rotary switch	Middle position closed	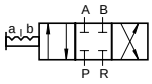	**DRS 417G-06**	**PA 10265**

PNEUMATIC
GROUP

3/2, 5/2 AND 5/3 WAY VALVES
VALVE ISLANDS
SPECIAL VALVES
SERIES S9 (V9) - G1/8

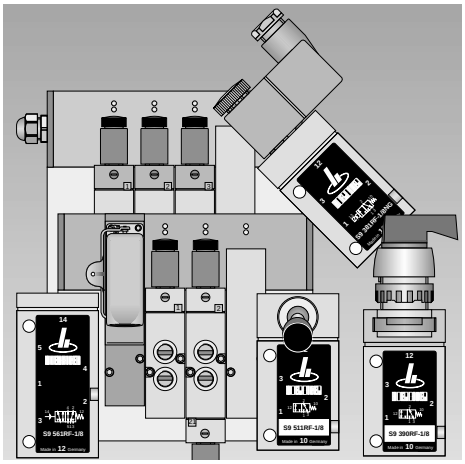

HOERBIGER
ORIGA

3/2 Way Valves - Standard Versions					
Actuation	Symbol	Mounting Ø (mm)	Order Instructions Type	Order No.	Data Sheet No.
Hand lever, indexed	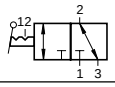		**S9 311-1/8**	**PA 10293**	3.42.002E
Hand lever, spring return	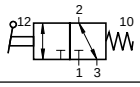		**S9 311RF-1/8**	**PA 10294**	3.42.002E
Pneumatic by permanent signal	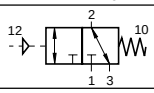		**S9 361RF-1/8**	**PA 10295**	3.42.004E
Pneumatic by impulse	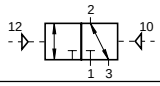		**S9 361-1/8**	**PA 10296**	3.42.004E
Basic valve with adapter for panel mounting	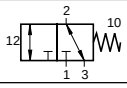		**S9 390RF-1/8**	**PA 10307**	3.42.007E
Rotary lever, indexed		22	**12T-22**	**KX 9355**	3.42.007E
		30	**12T-30**	**KX 9314**	
Rotary lever with spring return		22	**12T-RF-22**	**KX 9356**	3.42.007E
		30	**12T-RF-30**	**KX 9315**	
Pushbutton		22	**13T-RF-22**	**KX 9357**	3.42.007E
		30	**13T-RF-30**	**KX 9316**	
Mushroom pushbutton		22	**15T-RF-22**	**KX 9358**	3.42.007E
		30	**15T-RF-30**	**KX 9317**	
Locking switch		22	**16T-22**	**KX 9359**	3.42.007E
		30	**16T-30**	**KX 9318**	
Rotary switch		22	**17T-22**	**KX 9360**	3.42.007E
		30	**17T-30**	**KX 9319**	
Mushroom pushbutton EMERGENCY-OFF		22	**18T-22**	**KX 9361**	3.42.007E
		30	**18T-30**	**KX 9320**	
Electrical by permanent signal	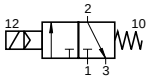		**S9 381RF-1/8-NG-..**	**PA 10297-..33**	3.42.005E
	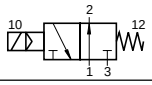		**S9 381RF-1/8-NO-..**	**PA 10298-..33**	3.42.005E
with external pilot air	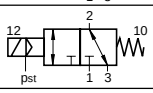		**S9 381S-RF-1/8-..**	**PA 10300-..33**	3.42.005E
Electrical by impulse	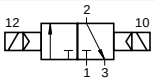		**S9 381-1/8-..**	**PA 10299-..33**	3.42.005E
with external pilot air	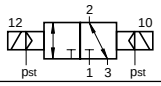		**S9 381S-1/8-..**	**PA 10301-..33**	3.42.005E
Electrical by permanent signal	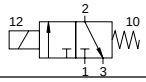	NW 1,3	**V9 381RF-1/8-NG-..**	**PA 10362-..33**	3.42.310E
		NW 2,5	**V9 381RF-1/8-NG-..**	**PA 10369-..33**	3.42.330E
with manual override	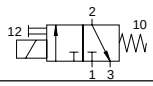	NW 1,3	**V9 381H-RF-1/8-NG-..**	**PA 10363-..33**	3.42.310E
		NW 2,5	**V9 381H-RF-1/8-NG-..**	**PA 10370-..33**	3.42.330E

Solenoid version	Nominal voltage	Applicable for	Key code
Standard version	220 V/50 (60) Hz	110 V=	61
	24 V=	60 V/50 (60) Hz	02
Low wattage coil version	24 V=		13
	220 V/50 (60) Hz		69
Ex-proof version *	24 V=		48
	220 V/50 (60) Hz		98

* For explosion-proof versions different technical requirements apply, according to Declaration of Conformity

Further voltages available on request.

5/2 Way Valves - Standard Versions					
Actuation	Symbol	Mounting Ø (mm)	Order Instructions Type	Order No.	Data Sheet No.
Hand lever, indexed	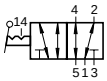		**S9 511-1/8**	**PA 10308**	3.42.050E
Handhebel, spring return	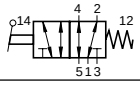		**S9 511RF-1/8**	**PA 10309**	3.42.050E
Pneumatic by permanent signal	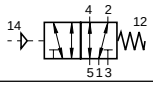		**S9 561RF-1/8**	**PA 10310**	3.42.052E
Pneumatic by impulse	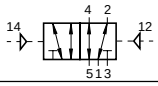		**S9 561-1/8**	**PA 10311**	3.42.052E
Basic valve with adapter for panel mounting	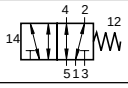		**S9 590RF-1/8**	**PA 10320**	3.42.055E
Rotary lever , indexed		22	**12T-22**	**KX 9355**	3.42.055E
		30	**12T-30**	**KX 9314**	
Rotary lever with spring return		22	**12T-RF-22**	**KX 9356**	3.42.055E
		30	**12T-RF-30**	**KX 9315**	
Pushbutton		22	**13T-RF-22**	**KX 9357**	3.42.055E
		30	**13T-RF-30**	**KX 9316**	
Mushroom pushbutton		22	**15T-RF-22**	**KX 9358**	3.42.055E
		30	**15T-RF-30**	**KX 9317**	
Locking switch		22	**16T-22**	**KX 9359**	3.42.055E
		30	**16T-30**	**KX 9318**	
Rotary switch		22	**17T-22**	**KX 9360**	3.42.055E
		30	**17T-30**	**KX 9319**	
Mushroom pushbutton EMERGENCY-OFF		22	**18T-22**	**KX 9361**	3.42.055E
		30	**18T-30**	**KX 9320**	
Electrical by permanent signal	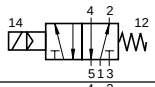		**S9 581RF-1/8-..**	**PA 10312-..33**	3.42.053E
with external pilot air	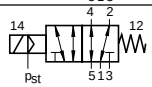		**S9 581S-RF-1/8-..**	**PA 10314-..33**	3.42.053E
Electrical by impulse	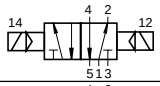		**S9 581-1/8-..**	**PA 10313-..33**	3.42.053E
with external pilot air	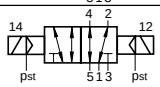		**S9 581S-1/8-..**	**PA 10315-..33**	3.42.053E

Solenoid version	Nominal voltage	Applicable for	Key code
Standard version	220 V/50 (60) Hz	110 V =	61
	24 V =	60 V/50 (60) Hz	02
Low wattage version	24 V =		13
	220 V/50 (60) Hz		69
Ex-proof version *	24 V =		48
	220 V/50 (60) Hz		98

* For explosion-proof versions different technical requirements apply, according to Declaration of Conformity

Further voltages available on request.

5/3 Way Valves - Standard Versions				
Actuation	Symbol	Order Instructions Type	Order No.	Data Sheet No.
Hand lever, indexed in 3 operating positions	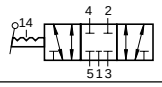	**S9 511G-1/8**	**PA 10321**	3.42.100E
	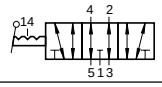	**S9 511E-1/8**	**PA 10322**	3.42.100E
	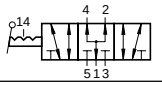	**S9 511B-1/8**	**PA 10323**	3.42.100E
Hand lever, spring return to middle position	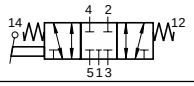	**S9 511RFG-1/8**	**PA 10324**	3.42.100E
	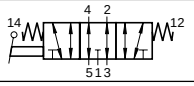	**S9 511RFE-1/8**	**PA 10325**	3.42.100E
	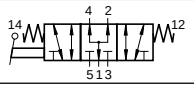	**S9 511RFB-1/8**	**PA 10326**	3.42.100E
Hand lever, secured in 3 operating positions	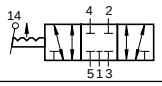	**S9 511SG-1/8**	**PA 10327**	3.42.101E
	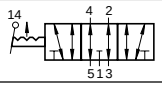	**S9 511SE-1/8**	**PA 10328**	3.42.101E
	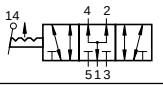	**S9 511SB-1/8**	**PA 10329**	3.42.101E
Pneumatic by permanent signal, spring return to middle position	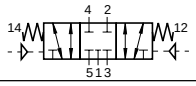	**S9 561RFG-1/8**	**PA 10330**	3.42.102E
	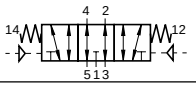	**S9 561RFE-1/8**	**PA 10331**	3.42.102E
	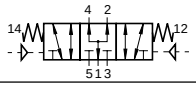	**S9 561RFB-1/8**	**PA 10332**	3.42.102E
Electrical by permanent signal, spring return to middle position	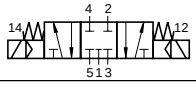	**S9 581RFG-1/8-..**	**PA 10333-..33**	3.42.103E
	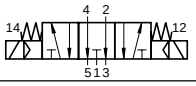	**S9 581RFE-1/8-..**	**PA 10334-..33**	3.42.103E
	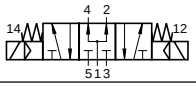	**S9 581RFB-1/8-..**	**PA 10335-..33**	3.42.103E

Solenoid version	Nominal voltage	Applicable for	Key code
Standard version	220 V/50 (60) Hz	110 V=	61
	24 V=	60 V/50 (60) Hz	02
Low wattage version	24 V=		13
	220 V/50 (60) Hz		69
Ex-proof version *	24 V=		48
	220 V/50 (60) Hz		98

* For explosion-proof versions different technical requirements apply, according to Declaration of Conformity

Further voltages available on request.

Special Valves					
Description	Actuation	Symbol	Order Instructions Type	Order No.	Data Sheet No.
5/2 Way Valve with NAMUR connections	Electrical, permanent signal	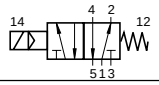	**S9 581RF-1/8-SO-.. ***	**PD 34143-..33**	3.42.500E
	Electrical, Impulse	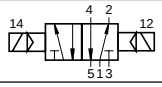	**S9 581-1/8-SO-.. ***	**PD 34984-..33**	3.42.500E
5/2 Way Valve for 2 hand safety operation	Pneumatic	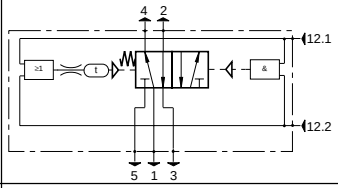	**S8 563/65RF--1/8-SO**	**PD 37673**	3.42.546E
Pressure Switch	Pneumatic positiv	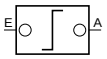	**ZVP+06**	**20-529842**	3.42.590E
	Pneumatic negativ	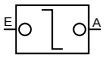	**ZVP-06**	**20-529481**	3.42.590E

* For voltage data see key code on page 3.42.001-4

Valve Combinations with Logic Elements - 3/2, 5/2 and 5/3 Way Valves

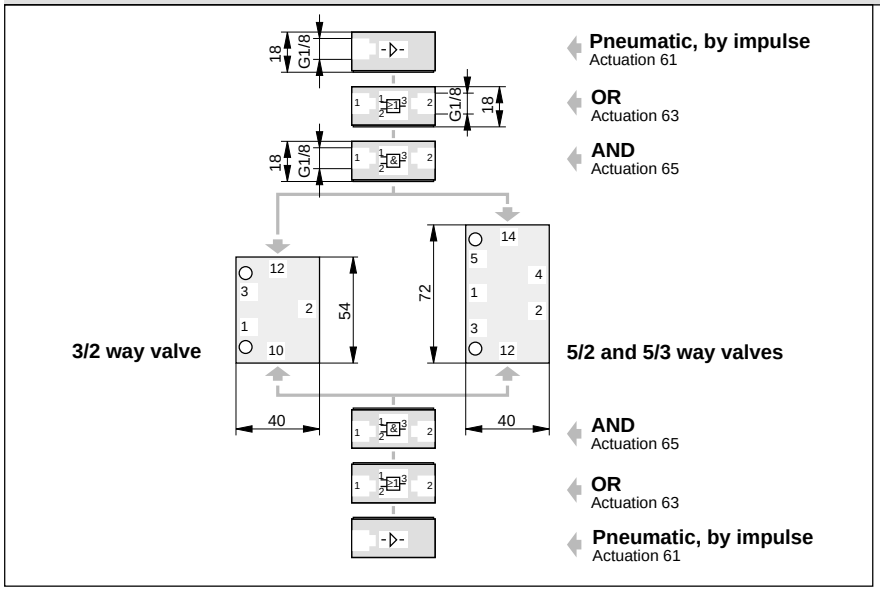

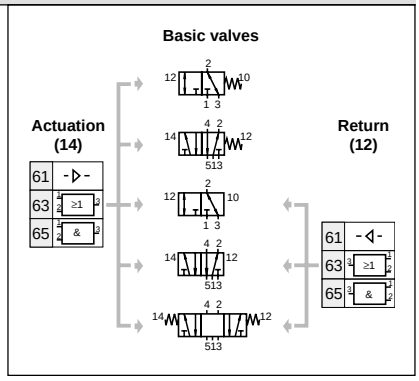

Order Instructions	S9	5	63 / 65	RFG	1/8	Ordering Example

Version	
3	3 way valve
5	5 way valve

Middle position function (only with 5/3 way valves)	
RFG	closed
RFE	vented
RFB	pressurized

Actuation (14)	
61	pneumatic
63	OR
65	AND

Return (12)	
RF	spring return
61	pneumatic
63	OR
65	AND

For P-supply manifolds, see 3.42.450E
For RPS manifolds, see 3.42.455E

Ordering Example:
Valve island with fieldbus connection,
8 fold
equipped with:
1 bistable 5/2 valves S9 581-1/8
7 monostable 5/2 valves S9 581RF-1/8

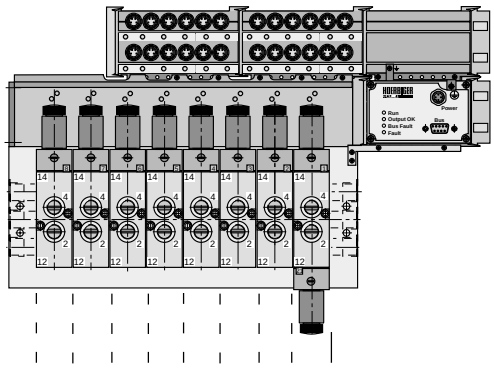

	Order No.							Electr. connection		Internal Bus-expansion	No. of Valves		Valve position												Input module	Number of inputs		Channel divider	Position of channel divider	
													1	2	3	4	5	6	7	8	9	10	11	12						
Ordering example	P	A	1	0	3	8	1	D	P		0	8	M	M	M	M	M	M	M	J										

4 | 6 | 8 | 10 | 12

even number of
valve positions only

Important: Please specify the code for the desired valve types

Input Modules	
K	Pins IP20
S	Connector M8 IP65
04-08-12	Number of inputs
16-20-24	
28-32	

Dual Pressure Operation	
J	with channel divider in port 1 (P)
01 – 11	Position of channel divider to valve position

Valve Island – Sizes	
PA 10381	Type: IM20-1/8 Connections: G1/8 –valve ports G1/4 – base plate

Electrical Connection	
Multipole Version	
DS	with Sub-D connector
HI	with industry connector
Fieldbus Version	
DP	Profibus DP
IS	Interbus S
CO	CAN Open
IB	Internal Bus

Internal Bus Expansion	
J	RIO-IF Module

Valve Positions	
04	up to 4 valves
06	5 and 6 valves
08	7 and 8 valves
10	9 and 10 valves
12	11 and 12 valves
14	13 and 14 valves
16	15 and 16 valves

Ordering Code for Valves and Blanking Plates

Code	Symbol	Description	Data Sheet
A	–	Blanking plate on valve position	For further informations, please refer to the special Data Sheets
M		5/2 way solenoid valve, permanent signal with spring return Type: S9 581RF-..	
J	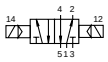	5/2 way solenoid valve, Impulse version Type: S9 581-..	
G	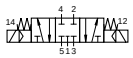	5/3 way solenoid valve, spring return to middle position, middle position closed Type: S9 581RFG-..	
B		5/3 way solenoid valve, spring return to middle position, middle position pressurised Type: S9 581RFB-..	
E		5/3 way solenoid valve, spring return to middle position, middle position vented Type: S9 581RFE-...	

3/2 Way Valve

G1/8

Actuation: Hand lever

Series S9

S9 311-1/8

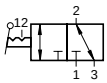

S9 311RF-1/8

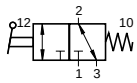

Characteristics to VDI 3290			Pressures quoted as gauge pressure	
Characteristics	Symbol	Unit	Description	
General Features				
Type			Spool valve	
Mounting			2 screws M5	
Tube connection			Thread	
Port size			G1/8; 7.4 deep	
Weight (mass)		kg	0.162	
Installation			In any position	
Ambient temperature range	ϑ_{min} ϑ_{max}	°C °C	-10 +60	Note: When using below freezing point (°C) it ist necessary to consult us
Medium temperature range	ϑ_{min} ϑ_{max}	°C °C	-10 +70	
Medium			Filtered compressed air	
Lubrication			With or without oil mist lubrication [1)]	
Pneumatic Characteristics				
Nominal pressure	p_n	bar	6	
Operating pressure range	p_{min} p_{max}	bar bar	0 10	
Nominal flow	Q_N	l/min	450	
Actuation				
Manual control			Direct	
Stroke		mm	4.5	
Actuation force	F_b	N	Type S9 311-1/8: 7 Type S9 311RF-1/8: 10	

[1)] We recommend the use of mineral oil type VG 32 to ISO 3448

Dimensions (mm)

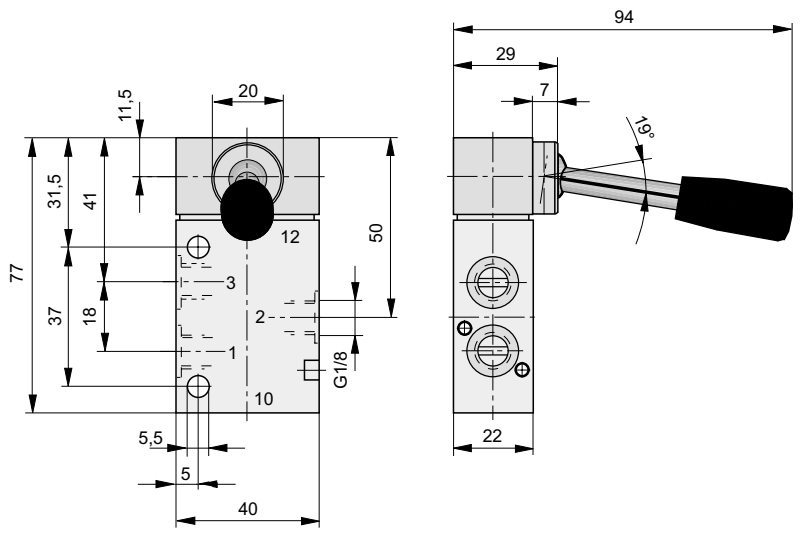

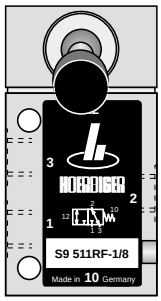

For product group list see 3.42.001E

Order Instructions:
S9 311-1/8 **PA 10293** (both switch positions indexed)
S9 311RF-1/8 **PA 10294** (with spring return)

Data Sheet No. 3.42.002E

A1P364E00DX00X

The right to introduce technical modifications is reserved

HOERBIGER ORIGA

3/2 Way Valve

G1/8

Actuation:
Pneumatic
- by permanent signal
- by impulse

Series S9

S9 361-1/8

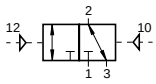

S9 361RF-1/8

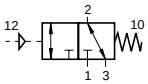

Characteristics to VDI 3290 — Pressures quoted as gauge pressure

Characteristics	Symbol	Unit	Description	
General Features				
Type			Spool Valve	
Mounting			2 screws M5 (M3)	
Tube connection			Thread	
Port size			G1/8; 7.4 deep	
Weight (mass)		kg	0.137 - permanent signal version 0.147 - impulse version	
Installation			In any position	
Ambient temperature range	ϑ_{min} ϑ_{max}	°C °C	-10 +60	Note: When using below freezing
Medium temperature range	ϑ_{min} ϑ_{max}	°C °C	-10 +70	point (°C) it is necessary to consult us.
Medium			Filtered compressed air	
Lubrication			With or without oil mist lubrication[1)]	
Pneumatic Characteristics				
Nominal pressure	p_n	bar	6	
Operating pressure range	p_{min} p_{max}	bar bar	0 10	
Nominal flow	Q_N	l/min	450	
Actuation				
Pneumatic			Direct	
Actuation pressure range	$p_{st\,min}$ $p_{st\,max}$	bar bar	2 10	permanent signal version
	$p_{st\,min}$ $p_{st\,max}$	bar bar	1.5 10	impulse version

[1)] We recommend the use of mineral oil type VG 32 to ISO 3448

Dimensions (mm)

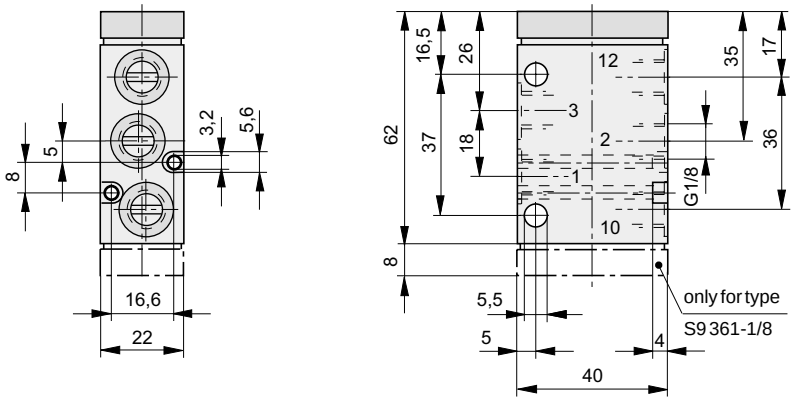

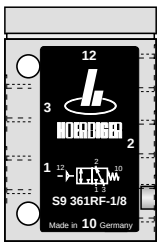

For product group list see 3.42.001E

Order Instructions:
S9 361-1/8 **PA 10296** (impulse)
S8 361RF-1/8 **PA 10295** (permanent signal, spring return)

Data Sheet No. 3.42.004E

A1P365E00DX00X

The right to introduce technical modifications is reserved

3/2 Way Valve

G1/8

Actuation:
Electrically pilot operated with standard solenoids
- by permanent signal
- by impulse

Series S9

S9 381.-1/8

Characteristics to VDI 3290			Pressures quoted as gauge pressure	
Characteristics	Symbol	Unit	Description	
General Features				
Type			Spool valve	
Mounting			2 screws M6 (M3)	
Tube connection			Thread	
Port Size			G 1/8; 7.4 deep	
Weight (mass)		kg	0.247 - permanent signal version 0.382 - impulse version	
Installation			In any position	
Ambient temperature range	ϑ_{min} ϑ_{max}	°C °C	-10 +60	Note: When using below freezing
Medium temperature range	ϑ_{min} ϑ_{max}	°C °C	-10 +70	point (°C) it is necessary to consult us.
Medium			Filtered compressed air	
Lubrication			With or without oil mist lubrication [1]	
Pneumatic Characteristics				
Nominal pressure	p_n	bar	6	
Operating pressure range	p_{min} p_{max}	bar bar	Permanent signal version 2 10	(0-10 Type S)
	p_{min} p_{max}	bar bar	Impulse version 1.5 10	
Nominal flow	Q_N	l/min	450	
Actuation				
Electrical			Pilot operated, pilot operated with external pilot air	
Actuation pressure range (Type S)	$p_{st\ min}$ $p_{st\ max}$	bar bar	2 10	permanent signal version
	$p_{st\ min}$ $p_{st\ max}$	bar bar	1.5 10	impulse version

Voltage				AC	DC
Nominal voltage*	Standard version	U_n	V	220	24
	Low watt. version	U_n	V	220	24
	Ex-proof-version **	U_n	V	220	24
				Further voltages available on request	
Initial power consumption	Standard version		VA (W)	8.5	2.5
	Low watt. version		VA (W)	6.6	2.1
	Ex-proof-version **		VA (W)	5.0	5.1
Continuous consumption	Standard version		VA (W)	6.0	2.5
	Low watt. version		VA (W)	3.9	2.1
	Ex-proof-version **		VA (W)	5.0	5.1
Duty cycle		ED	%	100	
Electrical protection				IP65 to DIN 40050 (with plug)	
Insulating Material				F (Ex-version E) to VDE 0580	
Connection				Plug to DIN 43650 form B[2] Ex-version: cable1200 mm long	

* See Order Instructions for details
** For explosion-proof versions different technical requirements apply, according to Declaration of Conformity
[1] We recommend the use of mineral oil type VG32 to ISO 3448
[2] Plug for low wattage version available in DIN 43650 form A

Variants:
S = with external piloted air

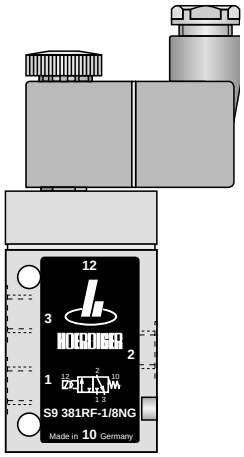

A1P366E00AAJ00X

The right to introduce technical modifications is reserved

For product group list see 3.42.001E

Dimensions (mm)

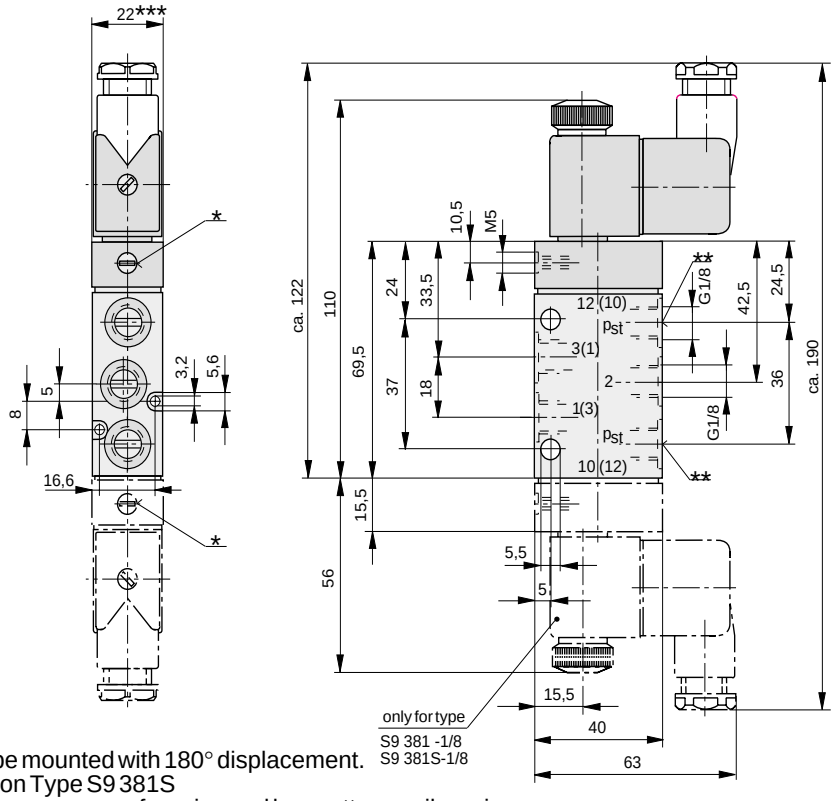

* Manual override can be mounted with 180° displacement.
** Pilot air ports p_{st} - only on Type S9 381S
*** Solenoid width is 30 mm on ex-proof version and low wattage coil version.

Order Instructions

Actuation	Return	Symbol	Order Instructions Type	Order No.
Electrical by permanent signal	Spring return	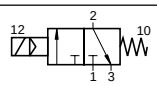	**S9 381RF-1/8-NG-..**	**PA 10297-..33**
		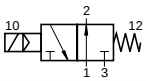	**S9 381RF-1/8-NO-..**	**PA 10298-..33**
with external pilot air	Spring return	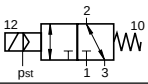	**S9 381S-RF-1/8-..**	**PA 10300-..33**
Electrical by impulse	Electrical by impulse	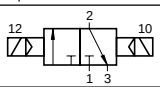	**S9 381-1/8-..**	**PA 10299-..33**
with external pilot air	with external pilot air	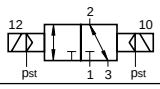	**S9 381S-1/8-..**	**PA 10301-..33**

Solenoid version	Nominal voltage	Applicable for	Key code
Standard version	220 V/50 (60) Hz	110 V=	61
	24V=	60V/50 (60) Hz	02
Low wattage version	24 V=		13
	220 V/50 (60) Hz		69
Ex-proof version *	24 V=		48
	220 V/50 (60) Hz		98

* For explosion-proof versions different technical requirements apply, according to Declaration of Conformity

Further voltages available on request.

3/2 Way Valve

G1/8

for panel mounting

Actuation:
Interchangeable
(see drawing for details)

Series S9

S9 3..T

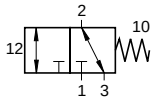

Characteristics to VDI 3290			Pressure quoted as gauge pressure	
Characteristics	Symbol	Unit	Description	
General Features				
Type			Spool valve	
Mounting			Panel mounting: actuators correspond to internationally standardized mounting diameters to DIN 43696	
Tube connection			Thread	
Port size			G1/8; 7.4 deep	
Installation			In any position	
Ambient temperature range	ϑ_{min} ϑ_{max}	°C °C	-10 +60	Note: When using below freezing
Medium temperature range	ϑ_{min} ϑ_{max}	°C °C	-10 +70	point (°C) it ist necessary to consult us.
Medium			Filtered compressed air	
Lubrication			With or without oil mist lubrication [1)]	
Pneumatic Characteristics				
Nominal pressure	p_n	bar	6	
Operating pressure range	p_{min} p_{max}	bar bar	2 10	
Nominal flow	Q_N	l/min	450	
Actuation				
Manual control			Direct	
Stroke		mm	4.5	

[1)] We recommend the use of mineral oil type VG32 to ISO 3448

The actuators for these valves are interchangeable and can be mounted with 180° displacement on the basic valve.
The actuators are not mounted upon delivery.

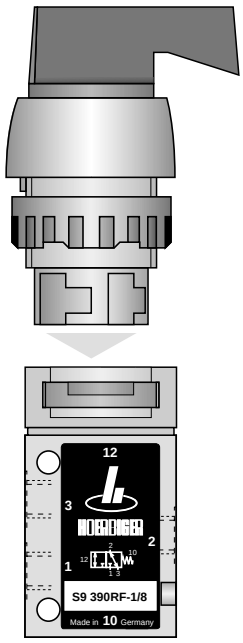

Actuating Forces and Weights		
Type	Actuation force (N, Nm)	Weight (mass) (kg)
S9 312T-1/8	0.3	0.137
S9 312T-RF-1/8	0.3	0.137
S9 313T-RF-1/8	8.0	0.137
S9 315T-RF-1/8	8.0	0.137
S9 316T-1/8	9.0	0.202
S9 317T-1/8	0.3	0.127
S9 318T-1/8	10.0	0.137

A1P368E00DX00X

The right to introduce technical modifications is reserved

HOERBIGER ORIGA

Dimensions (mm) Basic Valve

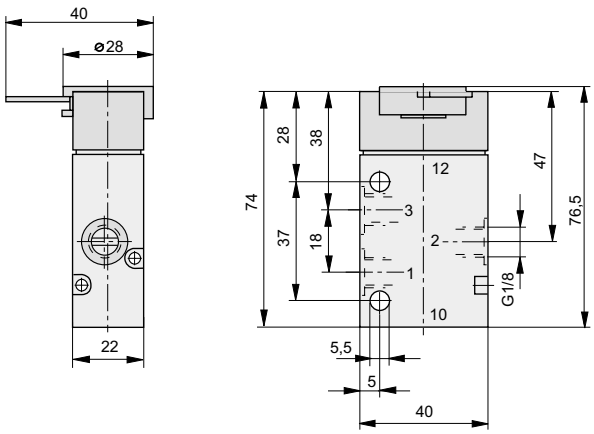

Dimensions (mm) for Mounting Hole

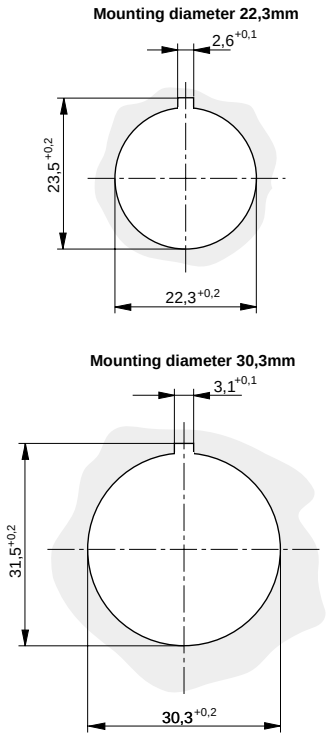

Dimensions (mm) Rotary Lever, Indexed Type: 12T-22, 12T-30,

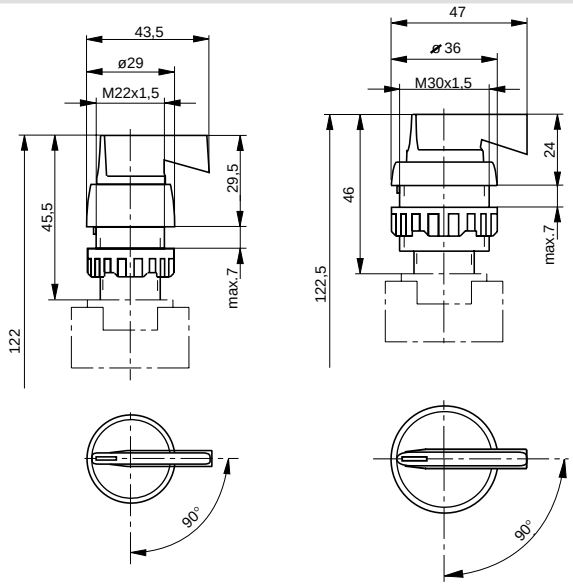

Dimensions (mm) Rotary Lever with Spring Return Type: 12T-RF-22, 12T-RF-30

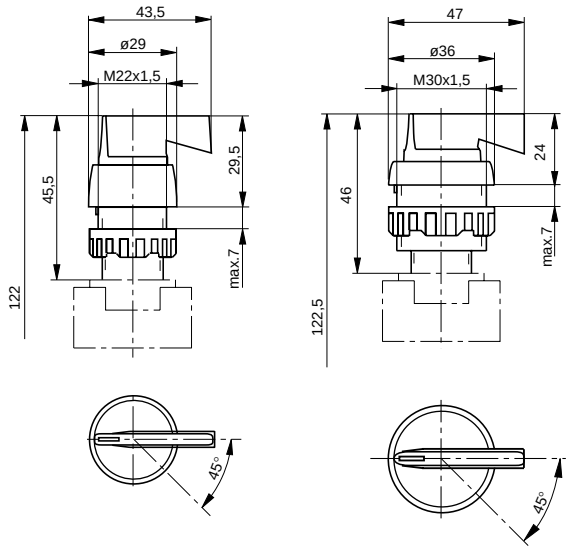

Dimensions (mm) Pushbutton
Type: 13T-RF-22, 13T-RF-30

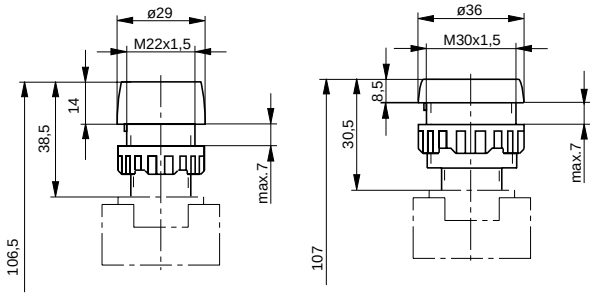

Dimensions (mm) Mushroom Pushbutton
Type: 15T-RF-22, 15T-RF-30

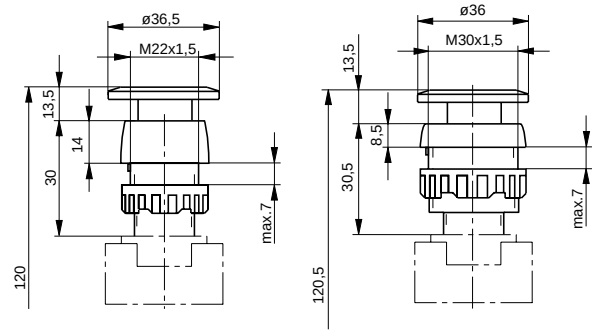

Dimensions (mm) Locking Switch
Type: 16T-22, 16T-30

Dimensions (mm) Rotary Switch
Type: 17T-22, 17T-30

Dimensions (mm) Mushroom Switch
EMERGENCY SHUTDOWN Type: 18T-22, 18T-30

Order Instructions

Description	Symbol	Mounting Ø (mm)	Order Instructions Type	Order No.
Basic valve for panel mounting	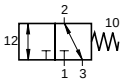		**S9 390RF-1/8**	**PA 10307**
Rotary lever, indexed		22	**12T-22**	**KX 9355**
		30	**12T-30**	**KX 9314**
Rotary lever with spring return		22	**12T-RF-22**	**KX 9356**
		30	**12T-RF-30**	**KX 9315**
Pushbutton		22	**13T-RF-22**	**KX 9357**
		30	**13T-RF-30**	**KX 9316**
Mushroom pushbutton		22	**15T-RF-22**	**KX 9358**
		30	**15T-RF-30**	**KX 9317**
Locking switch		22	**16T-22**	**KX 9359**
		30	**16T-30**	**KX 9318**
Rotary switch		22	**17T-22**	**KX 9360**
		30	**17T-30**	**KX 9319**
Mushroom switch EMERGENCY SHUTDOWN		22	**18T-22**	**KX 9361**
		30	**18T-30**	**KX 9320**

5/2 Way Valve

G1/8

Actuation: Hand lever

Series S9

S9 511-1/8

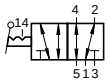

S9 511RF-1/8

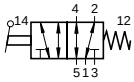

Characteristics to VDI 3290			Pressures quoted as gauge pressure
Characteristics	Symbol	Unit	Description
General Features			
Type			Spool valve
Mounting			2 screws M5
Tube connection			Thread
Port size			G1/8; 7.4 deep
Weight (mass)		kg	0.195
Installation			In any position
Ambient temperature range	ϑ_{min} ϑ_{max}	°C °C	-10 +60
Medium temperature range	ϑ_{min} ϑ_{max}	°C °C	-10 +70
Medium			Filtered compressed air
Lubrication			With or without oil mist lubrication [1)]
Pneumatic Characteristics			
Nominal pressure	p_n	bar	6
Operating pressure range	p_{min} p_{max}	bar bar	0 10
Nominal flow	Q_N	l/min	500
Actuation			
Manual control			Direct
Stroke		mm	4.5
Actuation force	F_b	N	Type S9 511-1/8: 7 Type S9 511RF-1/8: 10

Note: When using below freezing point (°C) it is necessary to consult us.

[1)] We recommend the use of mineral oil type VG32 to ISO 3448

Dimensions (mm)

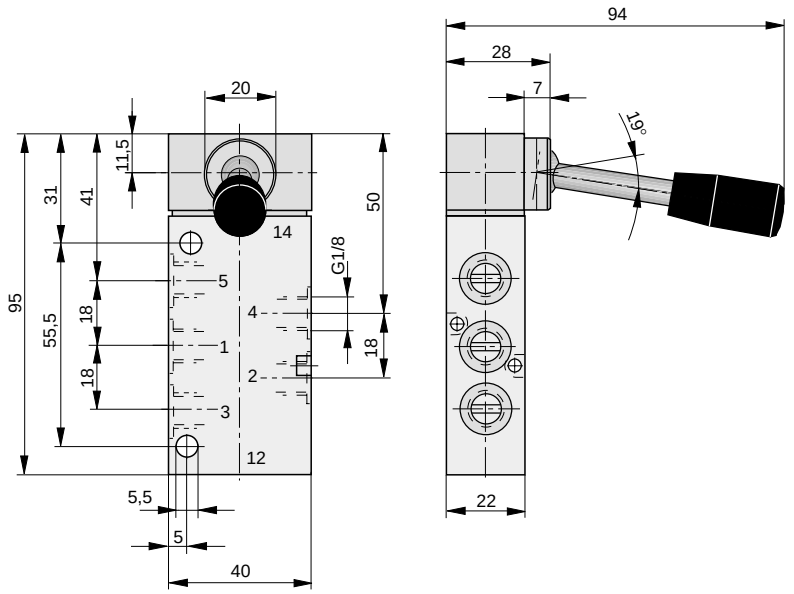

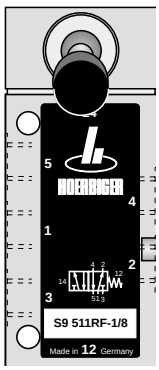

For product group list see 3.42.001E

Order Instructions:
S9 511-1/8 **PA 10308** (both switch positions indexed)
S9 511RF-1/8 **PA 10309** (with spring return)

Data Sheet No. 3.42.050E

A1P369E00DX00X

The right to introduce technical modifications is reserved

HOERBIGER ORIGA

5/2 Way Valve

G1/8

Actuation:
Pneumatic
- by permanent signal
- by impulse

Series S9

S9 561-1/8

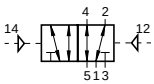

S9 561RF-1/8

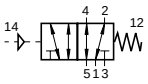

Characteristics to VDI 3290 — Pressures quoted as gauge pressure

Characteristics	Symbol	Unit	Description	
General Features				
Type			Spool valve	
Mounting			2 screws M5 (M3)	
Tube connection			Thread	
Port size			G1/8; 7.4 deep	
Weight (mass)		kg	0.160 - permanent signal version 0.170 - impulse version	
Installation			In any position	
Ambient temperature range	ϑ_{min} ϑ_{max}	°C °C	-10 +60	Note: When using below freezing point (°C) it is necessary to consult us.
Medium temperature range	ϑ_{min} ϑ_{max}	°C °C	-10 +70	
Medium			Filtered compressed air	
Lubrication			With or without oil mist lubrication [1]	
Pneumatic Characteristics				
Nominal pressure	p_n	bar	6	
Operating pressure range	p_{min} p_{max}	bar bar	0 10	
Nominal flow	Q_N	l/min	500	
Actuation				
Pneumatic			Direct	
Actuation pressure range	$p_{st\,min}$ $p_{st\,max}$	bar bar	2 10	permanent signal version
	$p_{st\,min}$ $p_{st\,max}$	bar bar	1.5 10	impulse version

[1] We recommend the use of mineral oil type VG32 to ISO 3448

Dimensions (mm)

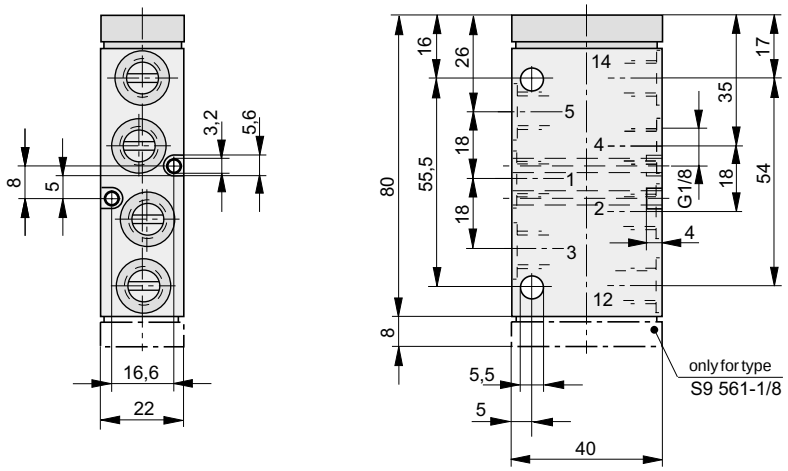

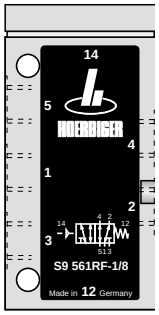

For product group list see 3.42.001E

Order Instructions:
S9 561-1/8 **PA 10311** (impulse)
S8 561RF-1/8 **PA 10310** (permanent signal, spring return)

Data Sheet No. 3.42.052E

A1P370E00DX00X

The right to introduce technical modifications is reserved

5/2 Way Valve

G1/8

Actuation:
Electrically pilot operated with standard solenoids
- by permanent signal
- by impulse

Series S9

S9 581..-1/8

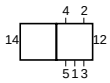

Characteristics to VDI 3290			Pressures quoted as gauge pressure	
Characteristics	Symbol	Unit	Description	
General Features				
Type			Spool valve	
Mounting			2 screws M5 (M3)	
Tube connection			Thread	
Port size			G 1/8; 7.4 deep	
Weight (mass)		kg	0.280 - permanent signal version 0.415 - impulse version	
Installation			In any position	
Ambient temperature range	ϑ_{min} ϑ_{max}	°C °C	-10 +60	Note: When using below freezing
Medium temperature range	ϑ_{min} ϑ_{max}	°C °C	-10 +70	point (°C) it is necessary to consult us.
Medium			Filtered compressed air	
Lubrication			With or without oil mist lubrication [1]	
Pneumatic Characteristics				
Nominal pressure	p_n	bar	6	
Operating pressure range	p_{min} p_{max}	bar bar	Permanent signal version 2 10	(0-10 Type S)
	p_{min} p_{max}	bar bar	Impulse version 1.5 10	
Nominal flow	Q_N	l/min	500	
Actuation				
Electrical			Pilot operated or pilot operated with external pilot air	
Actuation pressure range	$p_{st\,min}$ $p_{st\,max}$	bar bar	2 10	permanent signal version
	$p_{st\,min}$ $p_{st\,max}$	bar bar	1.5 10	impulse version
Voltage			AC	DC
Nominal voltage* — Standard version	U_n	V	220	24
Nominal voltage* — Low watt. version	U_n	V	220	24
Nominal voltage* — Ex-proof version **	U_n	V	220	24
			Further voltages available on request	
Initial power consumption — Standard version		VA (W)	8.5	2.5
Initial power consumption — Low watt. version		VA (W)	6.6	2.1
Initial power consumption — Ex-proof version **		VA (W)	5.0	5.1
Continuous consumption — Standard version		VA (W)	6.0	2.5
Continuous consumption — Low watt. version		VA (W)	3.9	2.1
Continuous consumption — Ex-proof version **		VA (W)	5.0	5.1
Duty cycle	ED	%	100	
Electrical protection			IP65 to DIN 40050 (with plug)	
Insulating material			F (Ex-version E) to VDE 0580	
Connection			Plug to DIN 43650 form B[2] Ex-version: cable 1200 mm long	

* See Order Instructions for details
** For explosion-proof versions different technical requirements apply, according to Declaration of Conformity
[1] We recommend the use of mineral oil type VG32 to ISO 3448
[2] Plug for low wattage version available in DIN 43650 form A

Variants:
S = with external pilot air

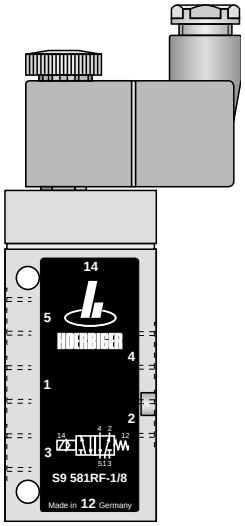

A1P371E00CU40X

The right to introduce technical modifications is reserved

For product group list see 3.42.001E

HOERBIGER ORIGA

Dimensions (mm)

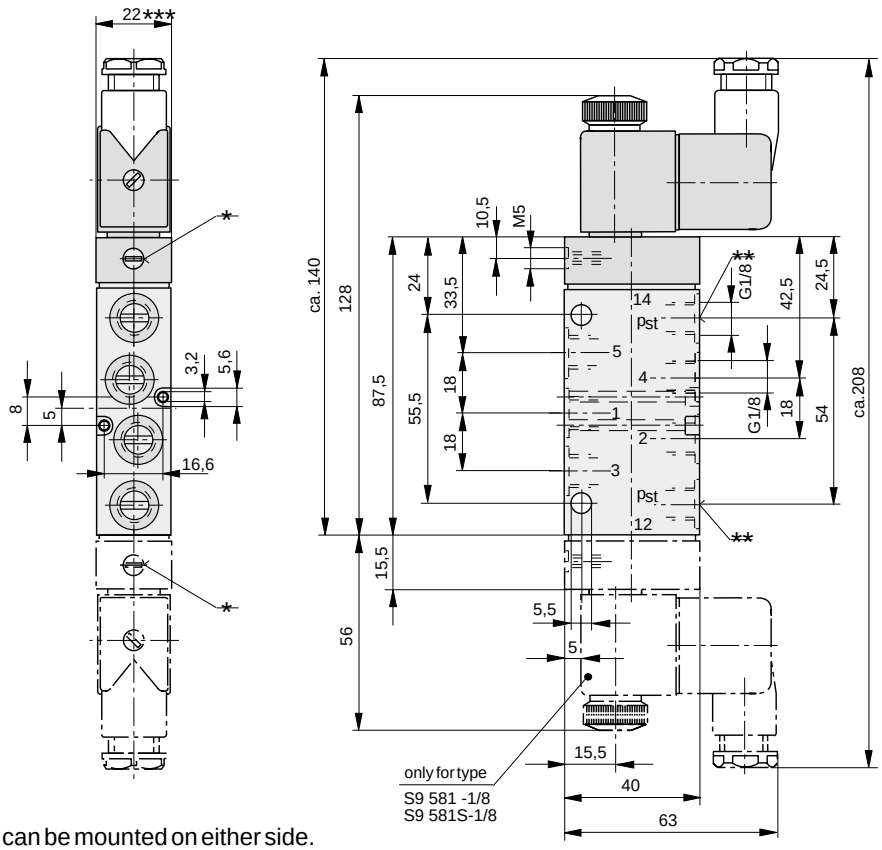

* Manual override can be mounted on either side.
** Pilot air ports p_{st} - only on Type S9 581S
*** Solenoid width is 30 mm on ex-proof version and low wattage coil version.

Order Instructions

Actuation	Return	Symbol	Order Instructions Type	Order No.
Electrical by permanent signal	Spring return	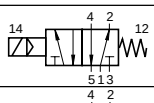	**S9 581RF-1/8-..**	**PA 10312-..33**
with external pilot air	Spring return	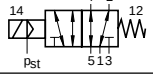	**S9 581S-RF-1/8-..**	**PA 10314-..33**
Electrical by impulse	Electrical by impulse	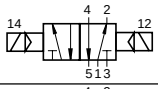	**S9 581-1/8-..**	**PA 10313-..33**
with external pilot air	with external pilot air	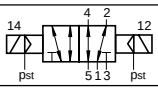	**S9 581S-1/8-..**	**PA 10315-..33**

Solenoid version	Nominal voltage	Applicable for	Key code
Standard version	220 V/50 (60) Hz	110 V=	61
	24 V=	60 V/50 (60) Hz	02
Low wattage coil version	24 V=		13
	220 V/50 (60) Hz		69
Ex-proof version *	24 V=		48
	220 V/50 (60) Hz		98

* For explosion-proof versions different technical requirements apply, according to Declaration of Conformity

Further voltages available on request.

5/2 Way Valve

G1/8

for panel mounting

Actuation:
interchangeable
(see drawings for details)

Series S9

S9 5..T

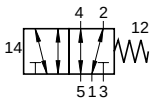

Characteristics to VDI 3290			Pressures quoted as gauge pressure
Characteristics	Symbol	Unit	Description
General Features			
Type			Spool valve
Mounting			Panel mounting, actuators correspond to internationally standardized mounting diameters to DIN 43696
Tube connection			Thread
Port size			G1/8; 7.4 deep
Installation			In any position
Ambient temperature range	ϑ_{min} ϑ_{max}	°C °C	-10 +60
Medium temperature range	ϑ_{min} ϑ_{max}	°C °C	-10 +70
Medium			Filtered compressed air
Lubrication			With or without oil mist lubrication [1)]
Pneumatic Characteristics			
Nominal pressure	p_n	bar	6
Operating pressure range	p_{min} p_{max}	bar bar	2 10
Nominal flow	Q_N	l/min	500
Actuation			
Manual control			Direct
Stroke		mm	4.5

Note: When using below freezing point (°C) it is necessary to consult us.

[1)] We recommend the use of mineral oil type VG32 to ISO 3448

The actuators for these valves are interchangeable and can be mounted with 180° displacement on the basic valve.
Actuators are not mounted upon delivery.

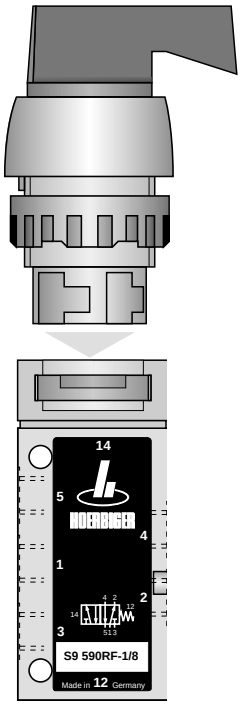

Actuating Forces and Weights		
Type	Actuating force (N, Nm)	Weight (mass) (kg)
S9 512T-1/8	0.3	0.160
S9 512T-RF-1/8	0.3	0.160
S9 513T-RF-1/8	8.0	0.150
S9 515T-RF-1/8	8.0	0.160
S9 516T-1/8	9.0	0.225
S9 517T-1/8	0.3	0.150
S9 518T-1/8	10.0	0.160

Data Sheet No. 3.42.055E-1

A1P373E00DX00X

The right to introduce technical modifications is reserved

HOERBIGER ORIGA

Dimensions (mm) Basic Valve

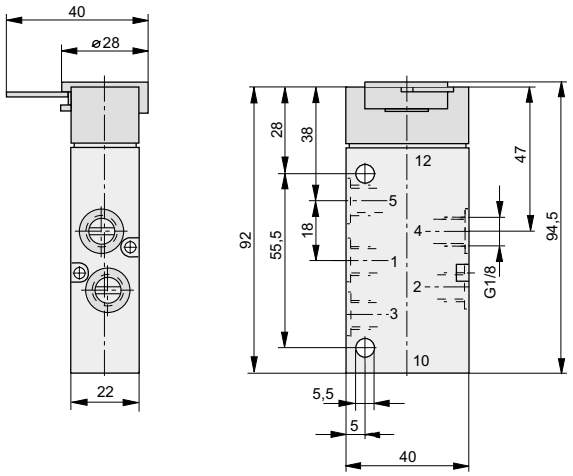

Dimensions (mm) Mounting Hole

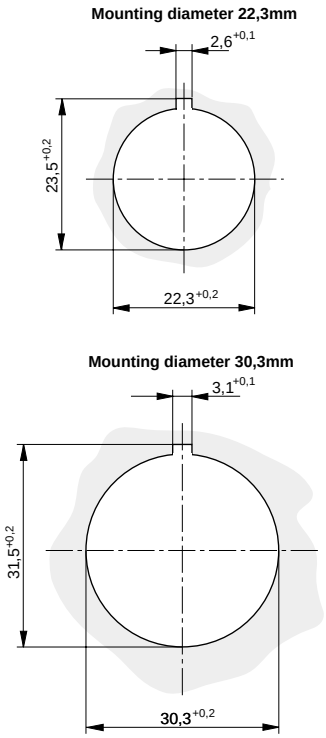

Dimensions (mm) Rotary Lever, Indexed Type: 12T-22, 12T-30,

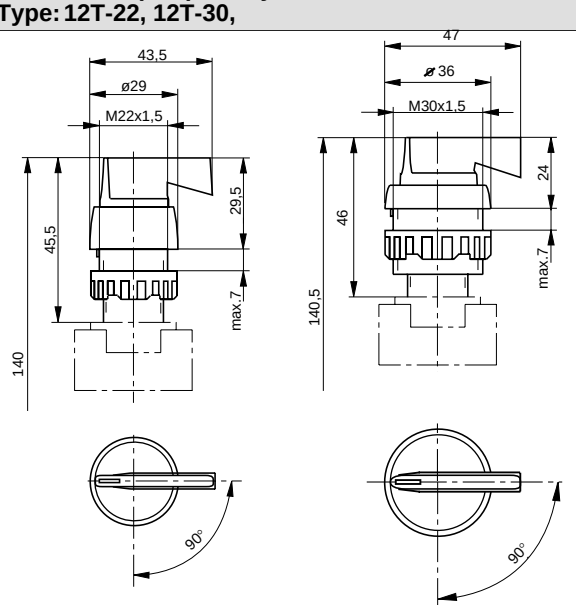

Dimensions (mm) Rotary Lever with Spring Return Type: 12T-RF-22, 12T-RF-30

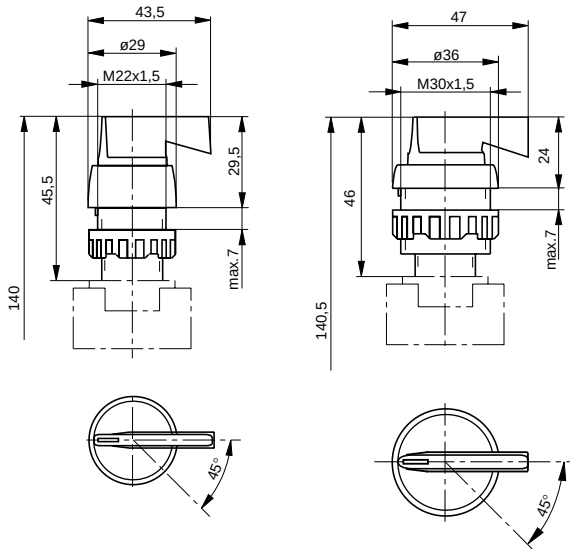

Dimensions (mm) Pushbutton
Type: 13T-RF-22, 13T-RF-30

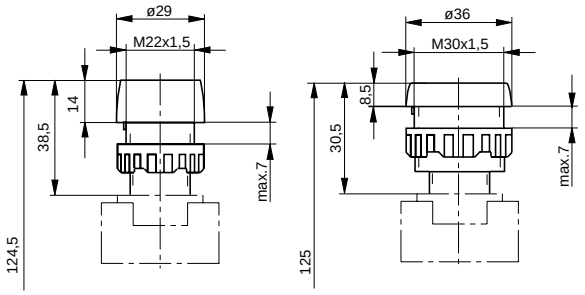

Dimensions (mm) Locking Switch
Type: 16T-22, 16T-30

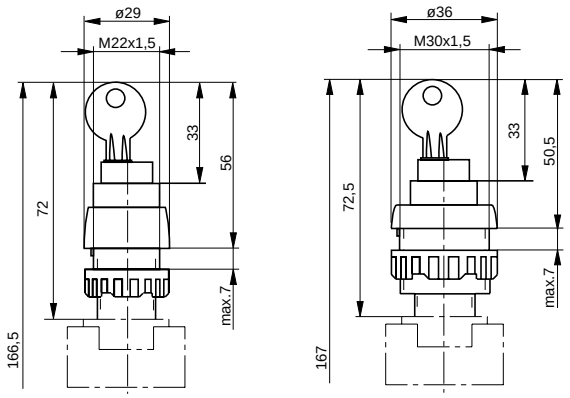

Dimensions (mm) Mushroom Pushbutton
Type: 15T-RF-22, 15T-RF-30

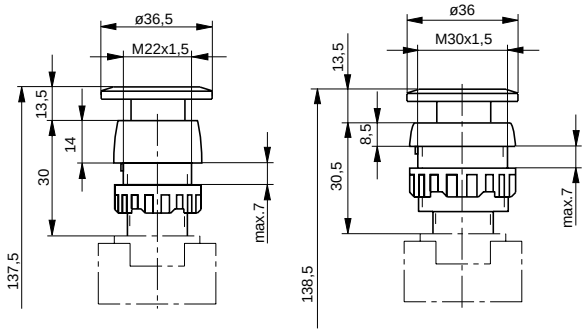

Dimensions (mm) Rotary Switch
Type: 17T-22, 17T-30

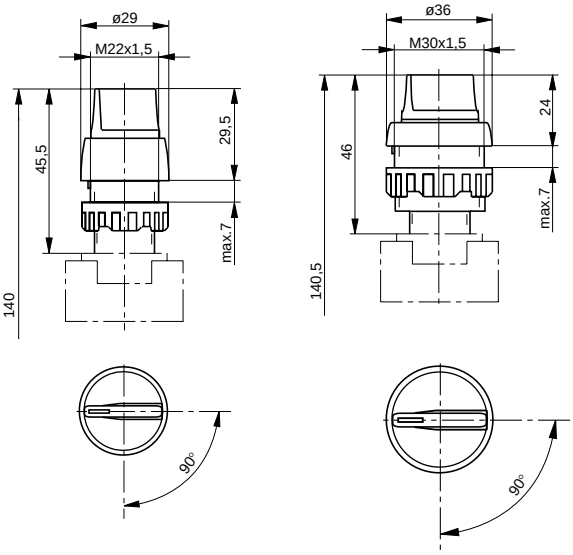

Dimensions (mm) Mushroom Switch EMERGENCY SHUTDOWN Type: 18T-22, 18T-30

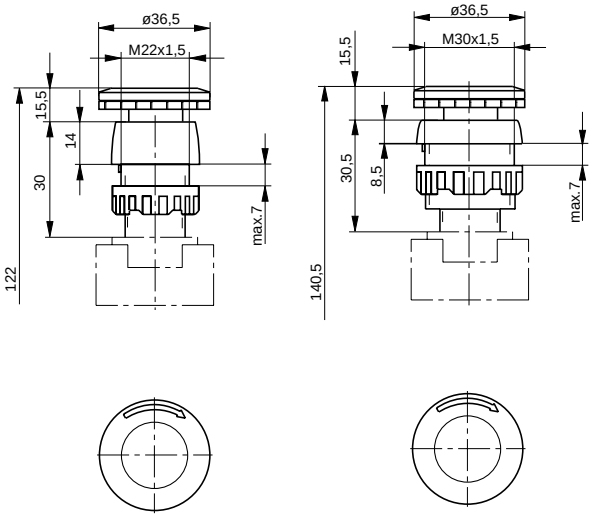

Order Instructions

Description	Symbol	Mounting Ø (mm)	Order Instructions Type	Order No.
Basic valve for panel mounting	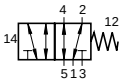		**S9 590RF-1/8**	**PA 10320**
Rotary lever, indexed		22	**12T-22**	**KX 9355**
		30	**12T-30**	**KX 9314**
Rotary lever with spring return		22	**12T-RF-22**	**KX 9356**
		30	**12T-RF-30**	**KX 9315**
Pushbutton		22	**13T-RF-22**	**KX 9357**
		30	**13T-RF-30**	**KX 9316**
Mushroom pushbutton		22	**15T-RF-22**	**KX 9358**
		30	**15T-RF-30**	**KX 9317**
Locking switch		22	**16T-22**	**KX 9359**
		30	**16T-30**	**KX 9318**
Rotary switch		22	**17T-22**	**KX 9360**
		30	**17T-30**	**KX 9319**
Mushroom switch EMERGENCY SHUTDOWN		22	**18T-22**	**KX 9361**
		30	**18T-30**	**KX 9320**

5/3 Way Valve

G1/8

Actuation: Hand lever

Series S9

S9 511..-1/8

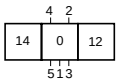

Characteristics to VDI 3290			Pressures quoted as gauge pressure
Characteristics	Symbol	Unit	Description
General Features			
Type			Spool valve
Mounting			2 screws M5
Tube connection			Thread
Port size			G1/8; 7.4 deep
Weight (mass)		kg	0.195
Installation			In any position
Ambient temperature range	ϑ_{min} ϑ_{max}	°C °C	-10 +60
Medium temperature range	ϑ_{min} ϑ_{max}	°C °C	-10 +70
Medium			Filtered compressed air
Lubrication			With or without oil mist lubrication [1]
Pneumatic Characteristics			
Nominal pressure	p_n	bar	6
Operating pressure range	p_{min} p_{max}	bar bar	0 10
Nominal flow	Q_N	l/min	500
Actuation			
Manual control			Direct
Stroke		mm	4.5
Actuating force	F_b	N	G, E, B: 7 RFG, RFE, RFB: 10

Note: When using below freezing point (°C) it is necessary to consult us.

[1] We recommend the use of mineral oil type VG32 to ISO 3448

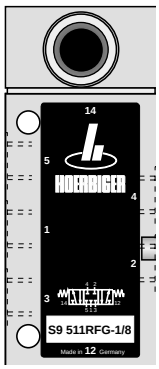

A1P374E00DX00X

The right to introduce technical modifications is reserved

For product group list see 3.42.001E

HOERBIGER ORIGA

Dimensions (mm)

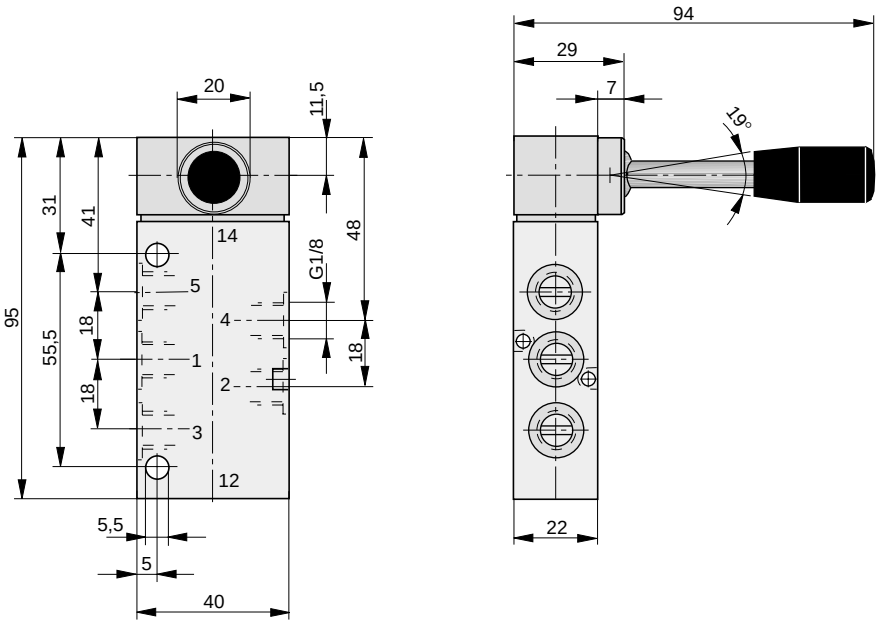

Order Instructions

Actuation	Middle position function	Symbol	Order Instructions Type	Order No.
Hand lever indexed in 3 positions	Middle position closed	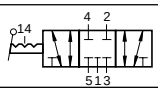	**S9 511G-1/8**	**PA 10321**
	Middle position exhausted	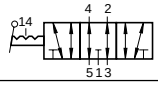	**S9 511E-1/8**	**PA 10322**
	Middle position pressurized	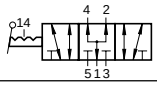	**S9 511B-1/8**	**PA 10323**
Hand lever, spring return to middle position	Middle position closed	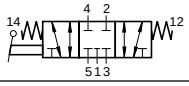	**S9 511RFG-1/8**	**PA 10324**
	Middle position exhausted	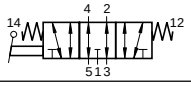	**S9 511RFE-1/8**	**PA 10325**
	Middle position pressurized	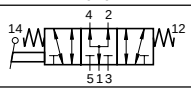	**S9 511RFB-1/8**	**PA 10326**

5/3 Way Valve

G1/8

Actuation:
Safety hand lever

Series S9

S9 511S.-1/8

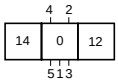

Characteristics to VDI 3290			Pressures quoted as gauge pressure
Characteristics	Symbol	Unit	Description
General Features			
Type			Spool valve
Mounting			2 screws M5
Tube connection			Thread
Port size			G1/8; 7.4 deep
Weight (mass)		kg	0.195
Installation			In any position
Ambient temperature range	ϑ_{min} ϑ_{max}	°C °C	-10 +60
Medium temperature range	ϑ_{min} ϑ_{max}	°C °C	-10 +70
Medium			Filtered compressed air
Lubrication			With or without oil mist lubrication [1)]
Pneumatic Characteristics			
Nominal pressure	p_n	bar	6
Operating pressure range	p_{min} p_{max}	bar bar	0 10
Nominal flow	Q_N	l/min	500
Actuation			
Manual control			Direct
Stroke		mm	4.5
Actuating force	F_b	N	7

Note: When using below freezing point (°C) it is necessary to consult us.

[1)] We recommend the use of mineral oil type VG 32 to ISO 3448

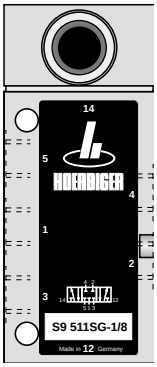

For product group list see 3.42.001E

Data Sheet No. 3.42.101E-1

A1P375E00DX00X

The right to introduce technical modifications is reserved

HOERBIGER ORIGA

Dimensions (mm)

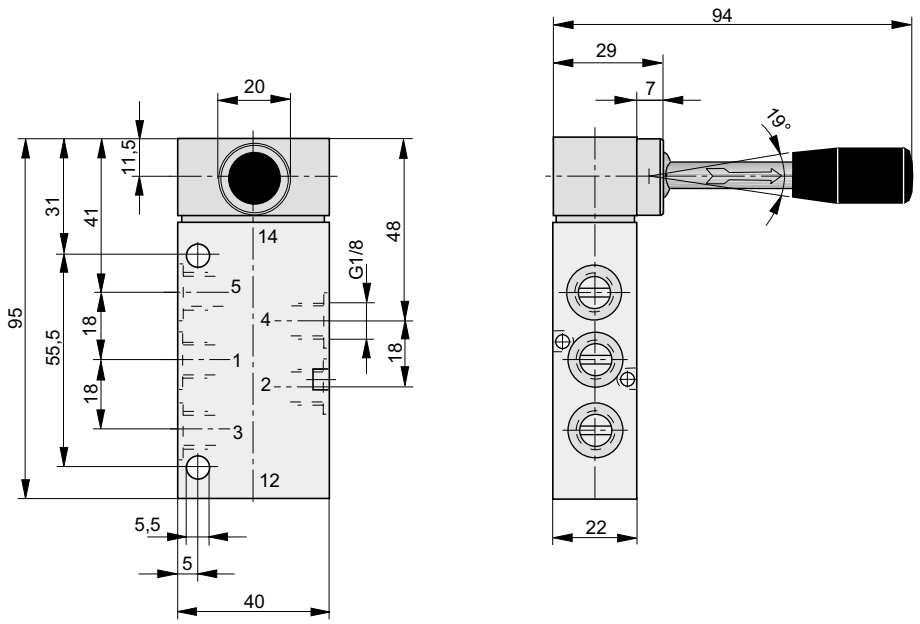

Order Instruction

Actuation	Middle position function	Symbol	Order Instruction Type	Order No.
Hand lever secured in 3 positions	Middle position closed	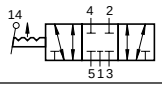	**S9 511SG-1/8**	**PA 10327**
	Middle position exhausted	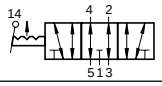	**S9 511SE-1/8**	**PA 10328**
	Middle position pressurized	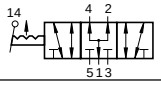	**S9 511SB-1/8**	**PA 10329**

5/3 Way Valve

G1/8

Actuation:
Pneumatic
- by permanent signal

Series S9

S9 561RF.-1/8

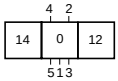

Characteristics to VDI 3290			Pressures quoted as gauge pressure
Characteristics	Symbol	Unit	Description
General Features			
Type			Spool valve
Mounting			2 screws M5 (M3)
Tube connection			Thread
Port size			G1/8; 7.4 deep
Weight (mass)		kg	0.180
Installation			In any position
Ambient temperature range	ϑ_{min} ϑ_{max}	°C °C	-10 +60
Medium temperature range	ϑ_{min} ϑ_{max}	°C °C	-10 +70
			Note: When using below freezing point (°C) it is necessary to consult us.
Medium			Filtered compressed air
Lubrication			With or without oil mist lubrication [1)]
Pneumatic Characteristics			
Nominal pressure	p_n	bar	6
Operating pressure range	p_{min} p_{max}	bar bar	0 10
Nominal flow	Q_N	l/min	500
Actuation			
Pneumatic			Direct
Actuation pressure range	$p_{st\ min}$ $p_{st\ max}$	bar bar	2.5 10

[1)] We recommend the use of mineral oil type VG 32 to ISO 3448

A1P376E00DX00X

The right to introduce technical modifications is reserved

For product group list see 3.42.001E

Dimensions (mm)

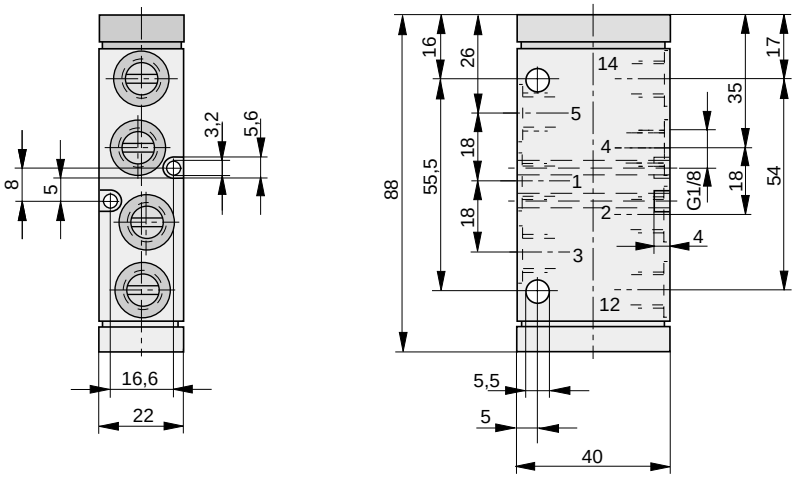

Order instructions

Actuation	Middle position function	Symbol	Order Instructions Type	Order No.
Pneumatic, by permanent signal spring return to middle position	Middle position closed	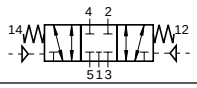	**S9 561RFG-1/8**	**PA 10330**
	Middle position exhausted	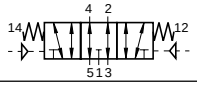	**S9 561RFE-1/8**	**PA 10331**
	Middle position pressurized	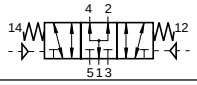	**S9 561RFB-1/8**	**PA 10332**

5/3 Way Valve

G1/8

Actuation:
Electrically pilot operated with standard solenoids
- by permanent signal
- by impulse

Series S9

S9 581RF.-1/8

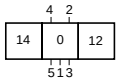

Characteristics to VDI 3290 Pressures quoted as gauge pressure

Characteristics		Symbol	Unit	Description	
General Features					
Type				Spool valve	
Mounting				2 screws M5 (M3)	
Tube connection				Thread	
Port size				G 1/8; 7.4 deep	
Weight (mass)			kg	0.425	
Installation				In any position	
Ambient temperature range		ϑ_{min} ϑ_{max}	°C °C	-10 +60	Note: When using below freezing
Medium temperature range		ϑ_{min} ϑ_{max}	°C °C	-10 +70	point (°C) it is necessary to consult us.
Medium				Filtered compressed air	
Lubrication				With or without oil mist lubrication [1]	
Pneumatic Characteristics					
Nominal pressure		p_n	bar	6	
Operating pressure range		p_{min} p_{max}	bar bar	2 10	
Nominal flow		Q_N	l/min	600	
Actuation					
Electrical				Pilot operated	
Voltage				AC	DC
Nominal voltage*	Standard version	U_n	V	220	24
	Low watt. version	U_n	V	220	24
	Ex-proof version **	U_n	V	220	24
				Further voltages available on request	
Initial power consumption	Standard version		VA (W)	8.5	2.5
	Low watt. version		VA (W)	6.6	2.1
	Ex-proof version **		VA (W)	5.0	5.1
Continuous consumption	Standard version		VA (W)	6.0	2.5
	Low watt. version		VA (W)	3.9	2.1
	Ex-proof version **		VA (W)	5.0	5.1
Duty cycle		ED	%	100	
Electrical protection				IP65 to DIN 40050 (with plug)	
Insulating material				F (Ex-version E) to VDE 0580	
Connection				Plug to DIN 43650 form B[2] Ex-version: cable 1200 mm long	

* See Order Instructions for details
** For explosion-proof versions different technical requirements apply, according to Declaration of Conformity
[1] We recommend the use of mineral oil type VG32 to ISO 3448
[2] Plug for low wattage version available in DIN 43650 form A

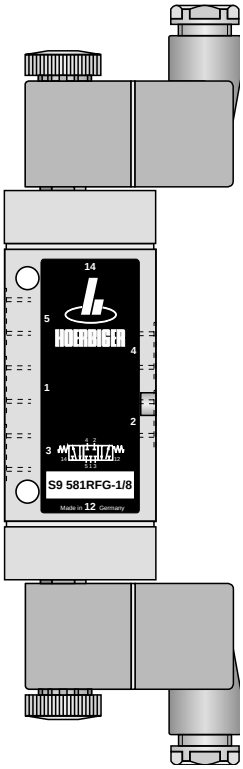

A1P377E00DX00X

The right to introduce technical modifications is reserved

For product group list see 3.42.001E

HOERBIGER ORIGA

Dimensions (mm)

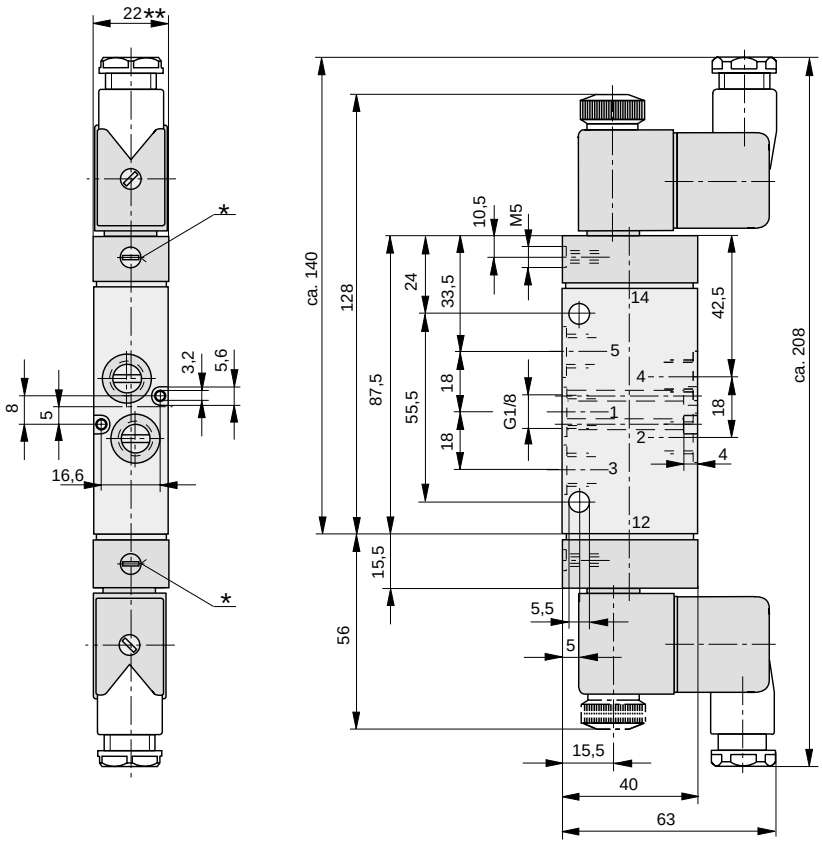

* Manual override
** Solenoid width is 30 mm on ex-proof version and low wattage coil version

Order Instructions

Actuation	Middle position function	Symbol	Order Instructions Type	Order No.
Electrical, by permanent signal, spring return to middle position	Middle position closed	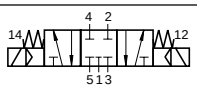	**S9 581RFG-1/8-..**	**PA 10333-..33**
	Middle position exhausted	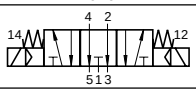	**S9 581RFE-1/8-..**	**PA 10334-..33**
	Middle position pressurized	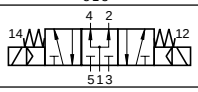	**S9 581RFB-1/8-..**	**PA 10335-..33**

Solenoid version	Nominal voltage	Applicable for	Key code
Standard version	220 V/50 (60) Hz	110 V=	61
	24 V=	60 V/50 (60) Hz	02
Low wattage coil version	24 V=		13
	220 V/50 (60) Hz		69
Ex-proof version *	24 V=		48
	220 V/50 (60) Hz		98

* For explosion-proof versions different technical requirements apply, according to Declaration of Conformity

Further voltages available on request.

3/2, 5/2 and 5/3 Way Valves

G1/8

with Logic Elements

Actuation:
AND
OR

Series S9 ... .../..-1/8

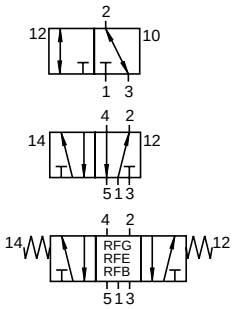

Characteristics to VDI 3290	Pressures quoted as gauge pressure			
Characteristics	Symbol	Unit	Description	
General Features				
Type			Spool valve	
Mounting			2 screws M5 (M3)	
Tube connection			Thread	
Port size			G 1/8; 7.4 deep	
Weight (mass)		kg	See table	
Installation			In any position	
Ambient temperature range	ϑ_{min} ϑ_{max}	°C °C	-10 +60	Note: When using below freezing point (°C) it is necessary to consult us.
Medium temperature range	ϑ_{min} ϑ_{max}	°C °C	-10 +70	
Medium			Filtered compressed air	
Lubrication			With or without oil mist lubrication [1]	
Pneumatic Characteristics				
Nominal pressure	p_n	bar	6	
Operating pressure range	p_{min} p_{max}	bar bar	0 10	
Nominal flow	Q_N	l/min	500	
Actuation				
Pneumatical			Direct, indirect	
Control pressure range	$p_{st\,min}$ $p_{st\,max}$	bar bar	2 10	With permanent signal
	$p_{st\,min}$ $p_{st\,max}$	bar bar	1.5 10	With impulse signal

[1] We recommended the use of mineral oil type VG32 to ISO 3448

Weight (mass) kg

Description	Weight (kg) Version: permanent signal with spring return	Version: with impulse actuation
3/2 way valve	0.137	0.147
5/2 way valve	0.160	0.170
5/3 way valve	0.180	–

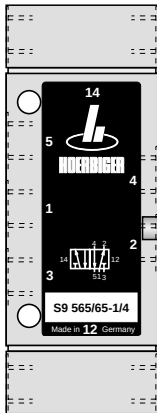

For product group list see 3.42.001E

Data Sheet No. 3.42.290E-1

A1P462E00DX00X

The right to introduce technical modifications is reserved

HOERBIGER ORIGA

Valve Combinations with Logic Elements - 3/2, 5/2 and 5/3 Way Valves

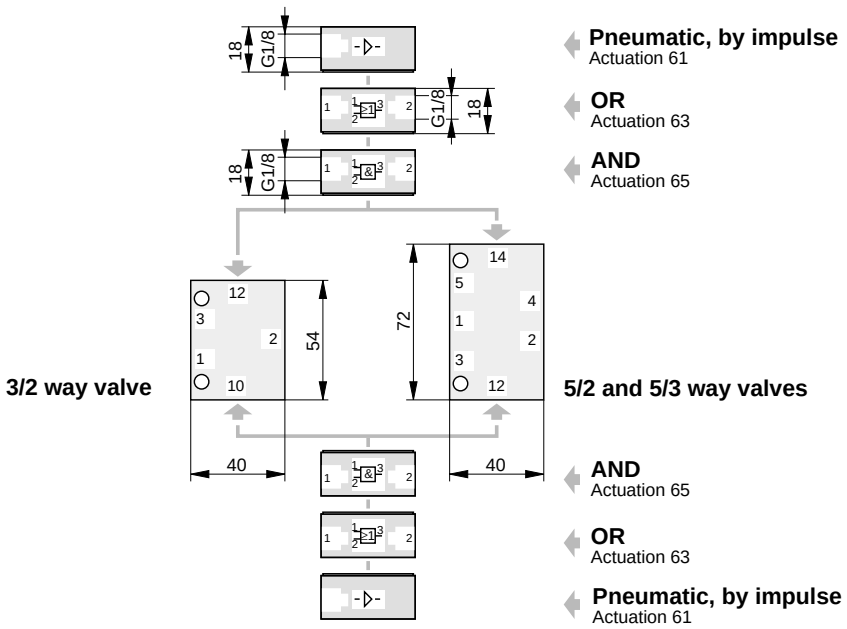

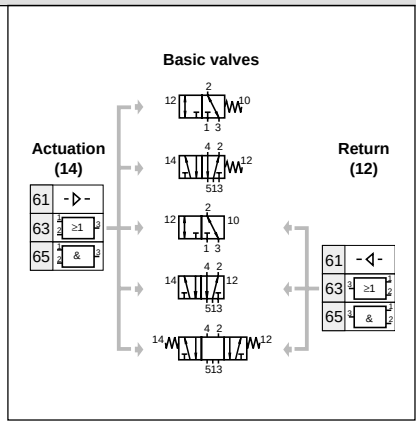

for other informations see 3.42.004E, 3.42.052E, 3.42.102E

Order Instructions	S9	5	63 / 65	RFG	1/8	Ordering Example

Version	
3	3 way valve
5	5 way valve

Middle position function (only with 5/3 way valves)	
RFG	closed
RFE	vented
RFB	pressurized

Actuation (14)	
61	pneumatic
63	OR
65	AND

Return (12)	
RF	spring return
61	pneumatic
63	OR
65	AND

3/2 Way Valve

G1/8

Actuation:
Electrical, directly operated by permanent signal

Series V9

V9 381RF-1/8-NG

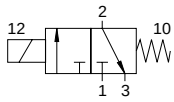

V9 381H-RF-1/8-NG

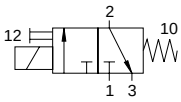

V9 381H-RF-1/8-NO

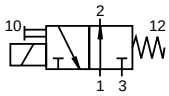

Characteristics to VDI 3290			Pressures quoted as gauge pressure	
Characteristics	Symbol	Unit	Description	
General Features				
Type			Directly operated poppet valve, normally closed	
Mounting			Single valve: 2 screws M3 x 30 Mounting on P-supply manifold: 2 screws M3 x 40	
Tube connection			Thread	
Port size			G 1/8; 8 deep	
Weight (mass)		kg	0.140	
Nominal bore		mm	1.3	
Installation			In any position	
Ambient temperature range	ϑ_{min} ϑ_{max}	°C °C	-10 +60	Note: When using below freezing point (°C) it is necessary to consult us.
Medium temperature range	ϑ_{min} ϑ_{max}	°C °C	-10 +70	
Medium			Filtered compressed air	
Lubrication			With or without oil mist lubrication [1]	
Pneumatic Characteristics				
Nominal pressure	p_n	bar	6	
Operating pressure range	p_{min} p_{max}	bar bar	0 10	
Nominal flow	Q_N	l/min	37	
Actuation				
Electrical			Direct	
Voltage			AC	DC
Nominal voltage* — Standard version	U_n	V	220	24
Nominal voltage* — Low watt. version	U_n	V	220	24
Nominal voltage* — Ex-proof-version **	U_n	V	220	24
			Further voltages available on request	
Initial power consumption — Standard version		VA (W)	11	4.8
Initial power consumption — Low watt. version		VA (W)	7.8	2.7
Initial power consumption — Ex-proof-version **		VA (W)	5	5.1
Continuous consumption — Standard version		VA (W)	8.5	4.8
Continuous consumption — Low watt. version		VA (W)	4.9	2.7
Continuous consumption — Ex-proof-version **		VA (W)	5	5.1
Duty cycle	ED	%	100	
Electrical protection			IP65 to DIN 40050 (with plug)	
Insulating material			F (Ex-version E) to VDE 0580	
Connection			Plug to DIN 43650 form B[2] Ex-version: cable 1200 mm long	

* See Order Instructions for details
** For explosion-proof versions different technical requirements apply, according to Declaration of Conformity
[1] We recommend the use of mineral oil type VG32 to ISO 3448
[2] Plug for low wattage version available in DIN 43650 form A

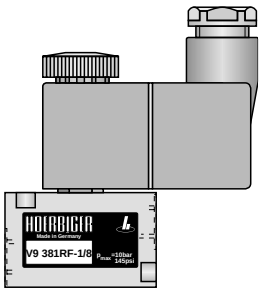

For P-supply manifolds G1/8 see 3.42.450E
Accessories for mounting on P-supply manifold:
O-ring 10x2, 88-37H643-75; screw M3x40, ZP 3986

Data Sheet No. 3.42.310E-1

HOERBIGER ORIGA

A1P455E00DX00X

The right to introduce technical modifications is reserved

Dimensions (mm)

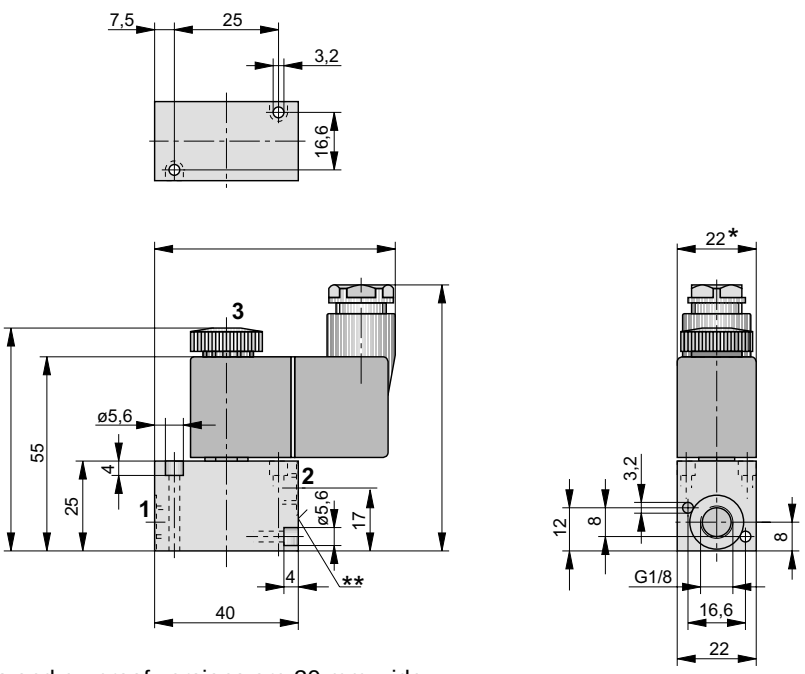

* Low wattage versions and ex-proof versions are 30 mm wide:
therefore to mount these on a P-Supply Manifold (see 3.42.450E) speical measures are needed - please consult us.
** Manual override

Order Instructions

Actuation	Return	Symbol	Order Instructions Type	Order No.
Electrical by permanent signal	Spring return	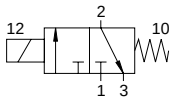	**V9 381RF-1/8-NG-..**	**PA 10362-..33**
Electrical by permanent signal with manual override	Spring return	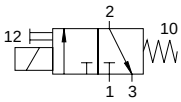	**V9 381H-RF-1/8-NG-..**	**PA 10363-..33**
		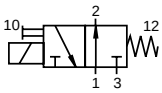	**V9 381H-RF-1/8-NO-..***	**PA 10367-..33**

* not suitable for P-supply manifold mounting

Solenoid version	Nominal voltage	Applicable for	Key code
Standard version	220 V/50 (60) Hz	110 V=	61
	24 V=	60 V/50 (60) Hz	02
Low wattage coil version	24 V=		13
	220 V/50 (60) Hz		69
Ex-proof version *	24 V=		48
	220 V/50 (60) Hz		98

* For explosion-proof versions different technical requirements apply, according to Declaration of Conformity

Further voltages available on request.

Accessories for P-Supply Manifold Mounting

	Order No.
O-ring 10x2	**88-37H643-75**
Mounting screw M3x40	**ZP 3986**

3/2 Way Valve

G1/8 NW 2,5

Actuation:
Electrical, directly operated by permanent signal

Series V9

V9 381RF-1/8-NG

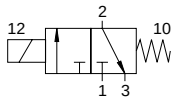

V9 381H-RF-1/8-NG

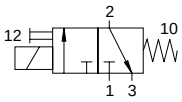

Characteristics to VDI 3290	Pressures quoted as gauge pressure			
Characteristics	Symbol	Unit	Description	
General Features				
Type			Directly operated poppet valve, normally closed	
Mounting			Single valve: 2 screws M4x30 Mounting on P-supply manifold G1/4: 2 screws M4x55	
Tube connection			Thread	
Port size			G1/8	
Weight		kg	0.320	
Nominal diameter		mm	2.5	
Installation			In any position	
Ambient temperature range	ϑ_{min} ϑ_{max}	°C °C	-10 +40	Note: When using below freezing point (°C) it is necessary to consult us.
Medium temperature range	ϑ_{min} ϑ_{max}	°C °C	-10 +40	
Medium			Filtered compressed air	
Lubrication			With or without oil mist lubrication [1)]	
Pneumatic Characteristics				
Nominal pressure	p_n	bar	6	
Operating pressure range	p_{min} p_{max}	bar bar	0 10	
Nominal flow	Q_N	l/min	150	
Actuation				
Electrical			Direct	
Voltage			AC	DC
Standard version	U_n	V	220	24
			Further voltages available on request	
Initial power consumption		VA (W)	11.5	10
Continuous consumption		VA (W)	7.5	
Duty cycle	ED	%	100	
Electrical protection			IP65 to DIN 40050 (withplug)	
Insulating material			F to VDE 0580	
Connection			Plug to DIN 43650 form A	

* See Order Instructions for details
[1)] We recommend the use of mineral oil type VG32 to ISO 3448

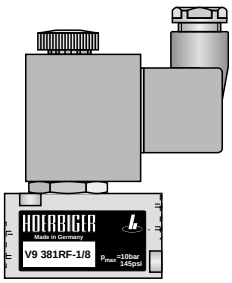

For P-supply manifolds G1/4 see 3.52.450E
Accessories for mounting on P-supply manifold:
O-ring 13x2, 888-52H643-75; screw M4x55, ZP 3988

Data Sheet No. 3.42.311E-1

A1P498E00IX00X

The right to introduce technical modifications is reserved

HOERBIGER ORIGA

Dimensions (mm)

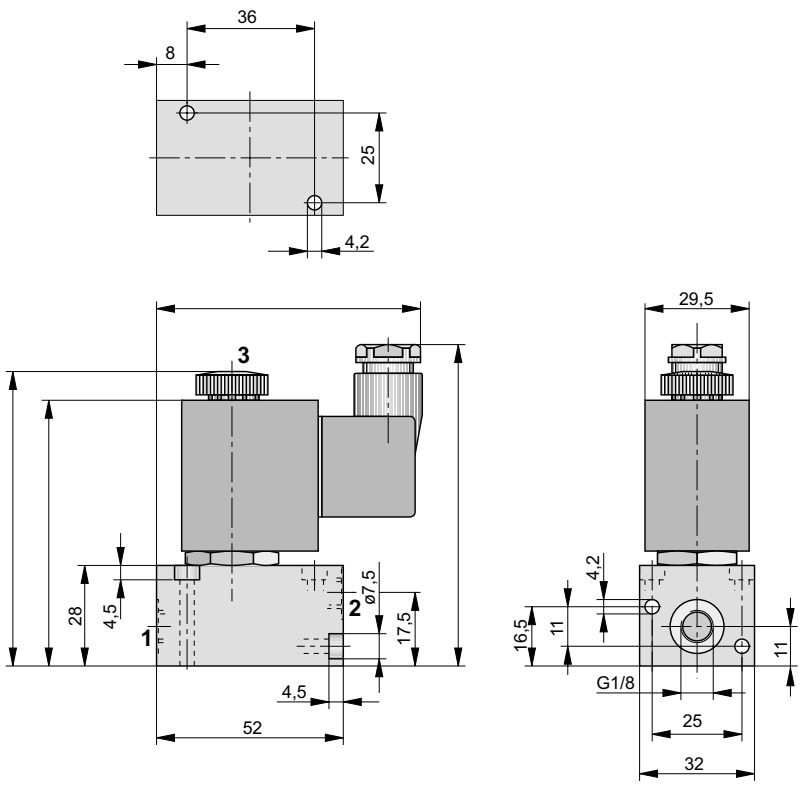

Order Instructions

Actuation	Return	Symbol	Order Instructions Type	Order No.
Electrical by permanent signal	Spring return	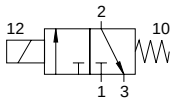	**V9 381RF-1/8-NG-..**	**PA 10369-0233**
Electrical by permanent signal with manual override	Spring return	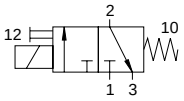	**V9 381H-RF-1/8-NG-..**	**PA 10370-0233**

Solenoid version	Nominal voltage	Applicable for	Key code
Standard version	220 V/50 (60) Hz	110 V=	61
	24 V=	60 V/50 (60) Hz	02

Further voltages available on request.

Accessories for P-Supply Manifold Mounting

	Bestell-Nr.
P-supply manifold PL-1/4-..	**PD 32765-.... (Valve Positions)**
P-supply manifold PLK-1/4-..	**PD 37175-.... (Valve Positions)**
O-ring 13x2	**88-52H643-75**
Socket head screw M4x55	**ZP 3988**

Valve Island with Multipole Connection

Characteristics to VDI 3290			Pressures quoted as gauge pressure
Characteristics	Symbol	Unit	Description
General Features			
Mounting			2 screws – see drawing
Type			IM20-1/8
Port size			
– air supply & exhaust			G1/4 both sides
– valve outlets:			G1/8
Grid size for valve positions		mm	22
Installation			In any position
Ambient and medium temperature range	ϑ_{min} ϑ_{max}	°C °C	–25 For use below freezing point +70 (0 °C) please consult us
Medium			Filtered (5 µm) compressed air or neutral gases, lub. or non-lub.
Materials			
Base plate			Aluminium
Valve housing			Aluminium
Seals			NBR
Valve service life			10 x 10^6 switching cycles
No. of valve positions			4 – 6 – 8 – 10 – 12 – 14 – 16*
No. of switching outputs			Max. 24
No. of sensor inputs			Max. 32
Pneumatic Characteristics			
Nominal pressure	p_n	bar	6
Operating pressure range	p_{min} p_{max}	bar bar	2.5 10
Nominal flow	Q_n	l/min	600
Actuation			
Electrical			By control system
Voltage type			DC
Nominal voltage	U_n	V	24
Power consumption		W	2.5
Mass/Ground			Minus pole
Electrical protection		IP	65
Electrical protection, input clamps		IP	20
Electrical protection, input connectors		IP	65
Connection, multipole connection			25-pin sub-D connector or 24-pin industrial connector
Sensor inputs			Ladder clamps or 4-pin M8 x 1 connectors
Switching indicator			LED
Protective circuit			Integrated

* other numbers of valves can be fitted via the use of cover plates.

Versions:
- **Connection with sub-D connector**
- **Connection with heavy duty industrial connector**
- **With or without sensor inputs**
- **With multiconnection for sensor inputs (via 44-pin D sub-connector)**

Series

IM20-1/8

Multipole islands can be equipped with the following valves:
- 5/2 way valves with spring return
- 5/2 way impulse valves
- 5/3 way valves with spring return to middle position
  - middle position closed
  - middle position vented
  - middle position pressurized

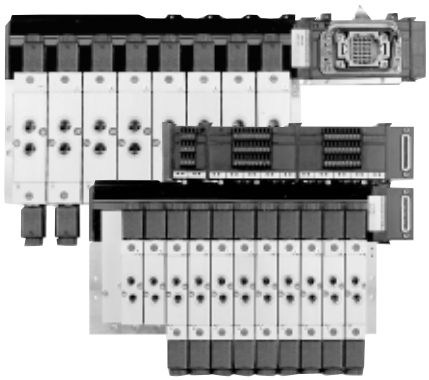

For **bus connection** see 3.42.333E, for **valve islands G1/4** see 3.52.332E, 333E, for **solenoid valves G1/8** see 3.42.053E, 3.42.103E

Data Sheet No 3.42.332E-1

A1P674E00JAA00X

The right to introduce technical modifications is reserved

Dimensions
– Multipole island with 25-pin sub-D connector (or heavy duty industrial connector) and 16 M8 4-pin feedback inputs with 44-pin D sub-connector

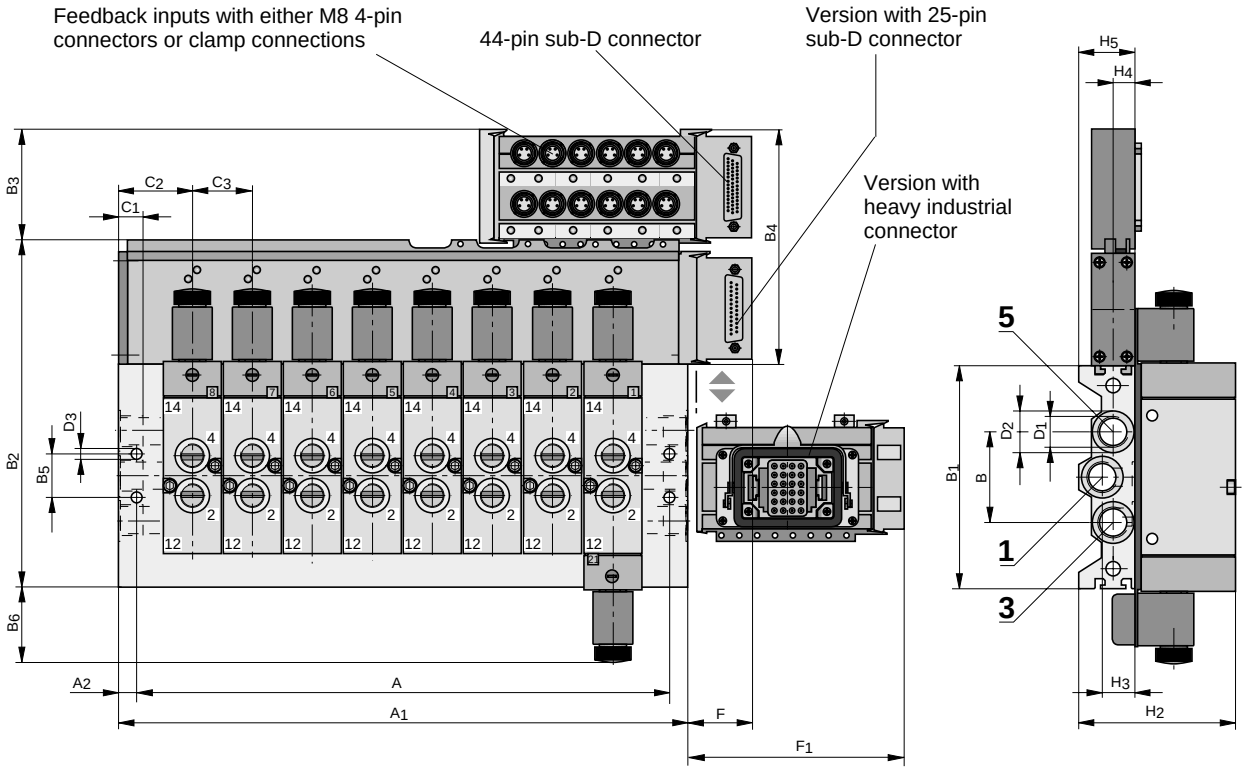

Dimension Table (mm)

Valve island	Dimension A	A_1	A_2	B	B_1	B_2	B_3	B_4	B_5	B_6	B_7	C_1
IM20-1/8	17+ x C_3	30+ x C_3	6	43	99	166	62.5	132	20.5	42.5	60	11

Valve Island	Dimension C_2	C_3	D_1	øD_2	øD_3	F	F_1	H_2	H_3	H_4	H_5
IM20-1/8	26	23	G1/4	19x0.2	5.5	40	126	68	12	9	25

x C_3= dimension C_3 multiplied by number of valves

Ordering Example:
Valve island with fieldbus connection,
8 fold, equipped with:
1 bistable 5/2 valves S9 581-1/8
7 monostable 5/2 valves S9 581RF-1/8

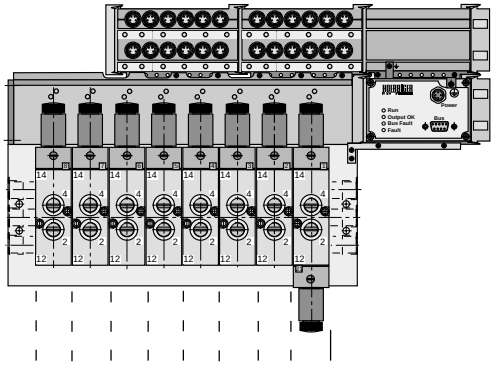

	Order No.							Electr. connection		Internal Bus-expansion	No. of valve		Valve position												Input module	Number of inputs		Channel divider	Position of channel divider	
													1	2	3	4	5	6	7	8	9	10	11	12						
Ordering example	P	A	1	0	3	8	1	D	S		0	8	M	M	M	M	M	M	M	J										

4 6 8 10 12
even number of valve positions only

Important: Please specify the code for the desired valve types

Valve Island – Sizes	
PA 10381	Type: IM20-1/8 Connections: G1/8 –valve ports G1/4 – base plate

Electrical Connection	
Multipole Version	
DS	with Sub-D connector
HI	with industry connector

Internal Bus Expansion (not occupied)

Valve Positions	
04	up to 4 valves
06	5 and 6 valves
08	7 and 8 valves
10	9 and 10 valves
12	11 and 12 valves
14	13 and 14 valves
16	15 and 16 valves

Input Modules	
K	Pins IP20
S	M8 IP65 connector
04-08-12	Number of inputs
16-20-24	
28-32	

Dual Pressure Operation	
J	with channel divider in port 1 (P)
01 – 11	Position of channel divider to valve position

Ordering Code for Valves and Blanking Plates

Code	Symbol	Description	Data Sheet
A	–	Blanking plate on valve position	For further informations, please refer to the special Data Sheets 3.42.053E, 3.42.103E
M		5/2 way solenoid valve, permanent signal with spring return Type: S9 581RF-..	
J	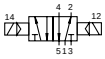	5/2 way solenoid valve, Impulse version Type: S9 581-..	
G	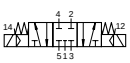	5/3 way solenoid valve, spring return to middle position, middle position closed Type: S9 581RFG-..	
B	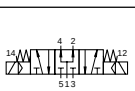	5/3 way solenoid valve, spring return to middle position, middle position pressurised Type: S9 581RFB-..	
E	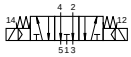	5/3 way solenoid valve, spring return to middle position, middle position vented Type: S9 581RFE-....	

Accessories – for valve islands with multipole connection

- Cable with Sub-D connector
- Heavy duty industrial connector
- Straight M8 4-pin connector

Cable with Sub-D Connector

Picture	Number of poles	Cable length	Order Instructions Type	Order No.
	25	1,0 m	**GSK-25-1**	**KL9012**
	25	3,0 m	**GSK-25-3**	**KL9013**
	25	5,0 m	**GSK-25-5**	**KL9014**
	44	5,0 m	**GSK-44-5**	**KL9005**

Heavy Duty Industrial Connector (without cable)

Picture	Number of pins	Order Instructions Type	Order No.
	24	**K-IST-24**	**KL9003**

Connection Plan

Included with each delivery

Straight M8 Connector

Picture	Number of pins	Cable length	Order Instructions Type	Order No.
	4	for custom made cables	**K-M8-4**	**KL9011**

Valve Island with Bus Connection

Characteristics to VDI 3290			Pressures quoted as gauge pressure
Characteristics	Symbol	Unit	Description
General Features			
Mounting			2 screws – see drawing
Type			IM20-1/8
Connection thread			
– air supply & exhaust			G1/4 both sides
– valve outlets:			G1/8
Grid size for valve positions		mm	22
Installation			In any position
Ambient and medium temperature range	ϑ_{min} ϑ_{max}	°C °C	–25 For use below freezing +70 point (0 °C) please consult us
Medium			Filtered (5µm) compressed air or neutral gases, lub. or non-lub.
Materials			
Base plate			Aluminium
Valve housing			Aluminium
Seals			NBR
Valve service life			10 x 10^6 switching cycles
No. of valve positions			4 – 6 – 8 – 10 – 12–14–16*
No. of switching outputs			Max. 24
No. of sensor inputs			Max. 32
Pneumatic Characteristics			
Nominal pressure	p_n	bar	6
Operating pressure range	p_{min} p_{max}	bar bar	2.5 10
Nominal flow	Q_n	l/min	600
Actuation			
Electrical			Pilot operated
Voltage type			DC
Nominal voltage	U_n	V	24
Power consumption		W	2.5
Mass/Ground			Minus pole
Electrical protection		IP	65
Electrical protection, input clamps		IP	20
Electrical protection, input connectors		IP	65
Connection, field bus connection			According to field bus accessories
Sensor inputs			Ladder clamps or M8 x 1 4-pin connectors
Switching indicator			LED
Protective circuit			Integrated

* other numbers of valves can be fitted via the use of blanking plates

Versions:
- **Profibus DP**
- **Interbus S**
- **CAN Open**
- **internal bus**
- **with or without sensor inputs**
- **with or without integrated modules for sensor inputs**

Series

IM20-1/8

Valve islands with bus connection can be equipped with the following valves:
- 5/2 way valves with spring return
- 5/2 way impulse valves
- 5/3 way valves with spring return to middle position
  - middle position closed
  - middle position vented
  - middle position pressurized

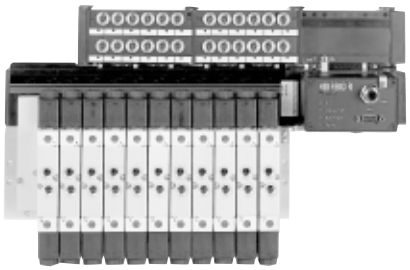

For **multipole connection** see 3.42.332E, for **valve islands G1/4** see 3.52.332E, 333E, for **solenoid valves G1/8** see 3.42.053E, 3.42.103E

A1P675E00JAA00X

The right to introduce technical modifications is reserved

Dimensions
– Field bus island with M8 4-pin feedback inputs

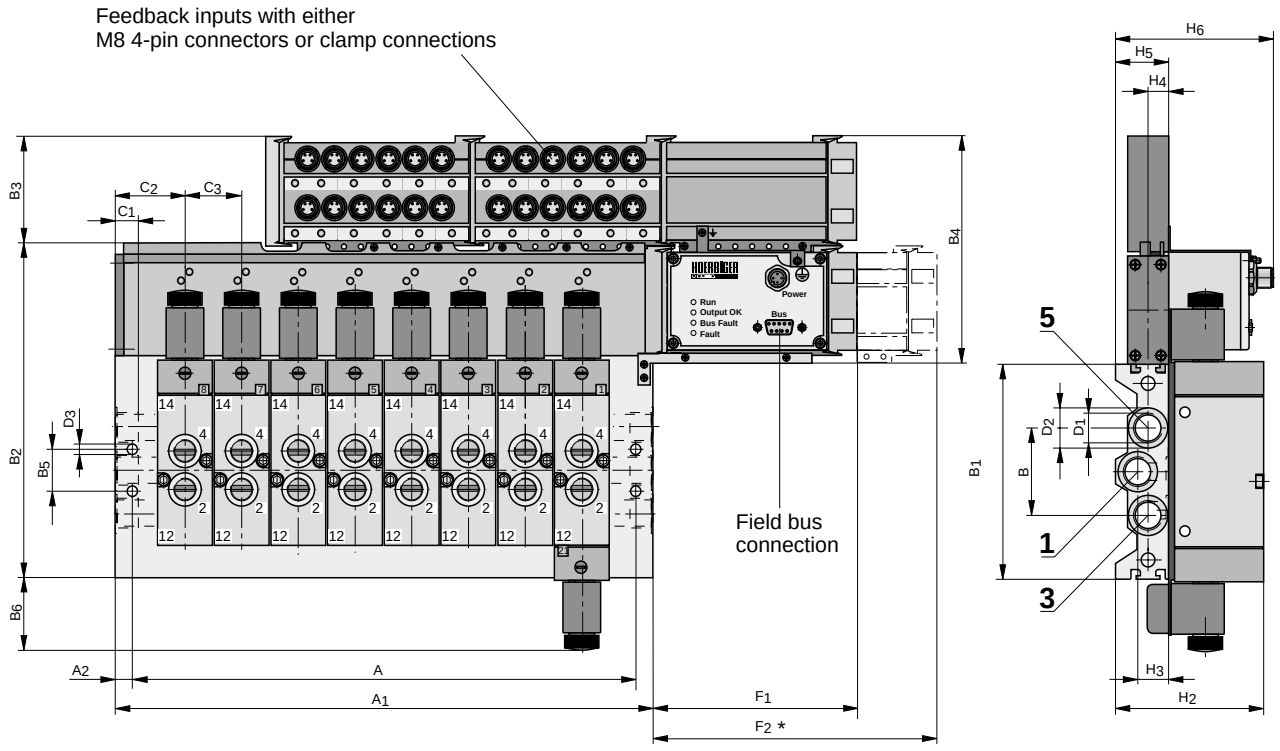

* with expansion module for internal bus

Dimension Table (mm)

Valve island	Dimension A	A_1	A_2	B	B_1	B_2	B_3	B_4	B_5	B_6	B_7	C_1
IM20-1/8	17+ x C_3	30+ x C_3	6	43	99	166	62.5	132	20.5	42.5	60	11

Valve island	Dimension C_2	C_3	D_1	øD_2	øD_3	F_1	F_2	H_2	H_3	H_4	H_5	H_6
IM20-1/8	26	23	G1/4	19x0.2	5.5	126	164	68	12	9	25	88.5

x C_3= dimension C_3 multiplied by number of valves

Order Instructions for Valve Islands

Ordering Example:
Valve island with fieldbus connection,
8 fold, equipped with:
1 bistable 5/2 valves S9 581-1/8
7 monostable 5/2 valves S9 581RF-1/8

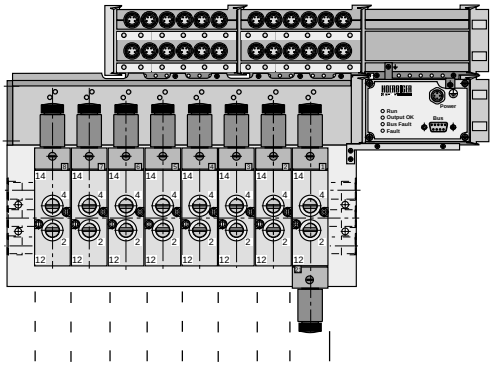

	Order No.							Electr. connection		Internal Bus-expansion	No. of Valves		Valve position												Input module	Number of inputs		Channel divider	Position of channel divider	
													1	2	3	4	5	6	7	8	9	10	11	12						
Ordering example	P	A	1	0	3	8	1	D	P		0	8	M	M	M	M	M	M	M	J										

4 6 8 10 12
even number of valve positions only

Important: Please specify the code for the desired valve types

Valve Island – Sizes	
PA 10381	Type: IM20-1/8 Connections: G1/8 –valve ports G1/4 – base plate

Input Modules	
K	Pins IP20
S	M8 IP65 connector
04-08-12	Number of inputs
16-20-24	
28-32	

Electrical Connection	
Fieldbus Version	
DP	Profibus DP
IS	Interbus S
CO	CAN Open
IB	Internal Bus

Dual Pressure Operation	
J	with channel divider in port 1 (P)
01 – 11	Position of channel divider to valve position

Internal Bus Expansion	
J	RIO-IF Module

Valve Positions	
04	up to 4 valves
06	5 and 6 valves
08	7 and 8 valves
10	9 and 10 valves
12	11 and 12 valves
14	13 and 14 valves
16	15 and 16 valves

Ordering Code for Valves and Blanking Plates

Code	Symbol	Description	Data Sheet
A	–	Blanking plate on valve position	For further informations, please refer to the special Data Sheets 3.42.053E, 3.42.103E
M		5/2 way solenoid valve, permanent signal with spring return Type: S9 581RF-..	
J	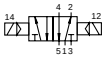	5/2 way solenoid valve, Impulse version Type: S9 581-..	
G	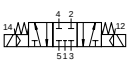	5/3 way solenoid valve, spring return to middle position, middle position closed Type: S9 581RFG-..	
B	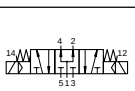	5/3 way solenoid valve, spring return to middle position, middle position pressurised Type: S9 581RFB-..	
E	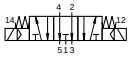	5/3 way solenoid valve, spring return to middle position, middle position vented Type: S9 581RFE-....	

Accessories – for valve islands with fieldbus connection

- Cable with connector
- M8 4-pin straight connector
- M12 4-pin straight connector
- M12 4-pin elbow connector

Cable with M8 connector – for internal bus expansion

Picture	Cable length	Order Instructions Type	Order No.
	1,0 m	**K-M8-41**	**KL9008**
	2,0 m	**K-M8-42**	**KL9010**

Straight M12 connector (without cable)

Picture	Number of pins	Application	Order Instructions Type	Order No.
	4	for power supply of the bussystem	**K-M12-4**	**KL9007**

Elbow M12 connector (without cable)

Picture	Number of pins	Application	Order Instructions Type	Order No.
	4	for power supply of the bussystem	**K-M12W-4**	**KL9004**

Operation Manual (Disk 3.5”)

Included with each delivery (order no. PD44291)

Straight M8 Connector

Picture	Number of poles	Application	Order Instructions Type	Order No.
	4	for custom made cables	**K-M8-4**	**KL9011**

P-Supply Manifolds

for directional valves of the S9-1/8 Series

Series PL.-1/8-..

Dimensions (mm)

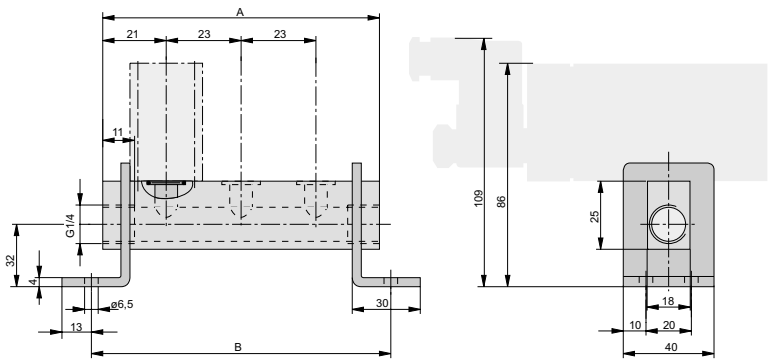

Drawing shows: PLK-1/8-3

Dimension Table (mm)

Type	No. of valves	A	B
PLK-1/8-2	2	65	79
PLK-1/8-3	3	88	102
PLK-1/8-4	4	111	125
PLK-1/8-5	5	134	148
PLK-1/8-6	6	157	171
PLK-1/8-7	7	180	194
PLK-1/8-8	8	203	217
PLK-1/8-9	9	226	240
PLK-1/8-10	10	249	263

Material

Description	Material
P-supply manifold	Al, anodized
Mounting bracket	Steel, passivated
Screws	Galvanized steel
O-ring	Oil-resist. rubber

Accessories

Description	**Order No.**
Complete cover plate	**PD 34694**
Flow divider	**PD 37155**

P-supply manifolds reduce and simplify tubing. They allow a space-saving and clear, compact design. 3/2, 5/2 and 5/3 directional valves with different types of actuation can be mounted in groups of 2-10 pieces.

The use of impulse solenoid valves is only possible with P-supply manifold type PL-..

The delivery includes:
P-supply manifold
Mounting bracket
Mounting screws
O-rings

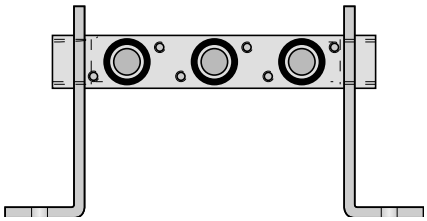

Order Instructions and Weight

Order Instructions Type	Order No.	consisting of Manifold	Bracket	Screw	O-ring	Weight (kg)
PLK-1/8-2	**PD 37174-0002**	1	2	4	2	0.28
PLK-1/8-3	**PD 37174-0003**	1	2	6	3	0.31
PLK-1/8-4	**PD 37174-0004**	1	2	8	4	0.34
PLK-1/8-5	**PD 37174-0005**	1	2	10	5	0.37
PLK-1/8-6	**PD 37174-0006**	1	2	12	6	0.40
PLK-1/8-7	**PD 37174-0007**	1	2	14	7	0.43
PLK-1/8-8	**PD 37174-0008**	1	2	16	8	0.47
PLK-1/8-9	**PD 37174-0009**	1	2	18	9	0.50
PLK-1/8-10	**PD 37174-0010**	1	2	20	10	0.53

For product group list of directional valves see 3.42.001E

A1P144E00FX40X

The right to introduce technical modifications is reserved

HOERBIGER ORIGA

Dimensions (mm)

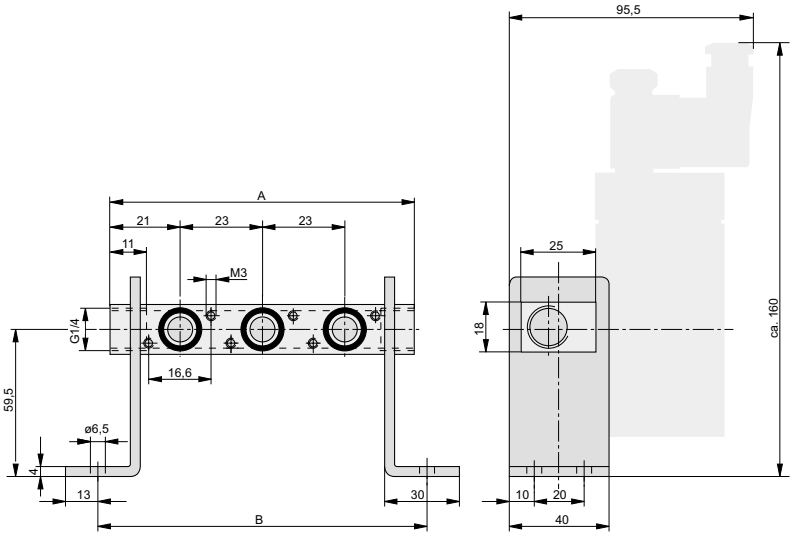

Drawing shows: PL-1/8-3

Dimension Table (mm)

Type	No. of valves	A	B
PL-1/8-2	2	65	79
PL-1/8-3	3	88	102
PL-1/8-4	4	111	125
PL-1/8-5	5	134	148
PL-1/8-6	6	157	171
PL-1/8-7	7	180	194
PL-1/8-8	8	203	217
PL-1/8-9	9	226	240
PL-1/8-10	10	249	263

Material

Description	Material
P-supply manifold	Al, anodized
Mounting bracket	Steel, passivated
Screws	Galvanized steel
O-ring	Oil-resist. rubber

Accessories

Description	**Order No.**
Complete cover plate	**PD 34694**
Flow divider	**PD 37155**

Order Instructions and Weight

Order Instructions Type	Order No.	consisting of Manifold	Bracket	Screw	O-ring	Weight (kg)
PL-1/8-2	**PD 32763-0002**	1	2	4	2	0.28
PL-1/8-3	**PD 32763-0003**	1	2	6	3	0.31
PL-1/8-4	**PD 32763-0004**	1	2	8	4	0.34
PL-1/8-5	**PD 32763-0005**	1	2	10	5	0.37
PL-1/8-6	**PD 32763-0006**	1	2	12	6	0.40
PL-1/8-7	**PD 32763-0007**	1	2	14	7	0.43
PL-1/8-8	**PD 32763-0008**	1	2	16	8	0.47
PL-1/8-9	**PD 32763-0009**	1	2	18	9	0.50
PL-1/8-10	**PD 32763-0010**	1	2	20	10	0.53

For product group list see 3.42.001E

RPS-Supply Manifolds

for directional valves of the S9-1/8 Series

Series RPSL-S9-1/8-..

Dimensions (mm)

For dimensions A and B see table

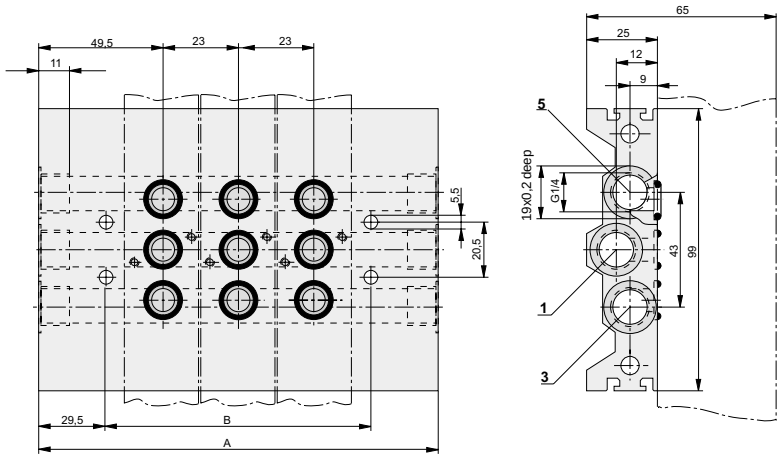

Drawing shows: RPSL-S9-1/8-3

Dimension Table (mm)

Type	No. of valves	A	B
RPSL-S9-1/8-2	2	122	63
RPSL-S9-1/8-3	3	145	86
RPSL-S9-1/8-4	4	168	109
RPSL-S9-1/8-5	5	191	132
RPSL-S9-1/8-6	6	214	155
RPSL-S9-1/8-7	7	237	178
RPSL-S9-1/8-8	8	260	201
RPSL-S9-1/8-9	9	283	224
RPSL-S9-1/8-10	10	306	247

Material

Description	Material
RPS-supply mani.	Al, anodized
Screws	Galvanized steel
O-ring	Oil-resist. rubber

Accessories

Description	**Order No.**
Complete cover strip	**PD 32956**
Flow divider	**PD 37155**

RPS-supply manifolds reduce and simplify tubing. They allow a space-saving and clear, compact design. The RPS manifolds have a common compressed air supply (P) and common vent lines (R, S). Valves can be mounted in groups of 2-10.

The delivery includes:
RPS-supply manifold
Mounting screws
O-rings

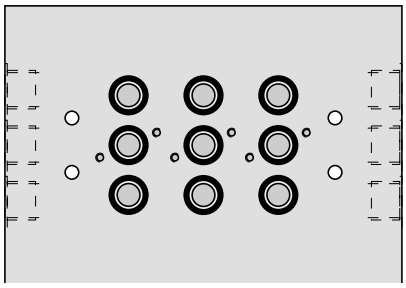

Order Instructions and Weights

Order Instructions Type	Order No.	consisting of Manifold	Screws	O-rings	Weight (kg)
RPSL-S9-1/8-2	**PD 44813-0002**	1	4	6	0.47
RPSL-S9-1/8-3	**PD 44813-0003**	1	6	9	0.57
RPSL-S9-1/8-4	**PD 44813-0004**	1	8	12	0.67
RPSL-S9-1/8-5	**PD 44813-0005**	1	10	15	0.77
RPSL-S9-1/8-6	**PD 44813-0006**	1	12	18	0.87
RPSL-S9-1/8-7	**PD 44813-0007**	1	14	21	0.97
RPSL-S9-1/8-8	**PD 44813-0008**	1	16	24	1.07
RPSL-S9-1/8-9	**PD 44813-0009**	1	18	27	1.17
RPSL-S9-1/8-10	**PD 44813-0010**	1	20	30	1.27

For product group list see 3.42.001E

A1P146E00JAA40X

The right to introduce technical modifications is reserved

HOERBIGER ORIGA

5/2 Way Valve

G1/8

with NAMUR connections

Actuation:
Electrically pilot operated with standard solenoids
- by permanent signal
- by impulse

Series S9

S9 581..-1/8 SO

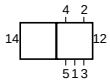

Characteristics to VDI 3290 Pressures quoted as gauge pressure

Characteristics		Symbol	Unit	Description	
General Features					
Type				Spool valve	
Mounting				2 screws M5	
Tube connection				Thread	
Port size				G 1/8; 7.4 deep (connections 1, 3, 5)	
Weight (mass)			kg	0.280 - permanent signal version 0.415 - impulse version	
Installation				In any position	
Ambient temperature range		ϑ_{min} ϑ_{max}	°C °C	-10 +60	Note: When using below freezing
Medium temperature range		ϑ_{min} ϑ_{max}	°C °C	-10 +70	point (°C) it is necessary to consult us.
Medium				Filtered compressed air	
Lubrication				With or without oil mist lubrication [1]	
Pneumatic Characteristics					
Nominal pressure		p_n	bar	6	
Operating pressure range		p_{min} p_{max}	bar bar	Permanent signal version 2 10	
		p_{min} p_{max}	bar bar	Impulse version 1.5 10	
Nominal flow		Q_N	l/min	500	
Actuation					
Electrical				Pilot operated	
Voltage				AC	DC
Nominal voltage*	Standard version	U_n	V	220	24
	Low watt. version	U_n	V	220	24
	Ex-proof-version **	U_n	V	220	24
				Further voltages available on request	
Initial power consumption	Standard version		VA (W)	8.5	2.5
	Low watt. version		VA (W)	6.6	2.1
	Ex-proof-version **		VA (W)	5.0	5.1
Continuous consumption	Standard version		VA (W)	6.0	2.5
	Low watt. version		VA (W)	3.9	2.1
	Ex-proof-version **		VA (W)	5.0	5.1
Duty cycle		ED	%	100	
Electrical protection				IP65 to DIN 40050 (with plug)	
Insulating material				F (Ex-version E) to VDE 0580	
Connection				Plug to DIN 43650 form B[2] Ex-version: cable 1200 mm long	

* See Order Instructions for details
** For explosion-proof versions different technical requirements apply, according to Declaration of Conformity
[1] We recommend the use of mineral oil type VG32 to ISO 3448
[2] Plug for low wattage version available in DIN 43650 form A

The delivery includes:
1 Valve
2 Mounting screws
1 Coding pin
2 O-rings

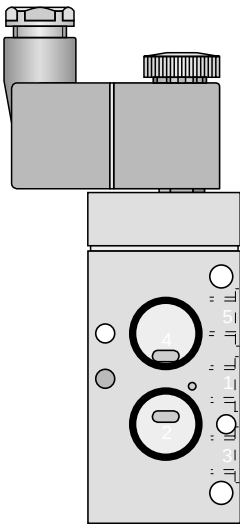

A1P425E00JAA40X

The right to introduce technical modifications is reserved

For product group list see 3.42.001E

Data Sheet No. 3.42.500E-1

HOERBIGER ORIGA

Dimensions (mm)

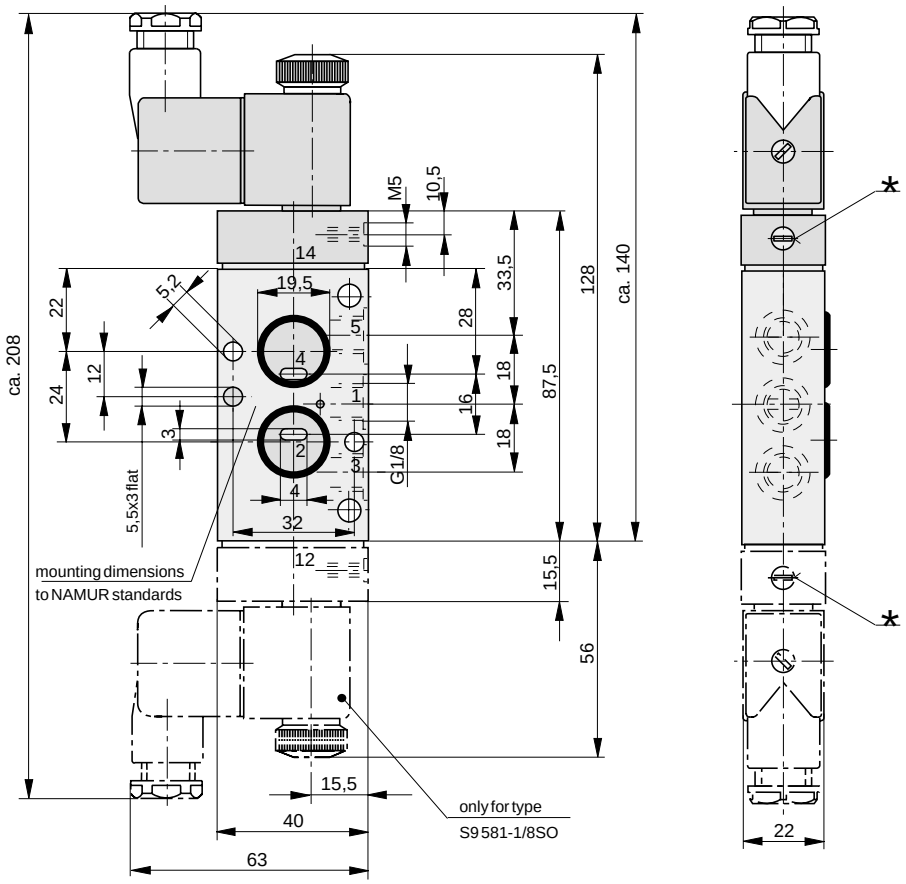

* Manual override can be mounted on either side.

Order Instructions

Actuation	Return	Symbol	Order Instructions Type	Order No.
Electrical by permanent signal	Spring return	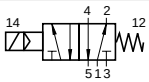	**S9 581RF-1/8 SO-..**	**PD 34143-..33**
Electrical by impulse	Electrical by impulse	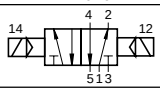	**S9 581-1/8 SO-..**	**PD 34984-..33**

Solenoid version	Nominal voltage	Applicable for	Key code
Standard version	220 V/50 (60) Hz	110 V=	61
	24 V=	60 V/50 (60) Hz	02
Low wattage coil version	24 V=		13
	220 V/50 (60) Hz		69
Ex-proof version *	24 V=		48
	220 V/50 (60) Hz		98

* For explosion-proof versions different technical requirements apply, according to Declaration of Conformity

Further voltages available on request.

5/2 Way Valve

G1/8

for two-hand safety operation

Actuation: pneumatic

Series S9

S9 563/65RF-1/8-SO

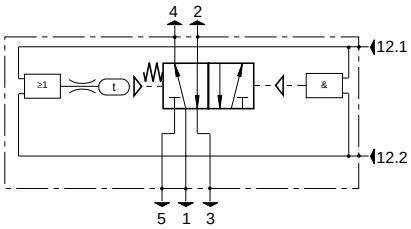

2-hand safety valve for pneumatically controlled machines and equipment.

- The valve switches from outlet 4 to outlet 2 only if both signal inputs are actuated simultaneously or within 0.5 s.
- The valves will not switch again until both signal inputs are stopped.
- For the safety of operating personnel in manufacturing processes such as pressing, bending, stamping, deburring etc.
- Not suitable for control systems of eccentric or similar presses.

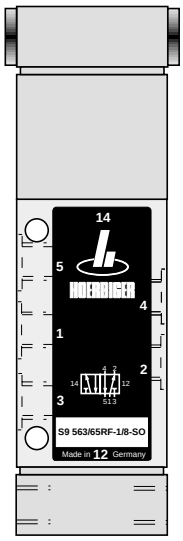

Characteristics to VDI 3290			Pressures quoted as gauge pressure
Characteristics	Symbol	Unit	Description
General Features			
Type			Spool valve
Mounting			2 screws M5 (M3)
Tube connection			Thread
Port size			G1/8
Weight (mass)		kg	0.27
Installation			In any position
Ambient temperature range	ϑ_{min} ϑ_{max}	°C °C	-10 +60
Medium temperature range	ϑ_{min} ϑ_{max}	°C °C	-10 +70
Medium			Filtered compressed air
Lubrication			With or without oil mist lubrication [1]
Pneumatic Characteristics			
Nominal pressure	p_n	bar	6
Operating pressure range	p_{min} p_{max}	bar bar	0 10
Nominal flow	Q_N	l/min	500
Actuation			
Pneumatic			Direct
Actuating pressure range	$p_{st\,min}$ $p_{st\,max}$	bar bar	2 10

Note: When using below freezing point (°C) it is necessary to consult us.

[1] We recommend the use of mineral oil type VG32 to ISO 3448

Dimensions (mm)

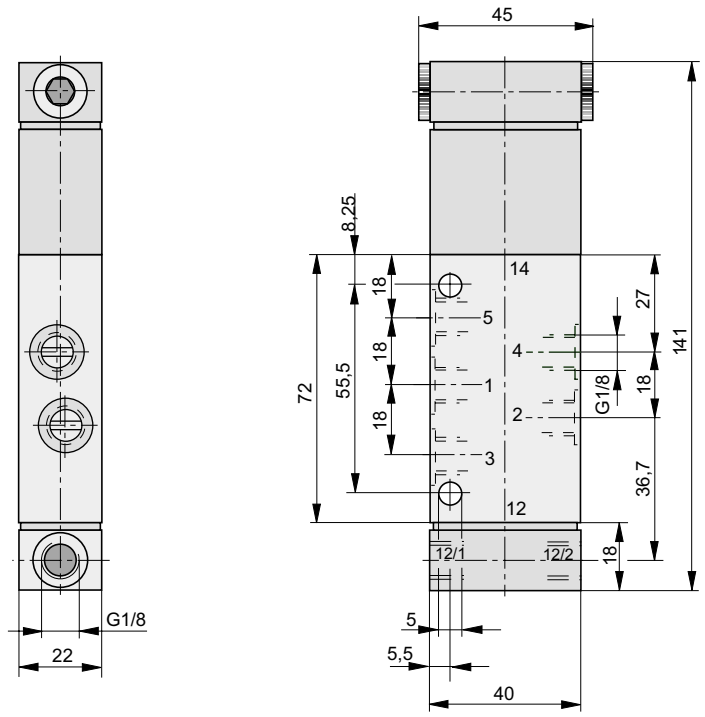

Order Instructions: S9 563/65RF-1/8-SO PD 37673

Datenblatt 3.42.546

A1P519E00IX00X

The right to introduce technical modifications is reserved

HOERBIGER ORIGA

Pressure Switches

G1/8

pneumatic

Series ZV.+06

ZVP+06

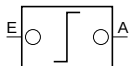

ZVN-06

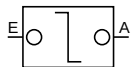

Characteristics			Pressures quoted as gauge pressure	
Characteristics	Symbol	Unit	Description	
General Features				
System			Poppet valve	
Mounting			With mounting bracket on device	
Tube connection			E,P,A threaded; exhaust unthreaded	
Port size			G1/8	
Weight (mass)		kg	0.2	
Installation			In any position	
Ambient temperature range	ϑ_{min} ϑ_{max}	°C °C	-20 +80	Note: When using below freezing point (°C) it is necessary to consult us
Medium temperature range	ϑ_{min} ϑ_{max}	°C °C	-20 +80	
Medium			Filtered compressed air, unlubricated	
Lubrication			Oil mist lubrication compatible with Buna N	
Pneumatic Characteristics				
Type			**ZVP+06**	**ZVN-06**
K_v-value	K_v	m^3/h	0.14	0.07
Operating pressure range	p_{min} p_{max}	bar bar	0 16	

Examples of Applications

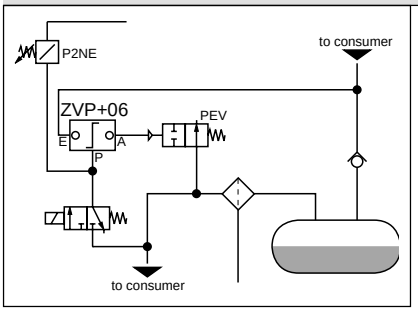

Application example of ZVN+06 as AND-function in a rotary compressor control. Connection details: the exhaust valve PEV opens via solenoid valve S9 during idle running and by means of the discharge pressure when switching off.

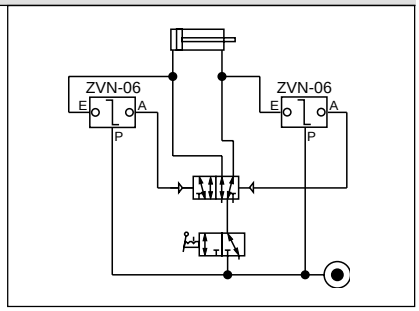

Example of a cylinder control with ZVN-06 as contactless limit switch.

Pneumatic pressure switches ZVP and ZVN are used in automatic control and monitoring systems for various purposes:

for pressure increase, because only a low operating pressure is needed.

for amplifying volume in control and monitoring systems

for logic circuit functions IDENTITY, AND by ZVP and NOR, INHIBITION by ZVN

as contactless limit switches in cylinder controls

as pressure switches with fixed switching point for monitoring both pressure and pressure failure

Function

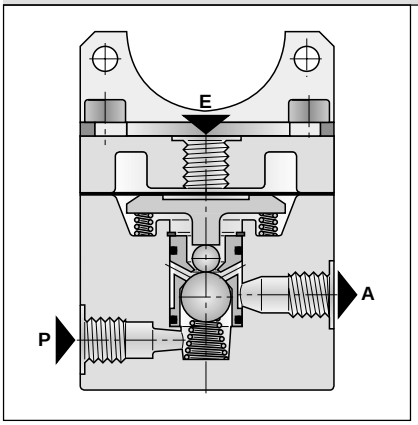

Type ZVP+06
When the incoming signal E (actuating air pressure) exceeds the switching point, the pressure switch ZVP gives a signal A equal to the level of the air supply pressure (P). Outlet A is exhausted when the signal drops below the reactuating point.

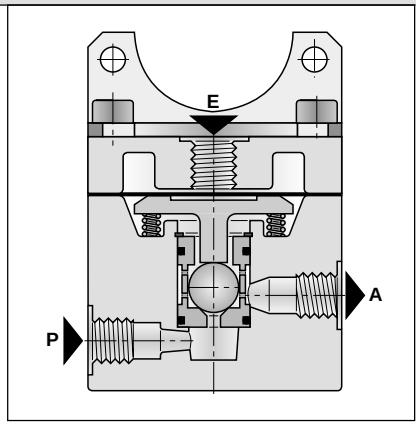

Type ZVN-06
When the incoming signal E (actuating air pressure) drops below the switching pressure, the pressure switch ZVN gives a signal A equal to the level of the air supply pressure (P). Outlet A is exhausted when the signal exceeds the reactuating point.

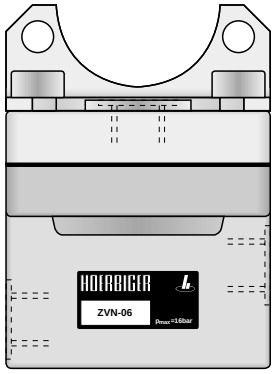

Data Sheet No. 3.42.590E-1

A1P142E00FX40X

The right to introduce technical modifications is reserved

Inlet Pressure (E) ZVP+06

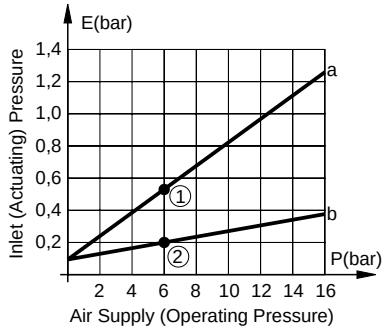

a = Outlet A is pressurized when the inlet signal E exceeds this pressure (switch-on).
b = Outlet A is exhausted when the inlet signal E falls below this pressure (switch-off).

Reading example for P = 6 bar
1 = switch-on point at E = 0.55 bar
2 = switch-off point at E = 0.20 bar

Inlet Pressure (E) ZVN-06

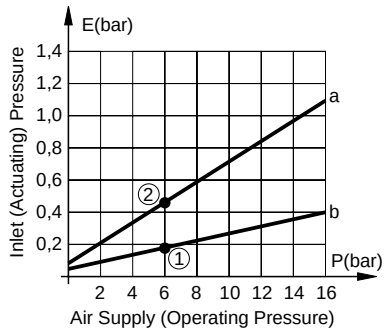

a = Outlet A is exhausted when the inlet signal E exceeds this pressure (switch-on).
b = Outlet A is pressurized when the inlet signal E falls below this pressure (switch-off).

Reading example for P = 6 bar
1 = switch-on point at E = 0.18 bar
2 = switch-off point at E = 0.46 bar

Flow Characteristics

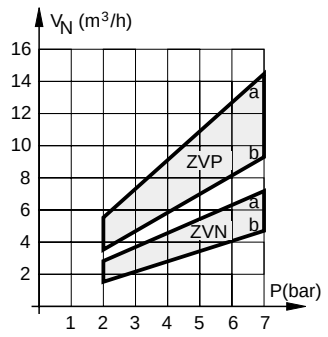

a = for supercritical discharge
b = at A = 90% supply air (abs.)

Dimensions (mm)

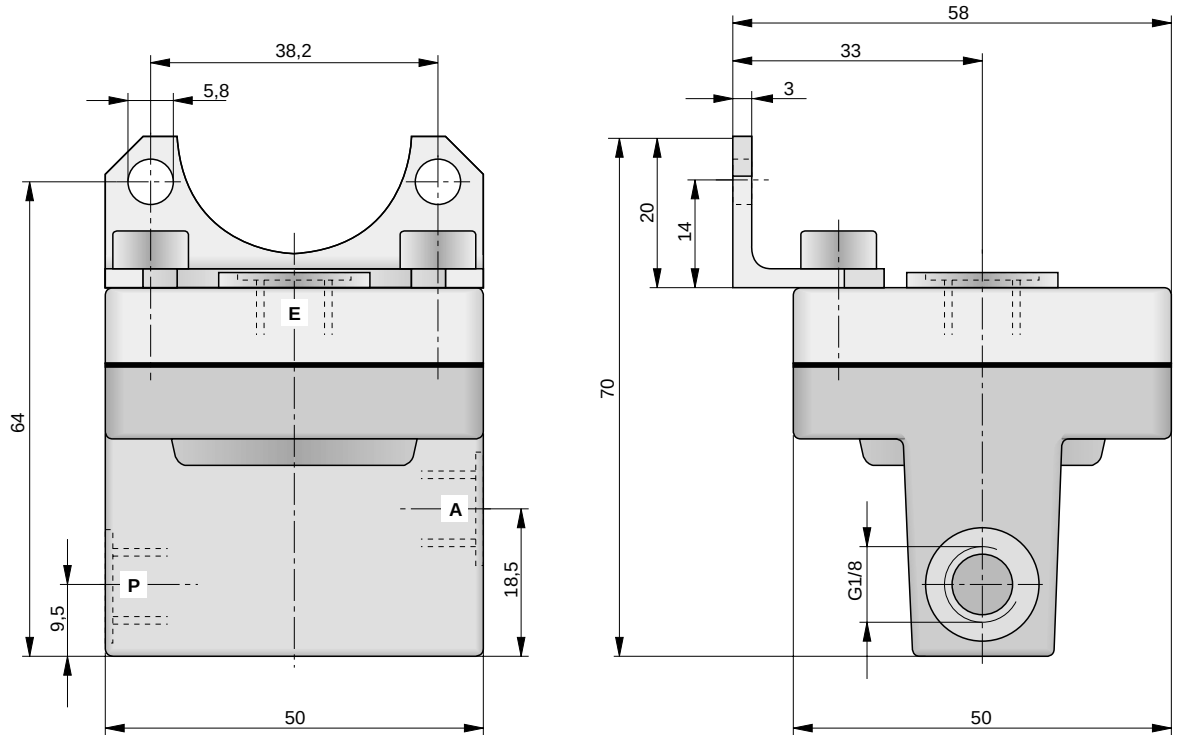

Order Instructions

Version	Order Instructions Type	Order No.
Outlet A is pressurized if the incoming signal exceeds the switching point	**ZVP+06**	**20-529 842**
Outlet A is pressurized if the incoming signal drops below the switching point	**ZVN-06**	**20-529 841**

PNEUMATIC
GROUP

3/2, 5/2 AND 5/3 WAY VALVES
VALVE ISLANDS
SPECIAL VALVES
SERIES S9 - G1/4

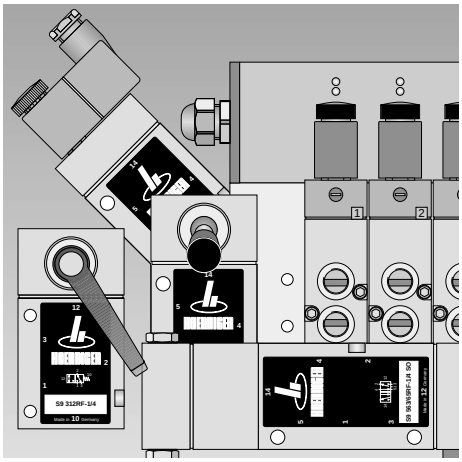

HOERBIGER
ORIGA

3/2 Way Valves - Standard Versions				
Actuation	Symbol	Order Instructions Type	Order No.	Data Sheet No.
Hand lever, indexed	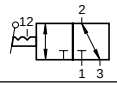	**S9 311-1/4**	**PA 12708**	3.52.002E
Hand lever, spring return	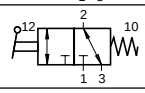	**S9 311RF-1/4**	**PA 12709**	3.52.002E
Hand lever secured in 2 switching positions	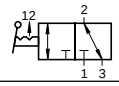	**S9 311S-1/4**	**PA 12710**	3.52.003E
Rotary lever, indexed	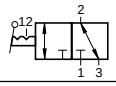	**S9 312-1/4**	**PA 12711**	3.52.004E
Rotary lever, spring return	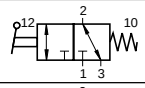	**S9 312RF-1/4**	**PA 12712**	3.52.004E
Pneumatic by permanent signal	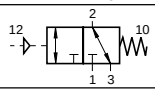	**S9 361RF-1/4**	**PA 12713**	3.52.005E
Pneumatic by impulse	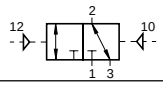	**S9 361-1/4**	**PA 12714**	3.52.005E
Pneumatic by impulse differential piston	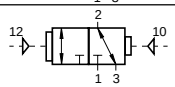	**S9 362-1/4**	**PA 12715**	3.52.005E
Electrical by permanent signal	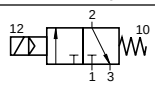	**S9 381RF-1/4-NG-..**	**PA 12716-..33**	3.52.006E
	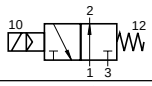	**S9 381RF-1/4-NO-..**	**PA 12717-..33**	3.52.006E
with external pilot air	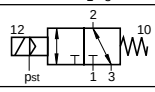	**S9 381S-RF-1/4-..**	**PA 12719-..33**	3.52.006E
Electrical by impulse	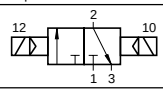	**S9 381-1/4-..**	**PA 12718-..33**	3.52.006E
with external pilot air	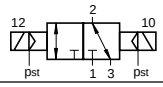	**S9 381S-1/4-..**	**PA 12720-..33**	3.52.006E
Electrical by impulse differential piston	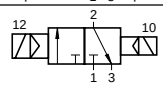	**S9 382-1/4-..**	**PA 12721-..33**	3.52.006E
with external pilot air	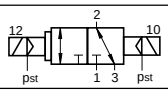	**S9 382S-1/4-..**	**PA 12722-..33**	3.52.006E

Solenoid version	Nominal voltage	Applicable for	Key code
Standard version	220 V/50 (60) Hz	110 V=	61
	24 V=	48 V/50 (60) Hz	02
Low wattage version	24 V=		13
	220 V/50 (60) Hz		69
Ex-proof version *	24 V=		48
	220 V/50 (60) Hz		98

* For explosion-proof versions different technical requirements apply, according to Declaration of Conformity

Further voltages available on request.

5/2 Way Valves - Standard Versions				
Actuation	Symbol	Order Instructions Type	Order No.	Data Sheet No.
Hand lever, indexed	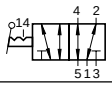	**S9 511-1/4**	**PA 12671**	3.52.050E
Hand lever, spring return	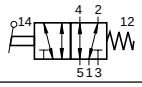	**S9 511RF-1/4**	**PA 12672**	3.52.050E
Hand lever secured in 2 switching positions	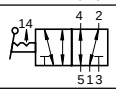	**S9 511S-1/4**	**PA 12673**	3.52.051E
Rotary lever, indexed	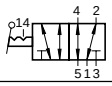	**S9 512-1/4**	**PA 12674**	3.52.052E
Rotary lever, spring return	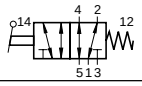	**S9 512RF-1/4**	**PA 12675**	3.52.052E
Pneumatic by permanent signal	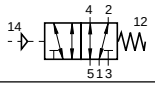	**S9 561RF-1/4**	**PA 12676**	3.52.053E
Pneumatic by impulse	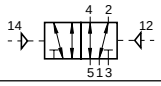	**S9 561-1/4**	**PA 12677**	3.52.053E
Pneumatic by impulse differential piston	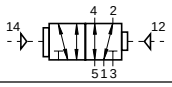	**S9 562-1/4**	**PA 12678**	3.52.053E
Electrical by permanent signal	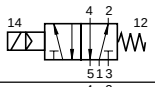	**S9 581RF-1/4-..**	**PA 12679-..33**	3.52.054E
with external pilot air	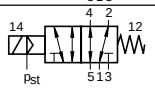	**S9 581S-RF-1/4-..**	**PA 12681-..33**	3.52.054E
Electrical by impulse	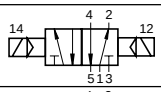	**S9 581-1/4-..**	**PA 12680-..33**	3.52.054E
with external pilot air	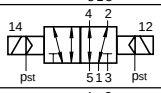	**S9 581S-1/4-..**	**PA 12682-..33**	3.52.054E
Electrical by impulse differential piston	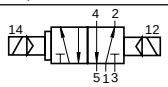	**S9 582-1/4-..**	**PA 12683-..33**	3.52.054E
with external pilot air	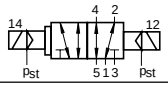	**S9 582S-1/4-..**	**PA 12684-..33**	3.52.054E

Solenoid version	Nominal voltage	Applicable for	Key code
Standard version	220 V/50 (60) Hz	110 V=	61
	24 V=	48 V/50 (60) Hz	02
Low wattage version	24 V=		13
	220 V/50 (60) Hz		69
Ex-proof version *	24 V=		48
	220 V/50 (60) Hz		98

* For explosion-proof versions different technical requirements apply, according to Declaration of Conformity

Further voltages available on request.

5/3 Way Valves - Standard Versions				
Actuation	Symbol	Order Instructions Type	Order No.	Data Sheet No.
Hand lever, indexed in 3 operating positions	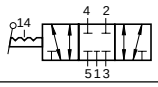	**S9 511G-1/4**	**PA 12687**	3.52.100E
	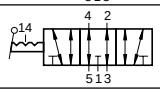	**S9 511E-1/4**	**PA 12688**	3.52.100E
	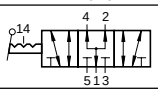	**S9 511B-1/4**	**PA 12689**	3.52.100E
Hand lever, spring return to middle position	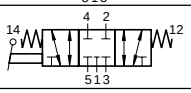	**S9 511RFG-1/4**	**PA 12690**	3.52.100E
	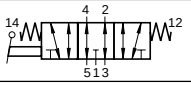	**S9 511RFE-1/4**	**PA 12691**	3.52.100E
	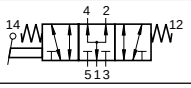	**S9 511RFB-1/4**	**PA 12692**	3.52.100E
Safety hand lever, secured in 3 operating positions	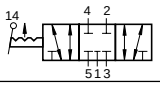	**S9 511SG-1/4**	**PA 12693**	3.52.101E
	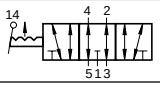	**S9 511SE-1/4**	**PA 12694**	3.52.101E
	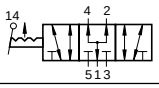	**S9 511SB-1/4**	**PA 12695**	3.52.101E
Rotary lever, indexed in 3 operating positions	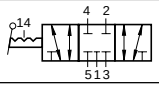	**S9 512G-1/4**	**PA 12696**	3.52.102E
	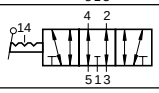	**S9 512E-1/4**	**PA 12697**	3.52.102E
	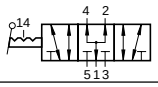	**S9 512B-1/4**	**PA 12698**	3.52.102E
Rotary lever, spring return to middle position	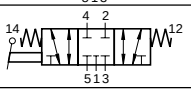	**S9 512RFG-1/4**	**PA 12699**	3.52.102E
	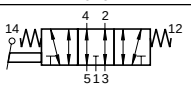	**S9 512RFE-1/4**	**PA 12700**	3.52.102E
	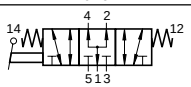	**S9 512RFB-1/4**	**PA 12701**	3.52.102E
Pneumatic by permanent signal, spring return to middle position	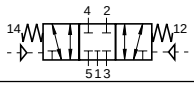	**S9 561RFG-1/4**	**PA 12702**	3.52.103E
	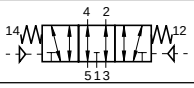	**S9 561RFE-1/4**	**PA 12703**	3.52.103E
	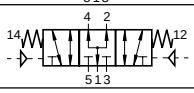	**S9 561RFB-1/4**	**PA 12704**	3.52.103E
Electrical by permanent signal, spring return to middle position	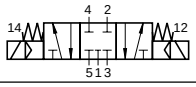	**S9 581RFG-1/4-..**	**PA 12705-..33**	3.52.104E
	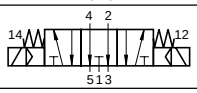	**S9 581RFE-1/4-..**	**PA 12706-..33**	3.52.104E
	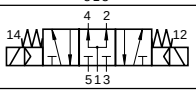	**S9 581RFB-1/4-..**	**PA 12707-..33**	3.52.104E

See page 2 for nominal voltage information

See page 2 for key code information

Special Valves					
Description	Actuation	Symbol	Order Instructions Type	Order No.	Data Sheet No.
5/2 way valve with NAMUR connection	Electrical, permanent signal	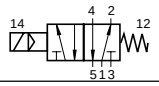	**S9 581RF-1/4-SO-..**	**PD 34985-..33**	3.52.500E
	Electrical, impulse	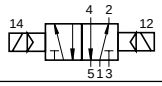	**S9 581-1/4-SO-..**	**PD 34986-..33**	3.52.500E
5/2 way oscillating valve	Pneumatic	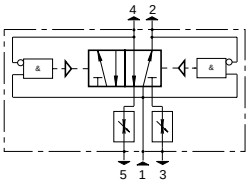	**S8 568/68-1/4-SO**	**PD 28112**	3.52.545E
5/2 way valve for two-handed safety operation	Pneumatic	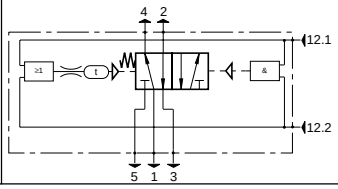	**S8 563/65RF--1/4-SO**	**PD 28181**	3.52.546E

Valves for Foot Operation					
Description	Actuation	Symbol	Order Instructions Type	Order No.	Data Sheet No.
3/2 way valve	Pedal, spring return	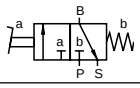	**F 331RF-08 NG***	**KZ 4410**	3.52.800E
		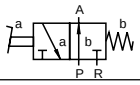	**F 331RF-08 NO***	**KZ 4411**	
	Pedal, indexed	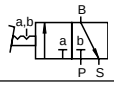	**F 331-08 NG***	**KZ 4408**	
		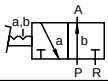	**F 331-08 NO***	**KZ 4409**	
5/2 way valve	Pedal, spring return	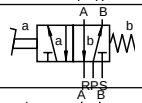	**F 531RF-08**	**KZ 4413**	3.52.801E
	Pedal, indexed	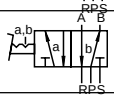	**F 531-08**	**KZ 4412**	

* NG = normally closed
NO = normally open

For P-supply manifolds see 3.52.450E
For RPS manifolds see 3.52.455E

Valve Combinations with Logic Elements - 3/2, 5/2 and 5/3 Way Valves

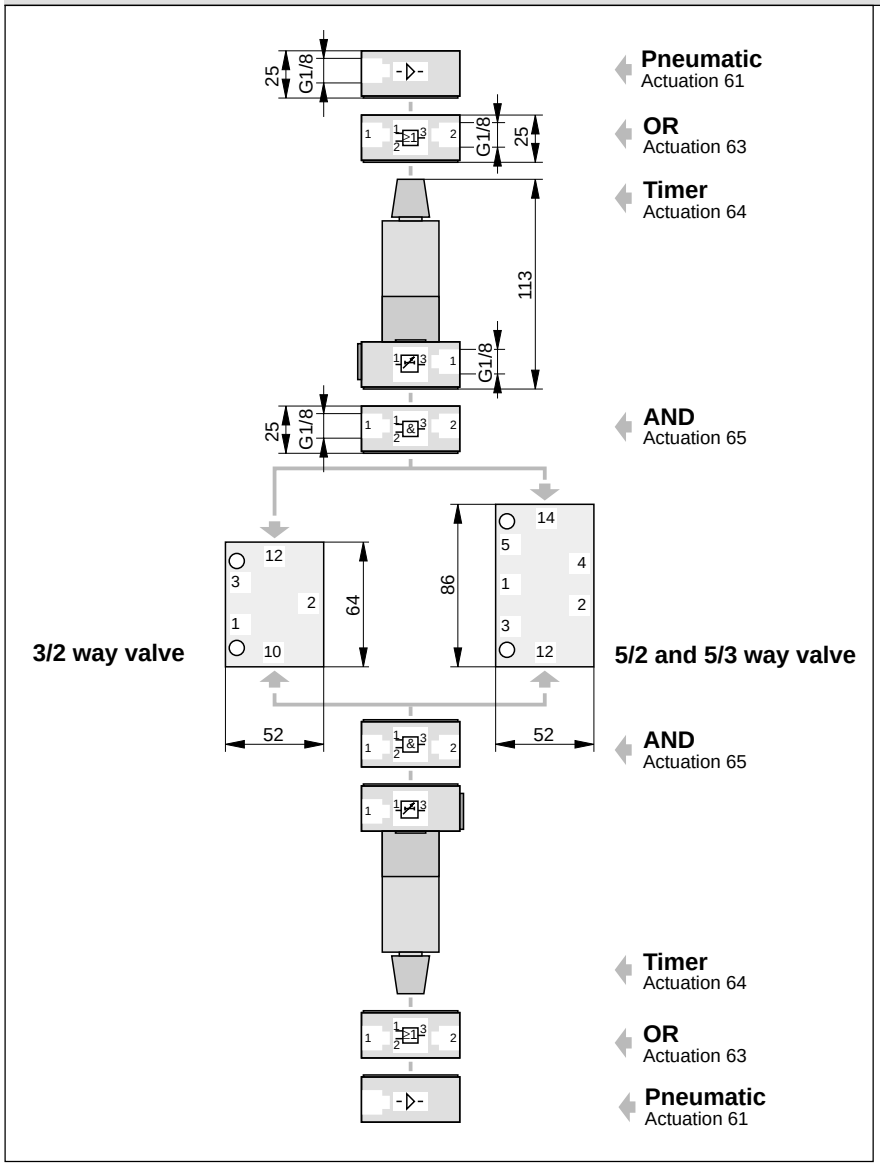

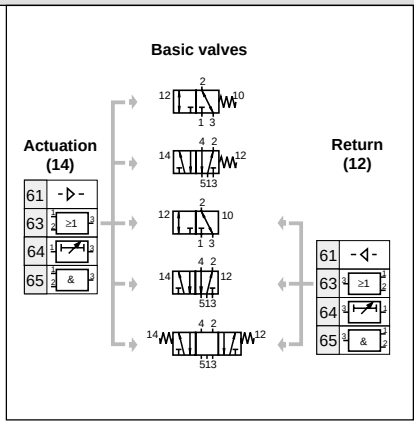

Order Instructions	S9	5	63 / 65	RFG	1/4	Ordering Example

Version	
3	3 way valve
5	5 way valve

Middle position function (only with 5/3 way valve)	
RFG	closed
RFE	vented
RFB	pressurized

Actuation (14)	
61	pneumatic
63	OR
64	Timer
65	AND

Return (12)	
RF	spring return
61	pneumatic
63	OR
64	Timer
65	AND

Ordering Example:
Valve island with fieldbus connection,
8 fold
equipped with:
1 bistable 5/2 valves S9 581-1/4
7 monostable 5/2 valves S9 581RF-1/4

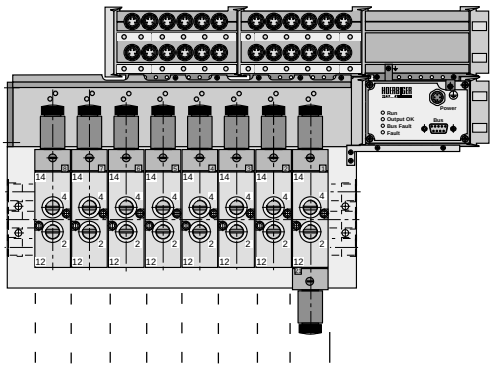

	Order No.							Electr. connection		Internal Bus-expansion	No. of Valves		Valve position 1	2	3	4	5	6	7	8	9	10	11	12	Input module	Number of inputs	Channel divider	Position of channel divider	
Ordering example	P	A	1	0	3	8	1	D	P		0	8	M	M	M	M	M	M	M	J									

4 6 8 10 12

even number of valve positions only

Important: Please specify the code for the desired valve types

Input Modules	
K	Pins IP20
S	Connector M8 IP65
04-08-12	Number of inputs
16-20-24	
28-32	

Dual Pressure Operation	
J	with channel divider in port 1 (P)
01 – 11	Position of channel divider to valve position

Valve Island – Sizes	
PA12867	Type: IM20-1/4 Connections: G1/4 – valve ports G3/8 – base plates

Electrical Connection	
Multipole Version	
DS	with Sub-D connector
HI	with industry connector
Fieldbus Version	
DP	Profibus DP
IS	Interbus S
CO	CAN Open
IB	Internal Bus

Internal Bus Expansion	
J	RIO-IF Module

Valve Positions	
04	up to 4 valves
06	5 and 6 valves
08	7 and 8 valves
10	9 and 10 valves
12	11 and 12 valves
14	13 and 14 valves
16	15 and 16 valves

Ordering Code for Valves and Blanking Plates

Code	Symbol	Description	Data Sheet
A	–	Blanking plate on valve position	For further informations, please refer to the special Data Sheets
M		5/2 way solenoid valve, permanent signal with spring return Type: S9 581RF-..	
J	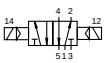	5/2 way solenoid valve, Impulse version Type: S9 581-..	
G	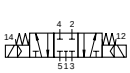	5/3 way solenoid valve, spring return to middle position, middle position closed Type: S9 581RFG-..	
B		5/3 way solenoid valve, spring return to middle position, middle position pressurised Type: S9 581RFB-..	
E		5/3 way solenoid valve, spring return to middle position, middle position vented Type: S9 581RFE-...	

3/2 Way Valve

G1/4

Actuation: Hand lever

Serie S9

S9 311-1/4

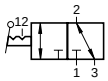

S9 311RF-1/4

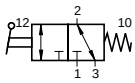

Characteristics to VDI 3290			Pressures quoted as gauge pressure	
Characteristics	Symbol	Unit	Description	
General Features				
Type			Spool valve	
Mounting			2 screws M6	
Tube connection			Thread	
Port size			G1/4; 11 deep	
Weight (mass)		kg	0.37	
Installation			In any position	
Ambient temperature range	ϑ_{min} ϑ_{max}	°C °C	-10 +60	Note: When using below freezing
Medium temperature range	ϑ_{min} ϑ_{max}	°C °C	-10 +70	point (°C) it is necessary to consult us.
Medium			Filtered compressed air	
Lubrication			With or without oil mist lubrication[1)]	
Pneumatic Characteristics				
Nominal pressure	p_n	bar	6	
Operating pressure range	p_{min} p_{max}	bar bar	0 10	
Nominal flow	Q_N	l/min	1300	
Actuation				
Manual control			Direct	
Stroke		mm	6.5	
Actuation force	F_b	N	Type S9 311-1/4: 10 Type S9 311RF-1/4: 15	

[1)] We recommend the use of mineral oil type VG32 to ISO 3448

Dimensions (mm)

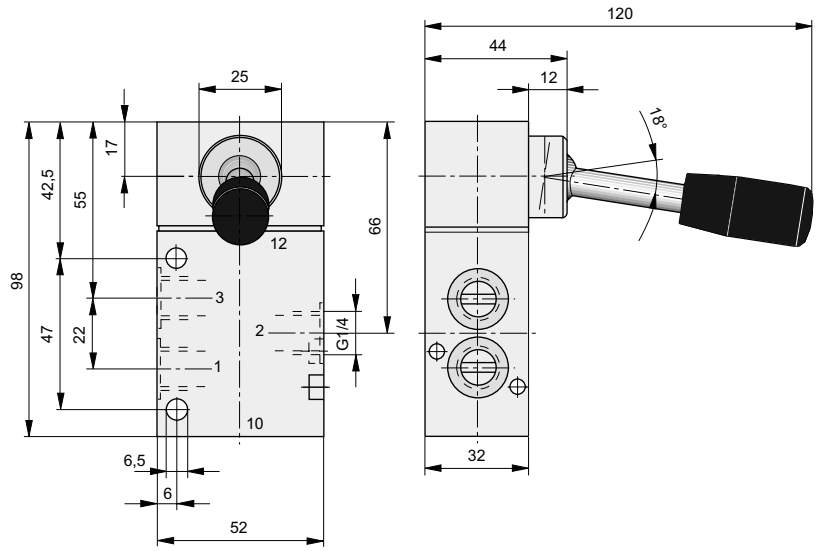

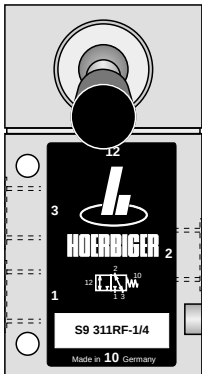

For product group list see 3.52.001E

Order Instructions:
S9 311-1/4 **PA 12708** (both lever positions indexed)
S9 311RF-1/4 **PA 12709** (with spring return)

Data Sheet No. 3.52.002E

A1P381E00FX40X

The right to introduce technical modifications is reserved

HOERBIGER ORIGA

3/2 Way Valve

G1/4

Actuation:
Safety hand lever

Series S9

S9 311S-1/4

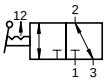

Characteristics to VDI 3290 — Pressures quoted as gauge pressure

Characteristics	Symbol	Unit	Description	
General Features				
Type			Spool valve	
Mounting			2 screws M6	
Tube connection			Thread	
Port size			G1/4; 11 deep	
Weight (mass)		kg	0.37	
Installation			In any position	
Ambient temperature range	ϑ_{min} ϑ_{max}	°C °C	-10 +60	Note: When using below freezing
Medium temperature range	ϑ_{min} ϑ_{max}	°C °C	-10 +70	point (°C) it is necessary to consult us.
Medium			Filtered compressed air	
Lubrication			With or without oil mist lubrication[1)]	
Pneumatic Characteristics				
Nominal pressure	p_n	bar	6	
Operating pressure range	p_{min} p_{max}	bar bar	0 10	
Nominal flow	Q_N	l/min	1300	
Actuation				
Manual control			Direct	
Stroke		mm	6.5	
Actuation force	F_b	N	10	

[1)] We recommend the use of mineral oil type VG32 to ISO 3448

Dimensions (mm)

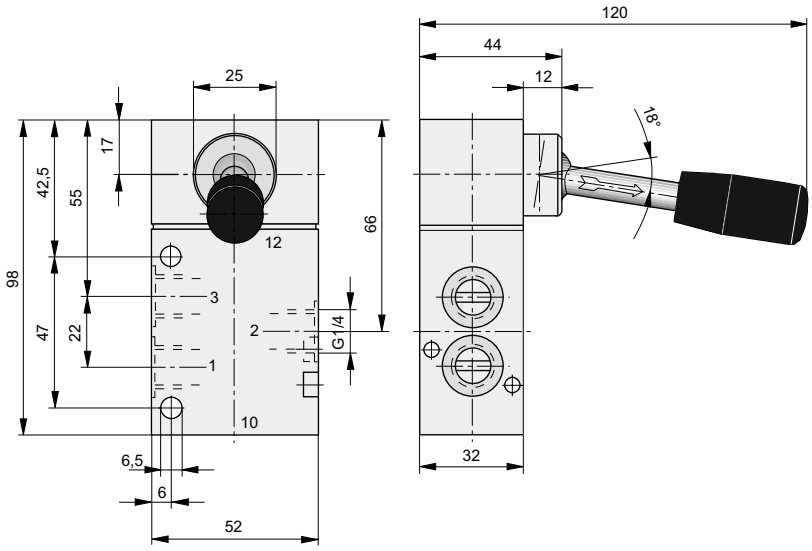

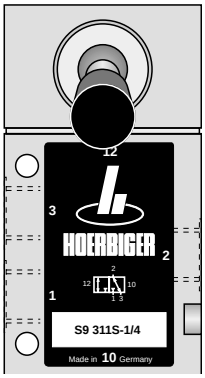

For product group list see 3.52.001E

Order Instruction:
S9 311S-1/4 **PA 12710** (both switching positions secured)

Data Sheet No. 3.52.003E

A1P382E00FX40X

The right to introduce technical modifications is reserved

HOERBIGER ORIGA

3/2 Way Valve

G1/4

Actuation: Rotary lever

Series S9

S9 312-1/4

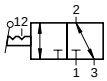

S9 312RF-1/4

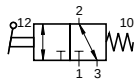

Characteristics to VDI 3290			Pressures quoted as gauge pressure	
Characteristics	Symbol	Unit	Description	
General Features				
Type			Spool valve	
Mounting			2 screws M6	
Tube connection			Thread	
Port size			G1/4; 11 deep	
Weight (mass)		kg	0.37	
Installation			In any position	
Ambient temperature range	ϑ_{min} ϑ_{max}	°C °C	-10 +60	Note: When using below freezing point (°C) it is necessary to consult us.
Medium temperature range	ϑ_{min} ϑ_{max}	°C °C	-10 +70	
Medium			Filtered compressed air	
Lubrication			With or without oil mist lubrication[1)]	
Pneumatic Characteristics				
Nominal pressure	p_n	bar	6	
Operating pressure range	p_{min} p_{max}	bar bar	0 10	
Nominal flow	Q_N	l/min	1300	
Actuation				
Manual control			Direct	
Stroke		mm	6.5	
Actuation force	F_b	N	Type S9 312-1/4: 10 Type S9 312RF-1/4: 15	

[1)] We recommend the use of mineral oil type VG32 to ISO 3448

Dimensions (mm)

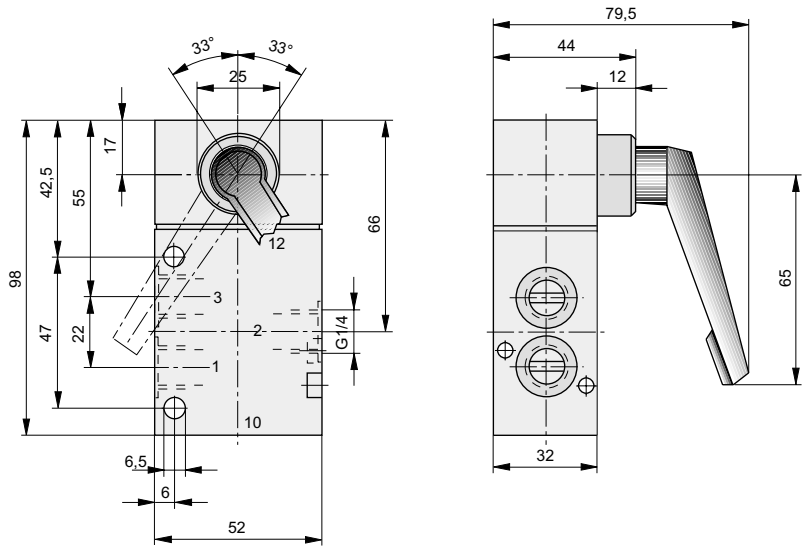

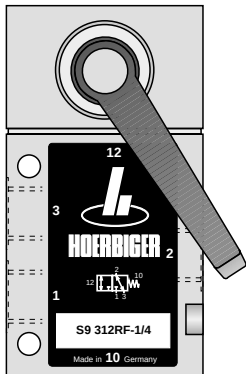

For product group list see 3.52.001E

Order Instructions:
S9 312-1/4 **PA 12711** (both lever positions indexed)
S9 312RF-1/4 **PA 12712** (with spring return)

Data Sheet No. 3.52.004E

A1P383E00FX40X

The right to introduce technical modifications is reserved

HOERBIGER ORIGA

3/2 Way Valve

G1/4

Actuation:
Pneumatic
- by permanent signal
- by impulse

Series S9

S9 36.

Characteristics to VDI 3290	Pressures quoted as gauge pressure			
Characteristics	Symbol	Unit	Description	
General Features				
Type			Spool valve	
Mounting			2 screws M6 (M4)	
Tube connection			Thread	
Port size			G 1/4; 11 deep	
Weight (mass)		kg	0.37 - permanent signal version 0.43 - impulse version	
Installation			In any position	
Ambient temperature range	ϑ_{min} ϑ_{max}	°C °C	-10 +60	Note: When using below freezing point (°C) it is necessary to consult us.
Medium temperature range	ϑ_{min} ϑ_{max}	°C °C	-10 +70	
Medium			Filtered compressed air	
Lubrication			With or without oil mist lubrication [1]	
Pneumatic Characteristics				
Nominal pressure	p_n	bar	6	
Operating pressure range	p_{min} p_{max}	bar bar	0 10	
Nominal flow	Q_N	l/min	1300	
Actuation				
Pneumatic			Direct	
Actuation pressure range	$p_{st\ min}$ $p_{st\ max}$	bar bar	Permanent signal version 2 10	
	$p_{st\ min}$ $p_{st\ max}$	bar bar	Impulse version 1.5 (361) 10	2 (362)

[1] We recommend mineral oil type VG32 to ISO 3448

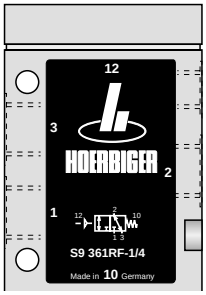

For product group list see 3.52.001E

Data Sheet No. 3.52.005E-1

A1P384E00FX40X

The right to introduce technical modifications is reserved

HOERBIGER ORIGA

Dimensions (mm)

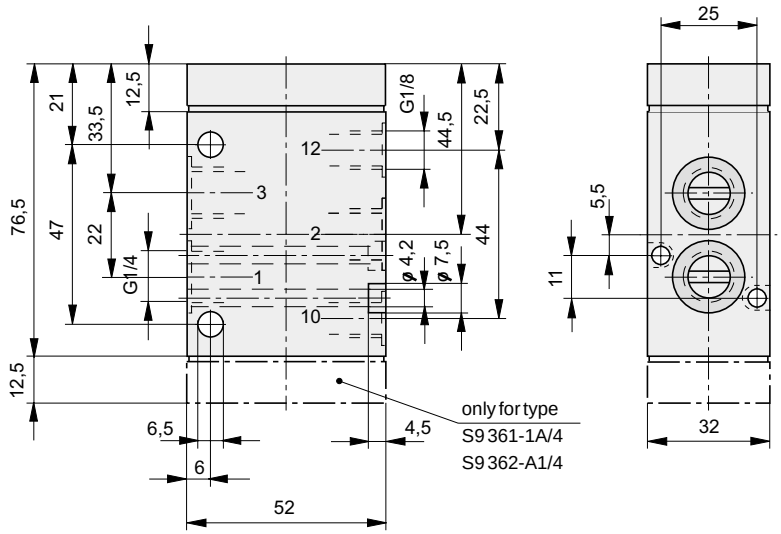

Order Instructions

Actuation	Return	Symbol	Order Instructions Type	Order No.
Pneumatic by permanent signal	Spring return	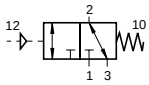	**S9 361RF-1/4**	**PA 12713**
Pneumatic by impulse	Pneumatic by impulse	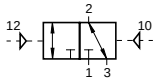	**S9 361-1/4**	**PA 12714**
Pneumatic by impulse, differential piston	Pneumatic by impulse	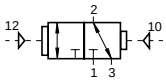	**S9 362-1/4**	**PA 12715**

3/2 Way Valve

G1/4

Actuation:
Electrically pilot operated with standard solenoids
- by permanent signal
- by impulse

Series S9

S9 38.

Variants:
S = with external pilot air

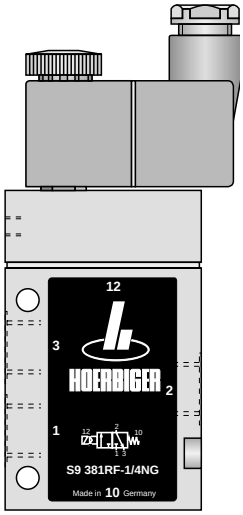

Characteristics to VDI 3290			Pressures quoted as gauge pressure	
Characteristics	Symbol	Unit	Description	
General Features				
Type			Spool valve	
Mounting			2 screws M6 (M4)	
Tube connection			Thread	
Port size			G 1/4; 11 deep	
Weight (mass)		kg	0.5 - permanent signal version 0.6 - impulse version	
Installation			In any position	
Ambient temperature range	ϑ_{min} ϑ_{max}	°C °C	-10 +60	Note: When using below freezing
Medium temperature range	ϑ_{min} ϑ_{max}	°C °C	-10 +70	point (°C) it is necessary to consult us.
Medium			Filtered compressed air	
Lubrication			With or without oil mist lubrication[1)]	
Pneumatic Characteristics				
Nominal pressure	p_n	bar	6	
Operating pressure range	p_{min} p_{max}	bar bar	Permanent signal version 2 10	(0-10 Type S)
	p_{min} p_{max}	bar bar	Impulse version 1.5 (381) | 2 (382) 10	
Nominal flow	Q_N	l/min	1300	
Actuation				
Electrical			Pilot operated, pilot operated with external pilot air	
Actuation pressure range (Type S)	$p_{st\ min}$ $p_{st\ max}$	bar bar	Permanent signal version 2 10	
	$p_{st\ min}$ $p_{st\ max}$	bar bar	Impulse version 1.5 (381) 10	2.5 (382)
Voltage			AC	DC
Nominal voltage* — Standard version	U_n	V	220	24
Nominal voltage* — Low watt. version	U_n	V	220	24
Nominal voltage* — Ex-proof-version **	U_n	V	220	24
			Further voltages available on request	
Initial power consumption — Standard version		VA (W)	8.5	2.5
Initial power consumption — Low watt. version		VA (W)	6.6	2.1
Initial power consumption — Ex-proof-version **		VA (W)	5.0	5.1
Continuous consumption — Standard version		VA (W)	6.0	2.5
Continuous consumption — Low watt. version		VA (W)	3.9	2.1
Continuous consumption — Ex-proof-version **		VA (W)	5.0	5.1
Duty cycle	ED	%	100	100
Electrical protection			IP65 to DIN 40050 (with plug)	
Insulating material			F (Ex-vers. E) to VDE 0580	
Connection			Plug to DIN 43650 form B[2)] Ex-version: Cable 1200 mm long	

* See Order Instructions for details
** For explosion-proof versions different technical requirements apply, according to Declaration of Conformity
1) We recommend the use of mineral oil type VG32 to ISO 3448
2) Plug for low wattage version available in DIN 43650 form A.

For product group list see 3.52.001E

Data Sheet No. 3.52.006E-1

A1P385E00JAA40X

The right to introduce technical modifications is reserved

HOERBIGER ORIGA

Dimensions (mm)

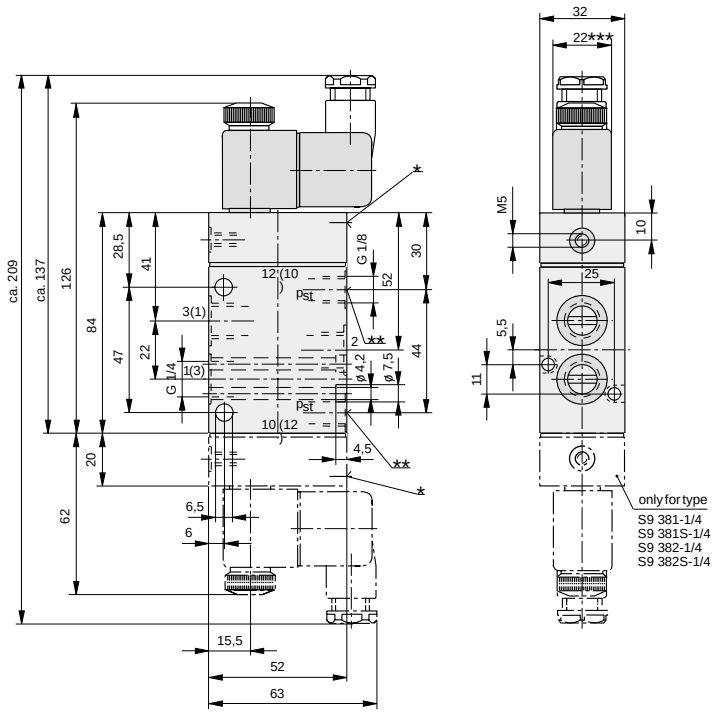

* Manual override
** Pilot connection p_{st} only required for Types S9 381S and S9 382S
*** Solenoid width is 30 mm on ex-proof version and low wattage coil version.

Order Instructions

Actuation	Return	Symbol	Order Instructions Type	Order No.
Electrical by permanent signal	Spring return	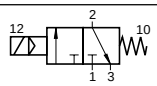	**S9 381RF-1/4-NG-..**	**PA 12716-..33**
		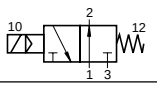	**S9 381RF-1/4-NO-..**	**PA 12717-..33**
with external pilot air	Spring return	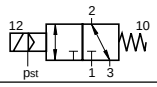	**S9 381S-RF-1/4-..**	**PA 12719-..33**
Electrical by impulse	Electrical by impulse	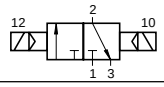	**S9 381-1/4-..**	**PA 12718-..33**
with external pilot air	with external pilot air	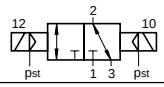	**S9 381S-1/4-..**	**PA 12720-..33**
Electrical by impulse differential piston	Electrical by impulse	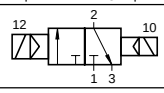	**S9 382-1/4-..**	**PA 12721-..33**
with external pilot air differential piston	Electrical by impulse	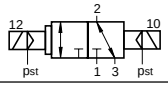	**S9 382S-1/4-..**	**PA 12722-..33**

Solenoid version	Nominal voltage	Applicable for	Key code
Standard version	220 V/50 (60) Hz	110 V=	61
	24 V=	48 V/50 (60) Hz	02
Low wattage version	24 V=		13
	220 V/50 (60) Hz		69
Ex-proof version *	24 V=		48
	220 V/50 (60) Hz		98

* For explosion-proof versions different technical requirements apply, according to Declaration of Conformity

Further voltages available on request.

5/2 Way Valve

G1/4

Actuation: Hand lever

Series S9

S9 511-1/4

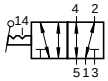

S9 511RF-1/4

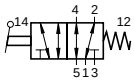

Characteristics to VDI 3290			Pressures quoted as gauge pressure
Characteristics	Symbol	Unit	Description
General Features			
Type			Spool valve
Mounting			2 screws M6
Tube connection			Thread
Port size			G1/4; 11 deep
Weight (mass)		kg	0.52
Installation			In any position
Ambient temperature range	ϑ_{min} ϑ_{max}	°C °C	-10 +60
Medium temperature range	ϑ_{min} ϑ_{max}	°C °C	-10 +70
Medium			Filtered compressed air
Lubrication			With or without oil mist lubrication [1]
Pneumatic Characteristics			
Nominal pressure	p_n	bar	6
Operating pressure range	p_{min} p_{max}	bar bar	0 10
Nominal flow	Q_N	l/min	1300
Actuation			
Manual control			Direct
Stroke		mm	6.5
Actuation force	F_b	N	Type S9 511-1/4: 10 Type S9 511RF-1/4: 15

Note: When using below freezing point (°C) it is necessary to consult us.

[1] We recommend the use of mineral oil type VG32 to ISO 3448

Dimensions (mm)

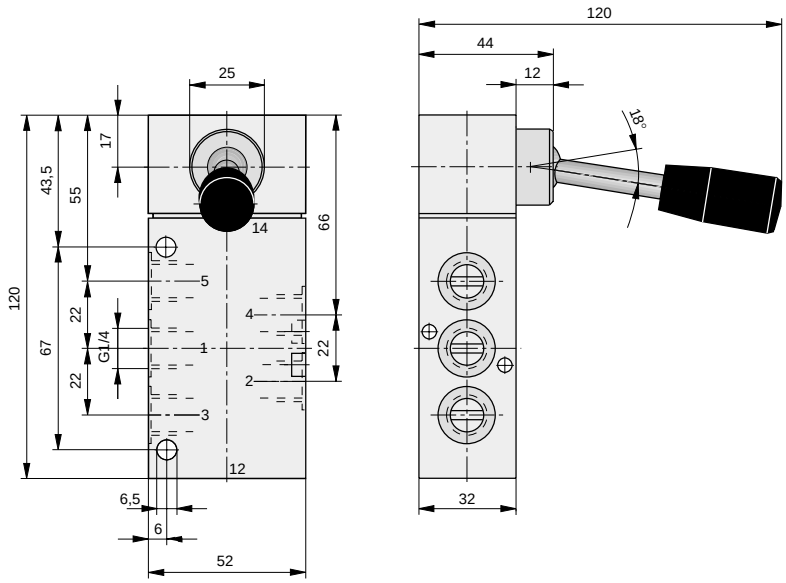

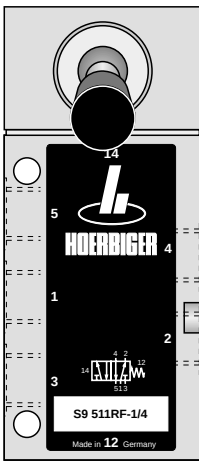

For product group list see 3.52.001E

Order Instructions:
S9 511-1/4 **PA 12671** (both lever positions indexed)
S9 511RF-1/4 **PA 12672** (with spring return)

Data Sheet No. 3.52.050E

A1P387E00FX40X

The right to introduce technical modifications is reserved

HOERBIGER ORIGA

5/2 Way Valve

G1/4

Actuation:
Safety hand lever

Series S9

S9 511S-1/4

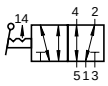

Characteristics to VDI 3290			Pressures quoted as gauge pressure	
Characteristics	Symbol	Unit	Description	
General Features				
Type			Spool valve	
Mounting			2 screws M6	
Tube connection			Thread	
Port size			G1/4; 11 deep	
Weight (mass)		kg	0.52	
Installation			In any position	
Ambient temperature range	ϑ_{min} ϑ_{max}	°C °C	-10 +60	Note: When using below freezing
Medium temperature range	ϑ_{min} ϑ_{max}	°C °C	-10 +70	point (°C) it is necessary to consult us.
Medium			Filtered compressed air	
Lubrication			With or without oil mist lubrication [1)]	
Pneumatic Characteristics				
Nominal pressure	p_n	bar	6	
Operating pressure range	p_{min} p_{max}	bar bar	0 10	
Nominal flow	Q_N	l/min	1300	
Actuation				
Manual control			Direct	
Stroke		mm	6.5	
Actuation force	F_b	N	10	

[1)] We recommend the use of mineral oil type VG32 to ISO 3448

Dimensions (mm)

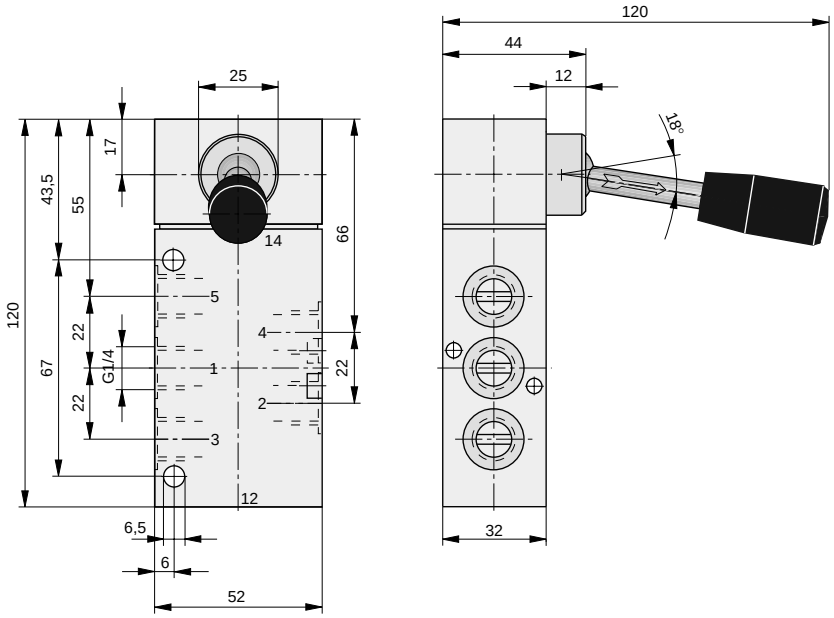

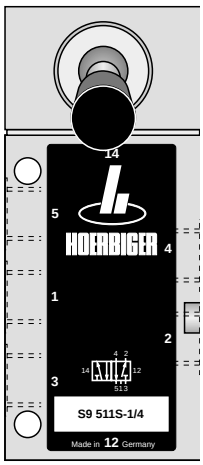

For product group list see 3.52.001E

Order Instruction:
S9 511S-1/4 **PA 12673** (both lever positions secured)

Data Sheet No. 3.52.051E

A1P388E00FX40X

The right to introduce technical modifications is reserved

5/2 Way Valve

G1/4

Actuation: Rotary lever

Series S9

S9 512-1/4

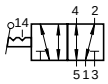

S9 512RF-1/4

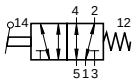

Characteristics to VDI 3290			Pressures quoted as gauge pressure	
Characteristics	Symbol	Unit	Description	
General Features				
Type			Spool valve	
Mounting			2 screws M6	
Tube connection			Thread	
Port size			G1/4; 11 deep	
Weight (mass)		kg	0.52	
Installation			In any position	
Ambient temperature range	ϑ_{min} ϑ_{max}	°C °C	-10 +60	Note: When using below freezing
Medium temperature range	ϑ_{min} ϑ_{max}	°C °C	-10 +70	point (°C) it is necessary to consult us.
Medium			Filtered compressed air	
Lubrication			With or without oil mist lubrication[1)]	
Pneumatic Characteristics				
Nominal pressure	p_n	bar	6	
Operating pressure range	p_{min} p_{max}	bar bar	0 10	
Nominal flow	Q_N	l/min	1300	
Actuation				
Manual control			Direct	
Stroke		mm	6.5	
Actuation force	F_b	N	Type S9 512-1/4: 10 Type S9 512RF-1/4: 15	

[1)] We recommend the use of mineral oil type VG32 to ISO 3448

Dimensions (mm)

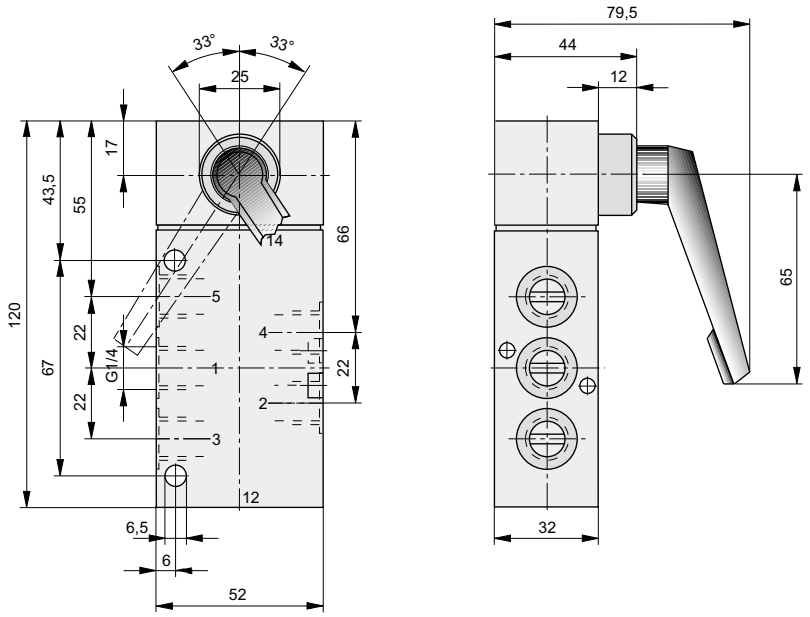

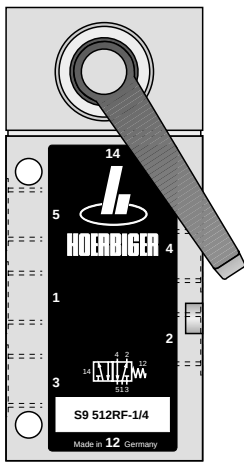

For product group list see 3.52.001E

Order Instructions:
S9 512-1/4 **PA 12674** (both lever positions indexed)
S9 512RF-1/4 **PA 12675** (with spring return)

Data Sheet No. 3.52.052E

A1P389E00FX40X

The right to introduce technical modifications is reserved

HOERBIGER ORIGA

5/2 Way Valve

G1/4

Actuation:
Pneumatic
- by permanent signal
- by impulse

Series S9 56.

S9 56.

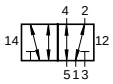

Characteristics to VDI 3290			Pressures quoted as gauge pressure	
Characteristics	Symbol	Unit	Description	
General Features				
Type			Spool valve	
Mounting			2 screws M6 (M4)	
Tube connection			Thread	
Port Size			G1/4; 11 deep	
Weight (mass)		kg	0.49 - permanent signal version 0.51 - impulse version	
Installation			In any position	
Ambient temperature range	ϑ_{min} ϑ_{max}	°C °C	-10 +60	Note: When using below freezing
Medium temperature range	ϑ_{min} ϑ_{max}	°C °C	-10 +70	point (°C) it is necessary to consult us.
Medium			Filtered compressed air	
Lubrication			With or without oil mist lubrication[1)]	
Pneumatic Characteristics				
Nominal pressure	p_n	bar	6	
Operating pressure range	p_{min} p_{max}	bar bar	0 10	
Nominal flow	Q_N	l/min	1300	
Actuation				
Pneumatic			Direct	
Actuation pressure range	$p_{st\,min}$ $p_{st\,max}$	bar bar	Permanent signal version 2 10	
	$p_{st\,min}$ $p_{st\,max}$	bar bar	Impulse version 1.5 (561) 10	2 (562)

[1)] We recommend the use of mineral oil type VG 32 to ISO 3448

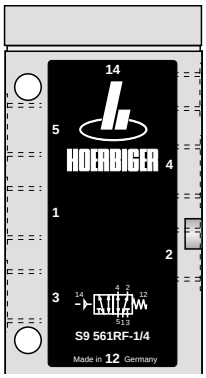

For product group list see 3.52.001E

Data Sheet No. 3.52.053E-1

A1P390E00FX40X

The right to introduce technical modifications is reserved

HOERBIGER ORIGA

Dimensions (mm)

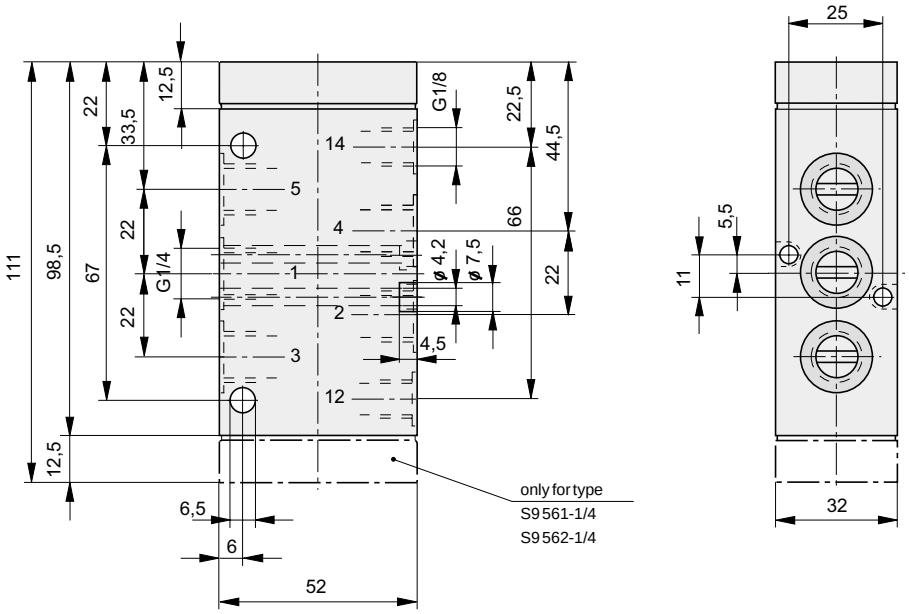

Order Instructions

Actuation	Return	Symbol	Order Instructions Type	Order No.
Pneumatic by permanent signal, spring return	Spring return	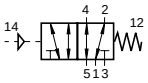	**S9 561RF-1/4**	**PA 12676**
Pneumatic by impulse	Pneumatic by impulse	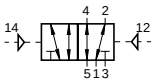	**S9 561-1/4**	**PA 12677**
Pneumatic by impulse, differential piston	Pneumatic by impulse	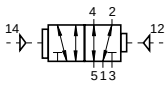	**S9 562-1/4**	**PA 12678**

5/2 Way Valve

G1/4

Characteristics to VDI 3290 Pressures quoted as gauge pressure

Characteristics	Symbol	Unit	Description	
General Features				
Type			Spool valve	
Mounting			2 screws M6 (M4)	
Tube connection			Thread	
Port size			G 1/4; 11 deep	
Weight (mass)		kg	0.6 - permanent signal version 0.7 - impulse version	
Installation			In any position	
Ambient temperature range	ϑ_{min} ϑ_{max}	°C °C	-10 +60	Note: When using below freezing
Medium temperature range	ϑ_{min} ϑ_{max}	°C °C	-10 +70	point (°C) it is necessary to consult us.
Medium			Filtered compressed air	
Lubrication			With or without oil mist lubrication[1)]	
Pneumatic Characteristics				
Nominal pressure	p_n	bar	6	
Operating pressure range	p_{min} p_{max}	bar bar	Permanent signal version 2 10	(0-10 Type S)
	p_{min} p_{max}	bar bar	Impulse version 1.5 (581) 10	2 (582)
Nominal flow	Q_N	l/min	1300	
Actuation				
Electrical			Pilot operated, Pilot operated with external pilot air	
Actuation pressure range (Type S)	$p_{st\ min}$ $p_{st\ max}$	bar bar	Permanent signal version 2 10	
	$p_{st\ min}$ $p_{st\ max}$	bar bar	Impulse version 1.5 (581) 10	2.5 (582)

Voltage				AC	DC
Nominal voltage*	Standard version	U_n	V	220	24
	Low watt. version	U_n	V	220	24
	Ex-proof-version **	U_n	V	220	24
				Further voltages available on request	
Initial power consumption	Standard version		VA (W)	8.5	2.5
	Low watt. version		VA (W)	6.6	2.1
	Ex-proof-version **		VA (W)	5.0	5.1
Continuous consumption	Standard version		VA (W)	6.0	2.5
	Low watt. version		VA (W)	3.9	2.1
	Ex-proof-version **		VA (W)	5.0	5.1
Duty cycle		ED	%	100	100
Electrical protection				IP65 to DIN 40050 (with plug)	
Insulating material				F (Ex-vers. E) to VDE 0580	
Connection				Plug to DIN 43650 form B [2)] Ex-version: Cable 1200 mm long	

* See Order Instructions for details
** For explosion-proof versions different technical requirements apply, according to Declaration of Conformity
[1)] We recommend the use of mineral oil type VG32 to ISO 3448
[2)] Plug for low wattage version available in DIN 43650 form A.

For product group list see 3.52.001E

Data Sheet No. 3.52.054E-1

Actuation:
Electrically pilot operated with standard solenoids
- by permanent signal
- by impulse

Series S9

S9 58.

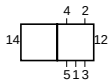

Variants:
S = with external pilot air

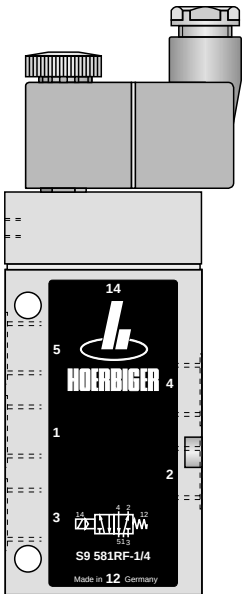

A1P391E00JAA40X

The right to introduce technical modifications is reserved

HOERBIGER ORIGA

Dimensions (mm)

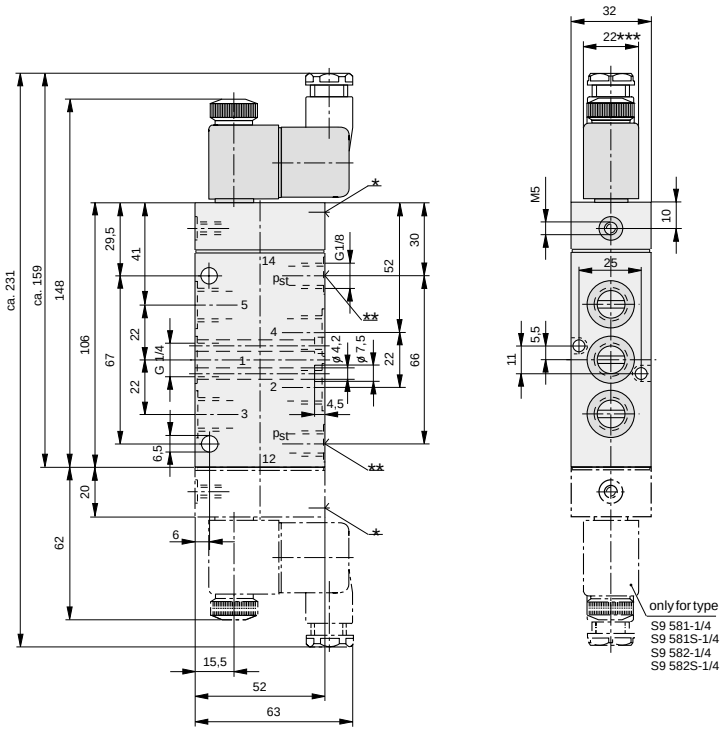

* Manual override
** Pilot connection p_{st} only required for types S9 581S and S9 582S
*** Solenoid width is 30 mm on ex-proof version and low wattage coil version.

Order Instructions

Actuation	Return	Symbol	Order Instructions Type	Order No.
Electrical by permanent signal	Spring return	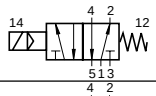	**S9 581RF-1/4-..**	**PA 12679-..33**
with external pilot air	Spring return	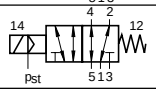	**S9 581S-RF-1/4-..**	**PA 12681-..33**
Electrical by impulse	Electrical by impulse	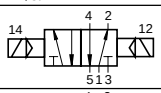	**S9 581-1/4-..**	**PA 12680-..33**
with external pilot air	with external pilot air	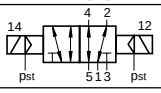	**S9 581S-1/4-..**	**PA 12682-..33**
Electrical by impulse differential piston	Electrical by impulse	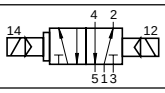	**S9 582-1/4-..**	**PA 12683-..33**
with external pilot air, differential piston	with external pilot air	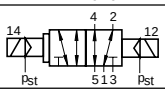	**S9 582S-1/4-..**	**PA 12684-..33**

Solenoid version	Nominal voltage	Applicable for	Key code
Standard version	220 V/50 (60) Hz	110 V=	61
	24 V=	48 V/50 (60) Hz	02
Low wattage version	24 V=		13
	220 V/50 (60) Hz		69
Ex-proof version *	24 V=		48
	220 V/50 (60) Hz		98

* For explosion-proof versions different technical requirements apply, according to Declaration of Conformity

Further voltages available on request.

5/3 Way Valve

G1/4

Actuation: Hand lever

Series S9

S9 511...-1/4

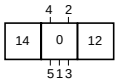

Characteristics to VDI 3290	Pressures quoted as gauge pressure			
Characteristics	Symbol	Unit	Description	
General Features				
Type			Spool valve	
Mounting			2 screws M6	
Tube connection			Thread	
Port size			G 1/4; 11 deep	
Weight (mass)		kg	0.52 0.53 - RF-Type	
Installation			In any position	
Ambient temperature range	ϑ_{min} ϑ_{max}	°C °C	-10 +60	Note: When using below freezing
Medium temperature range	ϑ_{min} ϑ_{max}	°C °C	-10 +70	point (°C) it is necessary to consult us.
Medium			Filtered compressed air	
Lubrication			With or without oil mist lubrication[1)]	
Pneumatic Characteristics				
Nominal pressure	p_n	bar	6	
Operating pressure range	p_{min} p_{max}	bar bar	0 10	
Nominal flow	Q_N	l/min	1300 - Type G, RFG, B, RFB 1000 - Type E, RFE	
Actuation				
Manual control			Direct	
Stroke		mm	6.5	

Actuation Force

Type	Actuation force (N)	Type	Actuation force (N)
S9 511G-1/4	10	S9 511RFG-1/4	15
S9 511E-1/4		S9 511RFE-1/4	
S9 511B-1/4		S9 511RFB-1/4	

[1)] We recommend the use of mineral oil type VG32 to ISO 3448

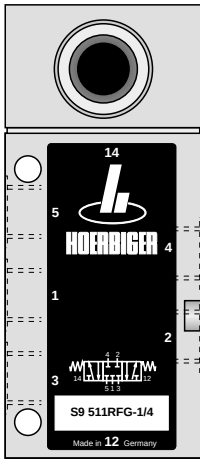

For product group list see 3.52.001E

Data Sheet No. 3.52.100E-1

A1P393E00FX40X

The right to introduce technical modifications is reserved

HOERBIGER ORIGA

Dimensions (mm)

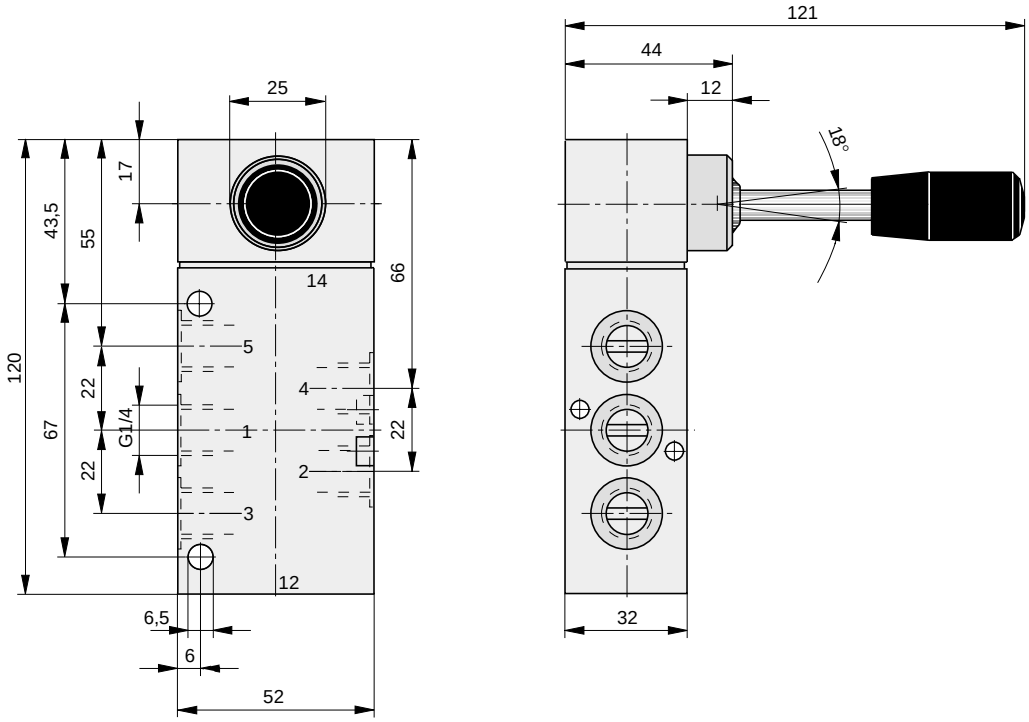

Order Instructions

Actuation	Middle position function	Symbol	Order Instructions Type	Order No.
Hand lever indexed in 3 operating positions	Middle position closed	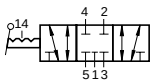	**S9 511G-1/4**	**PA 12687**
	Middle position exhausted	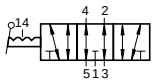	**S9 511E-1/4**	**PA 12688**
	Middle position pressurized	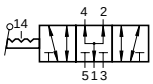	**S9 511B-1/4**	**PA 12689**
Hand lever with spring return to middle position	Middle position closed	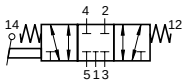	**S9 511RFG-1/4**	**PA 12690**
	Middle position exhausted	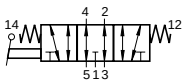	**S9 511RFE-1/4**	**PA 12691**
	Middle position pressurized	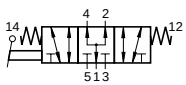	**S9 511RFB-174**	**PA 12692**

5/3 Way Valve

G1/4

Actuation:
Safety hand lever

Series S9

S9 511S.-1/4

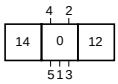

Characteristics to VDI 3290			Pressures quoted as gauge pressure
Characteristics	Symbol	Unit	Description
General Features			
Type			Spool valve
Mounting			2 screws M6
Tube connection			Thread
Port size			G1/4; 11 deep
Weight (mass)		kg	0.52
Installation			In any position
Ambient temperature range	ϑ_{min} ϑ_{max}	°C °C	-10 +60
Medium temperature range	ϑ_{min} ϑ_{max}	°C °C	-10 +70
Medium			Filtered compressed air
Lubrication			With or without oil mist lubrication[1)]
Pneumatic Characteristics			
Nominal pressure	p_n	bar	6
Operating pressure range	p_{min} p_{max}	bar bar	0 10
Nominal flow	Q_N	l/min	1300 - Type SG, SB 1000 - Type SE
Actuation			
Manual control			Direct
Stroke			6.5
Actuation force	F_b	N	10

Note: When using below freezing point (°C) it is necessary to consult us.

[1)] We recommend the use of mineral oil type VG32 to ISO 3448

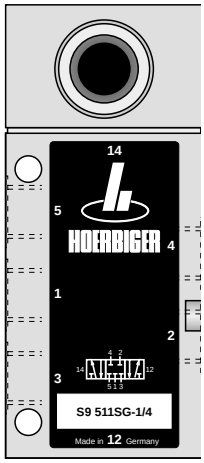

For product group list see 3.52.001E

Data Sheet No. 3.52.101E-1

A1P394E00FX40X

The right to introduce technical modifications is reserved

HOERBIGER ORIGA

Dimensions (mm)

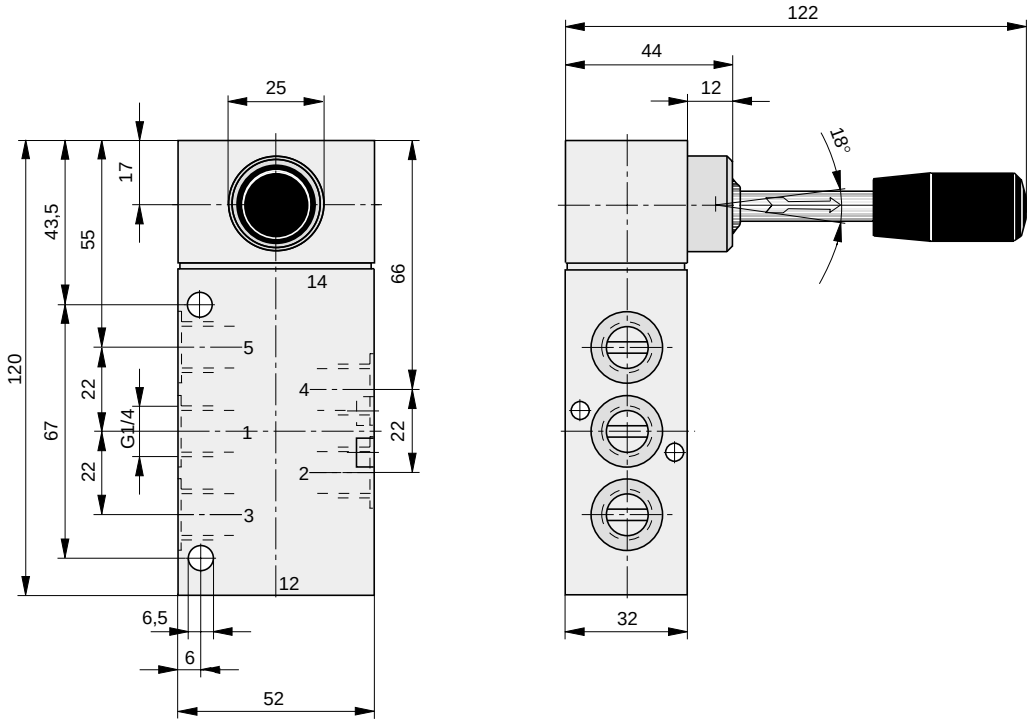

Order Instructions

Actuation	Middle position function	Symbol	Order Instructions Type	Order No.
Hand lever secured in 3 operating positions	Middle position closed	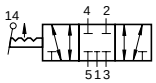	**S9 511SG-1/4**	**PA 12693**
	Middle position exhausted	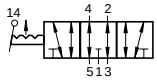	**S9 511SE-1/4**	**PA 12694**
	Middle position pressurized	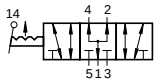	**S9 511SB-1/4**	**PA 12695**

5/3 Way Valve

G1/4

Actuation: Rotary lever

Series S9

S9 512...-1/4

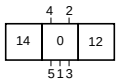

Characteristics to VDI 3290	Pressures quoted as gauge pressure			
Characteristics	Symbol	Unit	Description	
General Features				
Type			Spool valve	
Mounting			2 screws M6	
Tube connection			Thread	
Port size			G 1/4; 11 deep	
Weight (mass)		kg	0.52 0.53 - RF-Type	
Installation			In any position	
Ambient temperature range	ϑ_{min} ϑ_{max}	°C °C	-10 +60	Note: When using below freezing
Medium temperature range	ϑ_{min} ϑ_{max}	°C °C	-10 +70	point (°C) it is necessary to consult us.
Medium			Filtered compressed air	
Lubrication			With or without oil mist lubrication [1]	
Pneumatic Characteristics				
Nominal pressure	p_n	bar	6	
Operating pressure range	p_{min} p_{max}	bar bar	0 10	
Nominal flow	Q_N	l/min	1300 - Type G, RFG, B, RFB 1000 - Type E, RFE	
Actuation				
Manual control			Direct	
Stroke		mm	6.5	

Actuation Force			
Type	Actuation force (N)	Type	Actuation force (N)
S9 512G-1/4	10	S9 512RFG-1/4	15
S9 512E-1/4		S9 512RFE-1/4	
S9 512B-1/4		S9 512RFB-1/4	

[1] We recommend the use of mineral oil type VG32 to ISO 3448

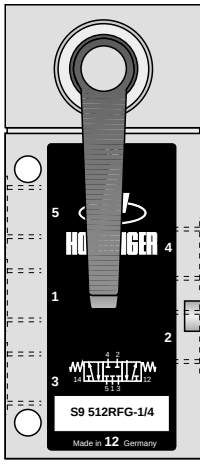

A1P395E00FX40X

The right to introduce technical modifications is reserved

For product group list see 3.52.001E

Data Sheet No. 3.52.102E-1

HOERBIGER ORIGA

Dimensions (mm)

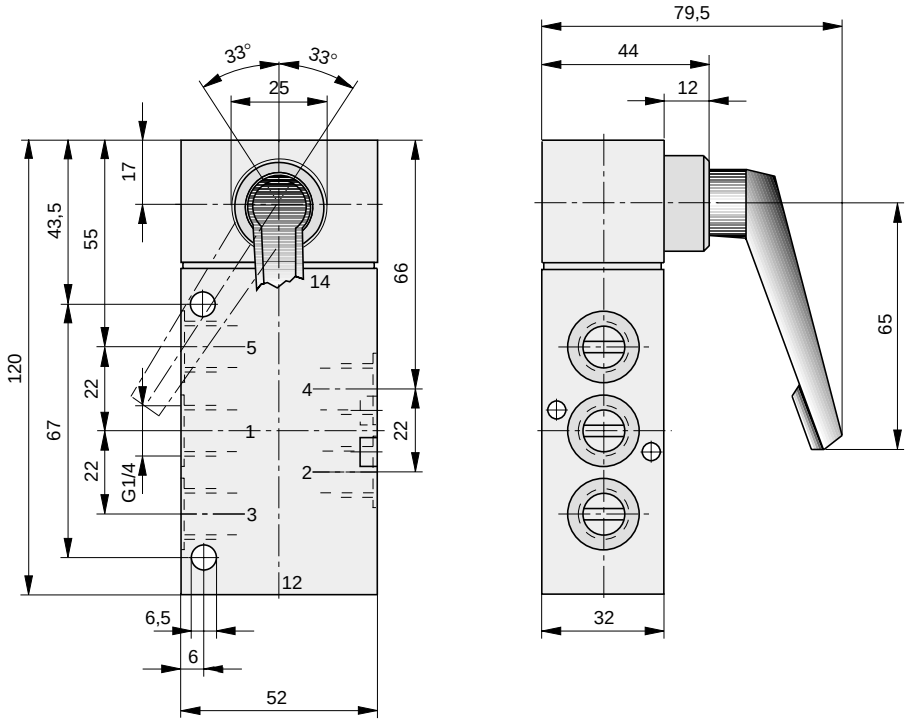

Order Instructions

Actuation	Middle position function	Symbol	Order Instructions Type	Order No.
Rotary lever indexed in 3 operating positions	Middle position closed	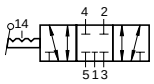	**S9 512G-1/4**	**PA 12696**
	Middle position exhausted	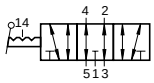	**S9 512E-1/4**	**PA 12697**
	Middle position pressurized	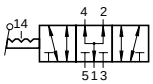	**S9 512B-1/4**	**PA 12698**
Rotary lever with spring return to middle position	Middle position closed	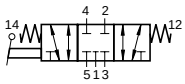	**S9 512RFG-1/4**	**PA 12699**
	Middle position exhausted	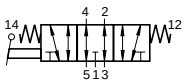	**S9 512RFE-1/4**	**PA 12700**
	Middle position pressurized	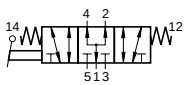	**S9 512RFB-1/4**	**PA 12701**

5/3 Way Valve

G1/4

Actuation:
Pneumatic by permanent signal

Series S9

S9 561RF.-1/4

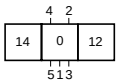

Characteristics to VDI 3290			Pressures quoted as gauge pressure
Characteristics	Symbol	Unit	Description
General Features			
Type			Spool valve
Mounting			2 screws M6 (M4)
Tube connection			Thread
Port size			G1/4; 11 deep
Weight (mass)		kg	0.53
Installation			In any position
Ambient temperature range	ϑ_{min} ϑ_{max}	°C °C	-10 +60
Medium temperature range	ϑ_{min} ϑ_{max}	°C °C	-10 +70
Medium			Filtered compressed air
Lubrication			With or without oil mist lubrication[1)]
Pneumatic Characteristics			
Nominal pressure	p_n	bar	6
Operating pressure range	p_{min} p_{max}	bar bar	0 10
Nominal flow	Q_N	l/min	1300 - Type RFG, RFB 1000 - Type RFE
Actuation			
Pneumatic			Direct
Actuation pressure range	$p_{st\,min}$ $p_{st\,max}$	bar bar	2 10

Note: When using below freezing point (°C) it is necessary to consult us.

[1)] We recommend the use of mineral oil type VG32 to ISO 3448

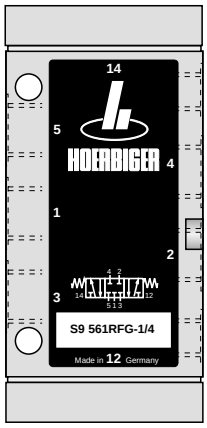

For product group list see 3.52.001E

Data Sheet No. 3.52.103E-1

A1P396E00FX40X

The right to introduce technical modifications is reserved

HOERBIGER ORIGA

Dimensions (mm)

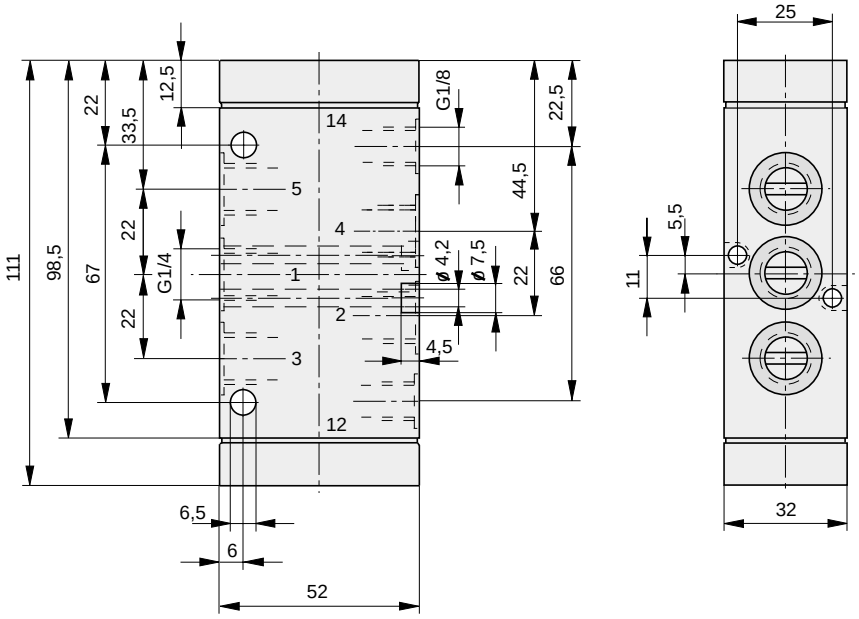

Order Instructions

Actuation	Middle position function	Symbol	Order Instructions Type	Order No.
Pneumatic, by permanent signal, with spring return to middle position	Middle position closed	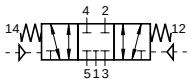	**S9 561RFG-1/4**	**PA 12702**
	Middle position during ventilization	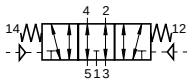	**S9 561RFE-1/4**	**PA 12703**
	Middle position during pressurization	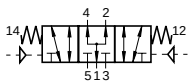	**S9 561RFB-1/4**	**PA 12704**

5/3 Way Valve

G1/4

Actuation:
Electrical pilot operation with standard solenoids - by permanent signal

Series S9

S9 581RF.-1/4

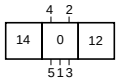

Characteristics to VDI 3290			Pressures quoted as gauge pressure	
Characteristics	Symbol	Unit	Description	
General Features				
Type			Spool valve	
Mounting			2 screws M6 (M4)	
Tube connection			Thread	
Port size			G 1/4; 11 deep	
Weight (mass)		kg	0.70	
Installation			In any position	
Ambient temperature range	ϑ_{min} ϑ_{max}	°C °C	-10 +60	Note: When using below freezing
Medium temperature range	ϑ_{min} ϑ_{max}	°C °C	-10 +70	point (°C) it is necessary to consult us.
Medium			Filtered compressed air	
Lubrication			With or without oil mist lubrication[1)]	
Pneumatic Characteristics				
Nominal flow	p_n	bar	6	
Operating pressure range	p_{min} p_{max}	bar bar	2 10	
Nominal flow	Q_N	l/min	1300 - Type RFG, RFB 1000 - Type RFE	
Actuation				
Electrical			Pilot operated	
Voltage			AC	DC
Nominal voltage* — Standard version	U_n	V	220	24
Nominal voltage* — Low watt. version	U_n	V	220	24
Nominal voltage* — Ex-proof-version **	U_n	V	220	24
			Further voltages available on request	
Initial power consumption — Standard version		VA (W)	8.5	2.5
Initial power consumption — Low watt. version		VA (W)	6.6	2.1
Initial power consumption — Ex-proof-version **		VA (W)	5.0	5.1
Continuous consumption — Standard version		VA (W)	6.0	2.5
Continuous consumption — Low watt. version		VA (W)	3.9	2.1
Continuous consumption — Ex-proof-version **		VA (W)	5.0	5.1
Duty cycle	ED	%	100	100
Electrical protection			IP65 to DIN 40050 (with plug)	
Insulating material			F (Ex-version E) to VDE 0580	
Connection			Plug to DIN 43650 form B[2)] Ex-version: Cable 1200 mm long	

* See Order Instructions for details
** For explosion-proof versions different technical requirements apply, according to Declaration of Conformity
[1)] We recommend the use of mineral oil type VG32 to ISO 3448
[2)] Plug for low wattage version available in DIN 43650 form A.

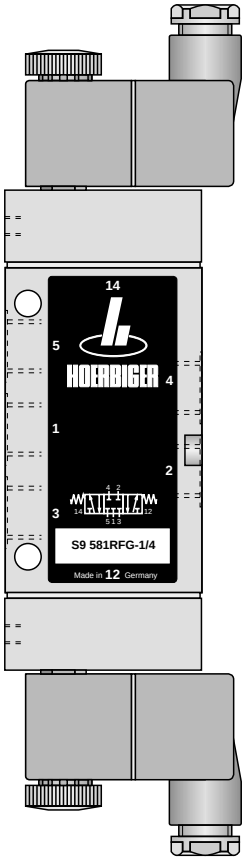

A1P397E00JAA40X

The right to introduce technical modifications is reserved

For product group list see 3.52.001E

HOERBIGER ORIGA

Dimensions (mm)

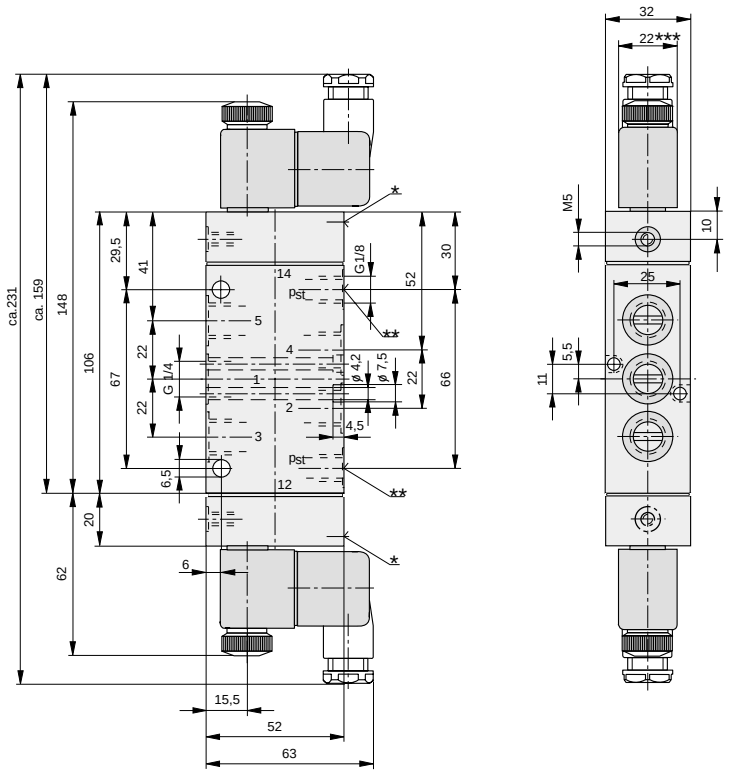

* Manual override
** Pilot connection p_{st} required only for servo-type - available on request
*** Solenoid width is 30 mm for ex-proof version and low wattage coil version

Order Instructions

Actuation	Middle position function	Symbol	Order Instructions Type	Order No.
Electrical, by permanent signal, with spring return to middle position	Middle position closed	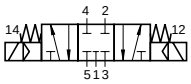	**S9 581RFG-1/4-..**	**PA 12705-..33**
	Middle position exhausted	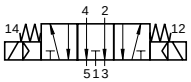	**S9 581RFE-1/4-..**	**PA 12706-..33**
	Middle position pressurized	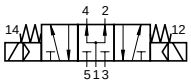	**S9 581RFB-1/4-..**	**PA 12707-..33**

Solenoid version	Nominal voltage	Applicable for	Key code
Standard version	220 V/50 (60) Hz	110 V=	61
	24 V=	48 V/50 (60) Hz	02
Low wattage version	24 V=		13
	220 V/50 (60) Hz		69
Ex-proof version *	24 V=		48
	220 V/50 (60) Hz		98

* For explosion-proof versions different technical requirements apply, according to Declaration of Conformity

Further voltages available on request.

3/2, 5/2 and 5/3 Way Valves

G1/4

with Logic Elements

Actuation:
AND
OR
TIMER

Series S9 ... .../..-1/4

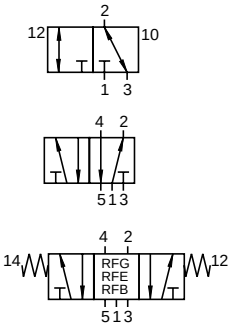

Characteristics according to VDI 3290			Pressures quoted as gauge pressure	
Characteristics	Symbol	Unit	Description	
General Features				
Type			Spool valve	
Mounting			2 screws M6 (M4)	
Tube connection			Thread	
Port size			G1/4; 11 deep	
Weight (mass)		kg	See table	
Installation			In any position	
Ambient temperature range	ϑ_{min} ϑ_{max}	°C °C	-10 +60	Note: When using below freezing point (°C) it is necessary to consult us.
Medium temperature range	ϑ_{min} ϑ_{max}	°C °C	-10 +70	
Medium			Filtered compressed air	
Lubrication			With or without oil mist lubrication [1)]	
Pneumatic Characteristics				
Nominal pressure	p_n	bar	6	
Operating pressure range	p_{min} p_{max}	bar bar	0 10	
Nominal flow	Q_N	l/min	See table	
Actuation				
Pneumatically			Direct, indirect	
Control pressure range	$p_{st\,min}$ $p_{st\,max}$	bar bar	2 10	With permanent signal
	$p_{st\,min}$ $p_{st\,max}$	bar bar	1,5 10	With impulse signal
Time delay	t	s	0-10	

[1)] We recommended the use of mineral oil type VG32 to ISO 3448

Weight (mass) kg		
Description	Weight (kg) Version: permanent signal with spring return	Version: with impulse actuation
3/2 way valve	0.37	0.43
5/2 way valve	0.49	0.51
5/3 way valve	0.53	–

Nominal Flow (l/min)	
Description	Q_N (l/min)
3/2 way valve	1300
5/2 way valve	1300
5/3 way valve	1300 - Version RFG 1300 - Version RFB 1000 - Version RFE

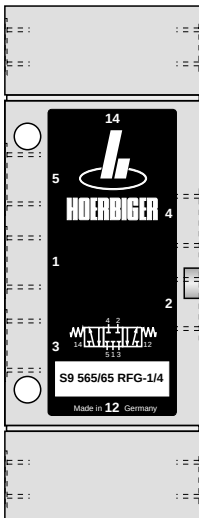

For product group list see 3.52.001E

Data Sheet No. 3.52.290E-1

A1P463E00FU40X

The right to introduce technical modifications is reserved

HOERBIGER ORIGA

Valve Combinations with Logic Elements - 3/2, 5/2 and 5/3 Way Valves

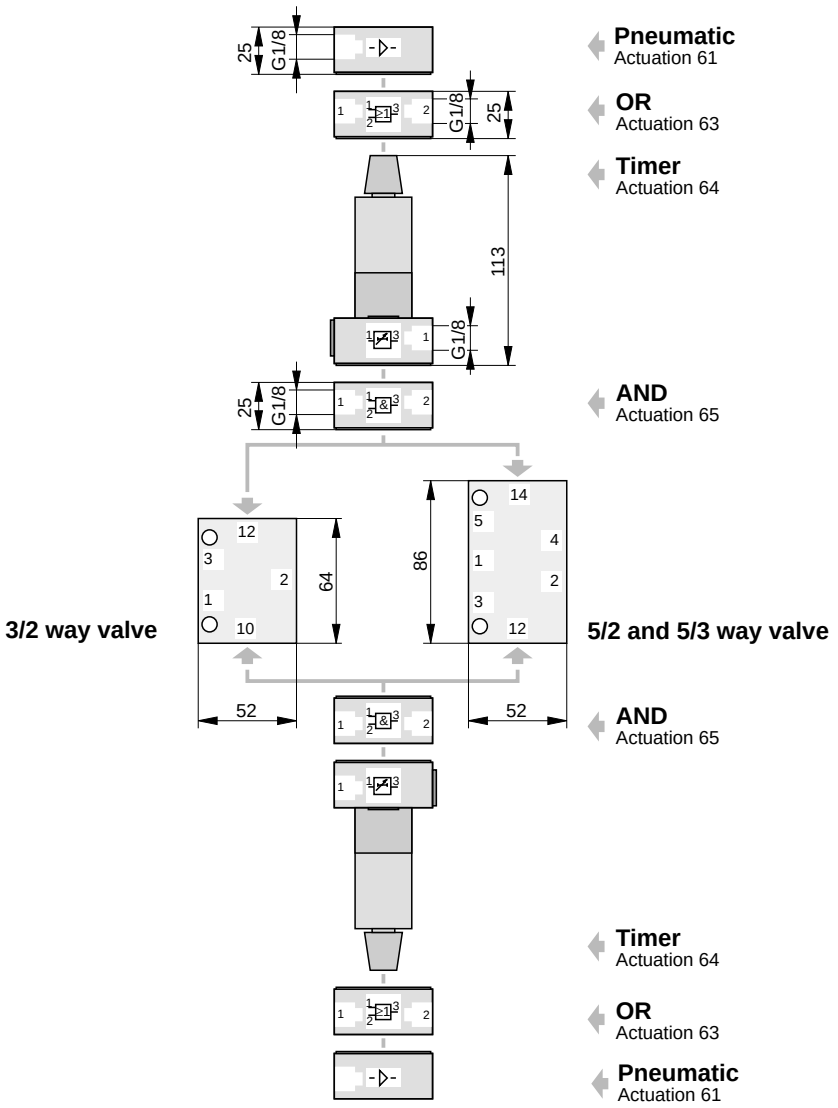

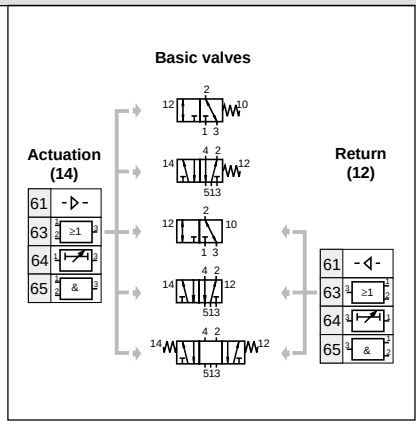

For further information, see 3.52.005E, 3.52.053E, 3.52.103E

Order Instructions	S9	5	63 / 65	RFG	1/4	Ordering Example

Version	
3	3 way valve
5	5 way valve

Middle position function (only with 5/3 way valve)	
RFG	closed
RFE	vented
RFB	pressurized

Actuation (14)	
61	pneumatic
63	OR
64	Timer
65	AND

Return (12)	
RF	spring return
61	pneumatic
63	OR
64	Timer
65	AND

Valve Island with Multipole Connection

Characteristics according to VDI 3290			Pressures quoted as gauge pressure
Characteristics	Symbol	Unit	Description
General Features			
Mounting			2 screws – see drawing
Type			IM20-1/4
Connection thread			
– air supply & exhaust			G3/8 both sides
– valve outlets			G1/4
Grid size for valve positions		mm	33
Installation			In any position
Ambient and medium temperature range	ϑ_{min} ϑ_{max}	°C °C	–25 For use below freezing point +70 (0 °C) please consult us
Medium			Filtered (5µm) compressed air or neutral gases, lub. or non-lub.
Materials			
Base plate			Aluminium
Valve housing			Aluminium
Seals			NBR
Valve service life			10 x 10^6 switching cycles
No. of valve positions			4 – 6 – 8 – 10 – 12 – 14 – 16*
No. of switching outputs			Max. 24
No. of sensor inputs			Max. 32
Pneumatic Characteristics			
Nominal pressure	p_n	bar	6
Operating pressure range	p_{min} p_{max}	bar bar	2.5 10
Nominal flow	Q_n	l/min	1300
Actuation			
Electrical			By control system
Voltage type			DC
Nominal voltage	U_n	V	24
Power consumption		W	2.5
Mass/ground			Minus pole
Electrical protection		IP	65
Electrical protection of input clamps		IP	20
Electrical protection of input connectors		IP	65
Connection Multipole connection			25-pin sub-D connector or 24-pin industrial connector
Sensor inputs			Ladder clamps or M8 x 1 4-pin connector
Switching indicator			LED
Protective circuit			Integrated

* other numbers of valves can be fitted via the use of blanking plates.

Versions:
- **Connection with sub-D connector**
- **Connection with heavy duty industrial connector**
- **With or without sensor inputs**
- **With multi-connection for sensor inputs (via 44-pin sub-D connector)**

Series

IM20-1/4

Multipole islands can be equipped with the following valves:
- 5/2 way valves with spring return
- 5/2 way impulse valves
- 5/3 way valves with spring return to middle position:
  - middle position closed
  - middle position vented
  - middle position pressurized

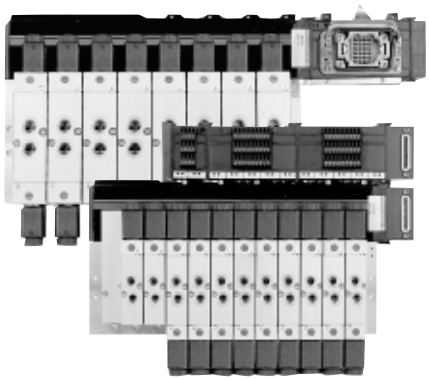

For **bus connection** see 3.52.333E, for **valve islands G1/8** see 3.42.332E, 333E, for **solenoid valves G1/4** see 3.52.054E, 3.52.104E

Data Sheet No. 3.52.332E-1

A1P676E00JAA00X

The right to introduce technical modifications is reserved

Valve Island with Bus Connection

Characteristics to VDI 3290			Pressures quoted as gauge pressure
Characteristics	Symbol	Unit	Description
General Features			
Mounting			2 screws – see drawing
Type			IM20-1/4
Connection thread			
– air supply & exhaust			G3/8 both sides
– valve outlets			G1/4
Grid dimension for valve positions		mm	33
Installation			In any position
Ambient and medium temperature range	ϑ_{min} ϑ_{max}	°C °C	–25 For use below freezing +70 point (0 °C) please consult us
Medium			Filtered (5µm) compressed air or neutral gases, lub. or non-lub.
Materials			
Base plate			Aluminium
Valve housing			Aluminium
Seals			NBR
Valve service life			10 x 10^6 switching cycles
No. of valve positions			4 – 6 – 8 – 10 – 12–14–16*
No. of switching outputs			Max. 24
No. of sensor inputs			Max. 32
Pneumatic Characteristics			
Nominal pressure	p_n	bar	6
Operating pressure range	p_{min} p_{max}	bar bar	2.5 10
Nominal flow	Q_n	l/min	1300
Actuation			
Electrical			Pilot operated
Voltage type			DC
Nominal voltage	U_n	V	24
Power consumption		W	2.5
Mass/ground			Minus pole
Electrical protection		IP	65
Electrical protection of input clamps		IP	20
Electrical protection of input connectors		IP	65
Connection Field bus connection			According to field bus accessories
Sensor inputs			Ladder clamps or M8 x 1 4-pin connectors
Switching indicator			LED
Protective circuit			Integrated

* other numbers of valves can be fitted via the use of blanking plates.

Versions:
- **Profibus DP**
- **Interbus S**
- **CAN Open**
- **Internal bus**
- **With or without sensor inputs**
- **With or without integrated modules for sensor inputs**

Series

IM20-1/4

Multipole islands can be equipped with the following valves:
- 5/2 way valves with spring return
- 5/2 way impulse valves
- 5/3 way valves with spring return to middle position
  - middle position closed
  - middle position vented
  - middle position pressurized

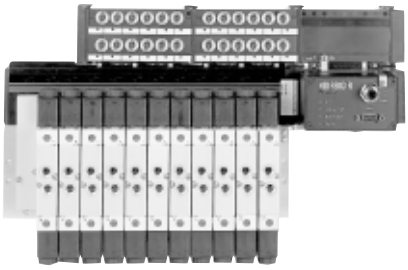

For **multipole connection** see 3.52.332E, for **valve islands G1/8** see 3.42.332E, 333E, for **solenoid valves G1/4** see 3.52.054E, 3.52.104E

A1P677E00JAA00X

The right to introduce technical modifications is reserved

Dimensions
– Field bus island with M8 4-pin feedback inputs

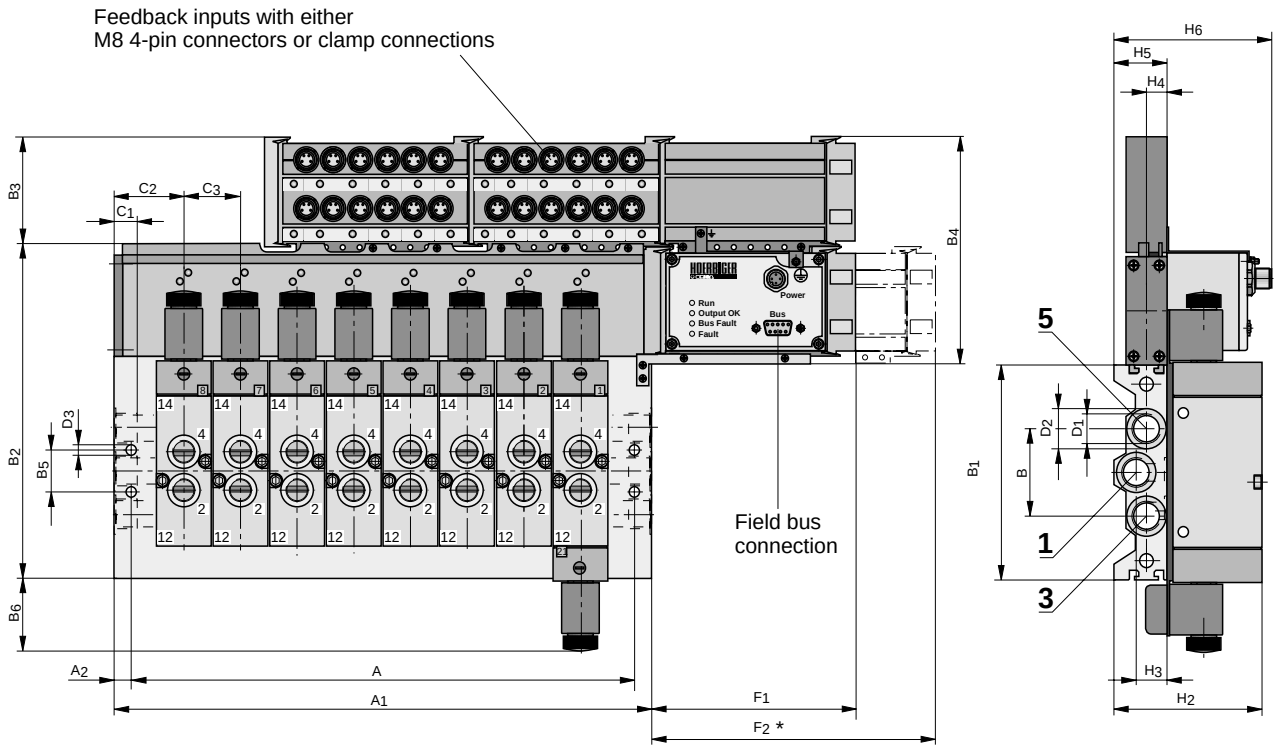

* with expansion module for internal bus

Dimension Table (mm)

Valve island	Dimension A	A_1	A_2	B	B_1	B_2	B_3	B_4	B_5	B_6	B_7	C_1
IM20-1/4	17+ x C_3	30+ x C_3	6	50	123	190	62.5	132	24	42.5	73.5	12

Valve island	Dimension C_2	C_3	D_1	øD_2	øD_3	F_1	F_2	H_2	H_3	H_4	H_5	H_6
IM20-1/4	31	33	G3/8	23x0.5	6.2	126	164	86	18.5	12	31	88.5

x C_3= dimension C_3 multiplied by number of valves

Ordering Example:
Valve island with fieldbus connection,
8 fold, equipped with:
1 bistable 5/2 valves S9 581-1/4
7 monostable 5/2 valves S9 581RF-1/4

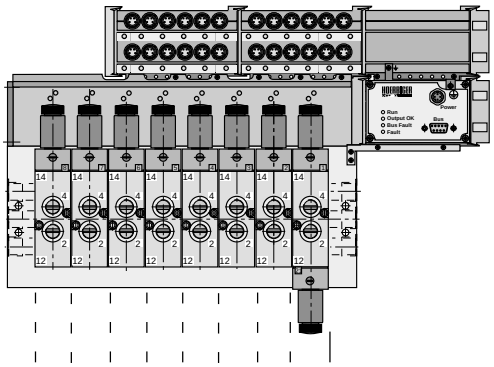

	Order No.							Electr. connection		Internal Bus-expansion	No. of Valves		Valve position												Input module	Number of inputs		Channel divider	Position of channel divider	
													1	2	3	4	5	6	7	8	9	10	11	12						
Ordering example	P	A	1	0	3	8	1	D	P		0	8	M	M	M	M	M	M	M	J										

4 6 8 10 12
even number of valve positions only

Important: Please specify the code for the desired valve types

Valve Island – Sizes	
PA12867	Type: IM20-1/4 Connections: G1/4 – valve ports G3/8 – base plates

Input Modules	
K	Pins IP20
S	M8 IP65 connector
04-08-12	Number of inputs
16-20-24	
28-32	

Electrical Connection	
Fieldbus Version	
DP	Profibus DP
IS	Interbus S
CO	CAN Open
IB	Internal Bus

Dual Pressure Operation	
J	with channel divider in port 1 (P)
01 – 11	Position of channel divider to valve position

Internal Bus Expansion	
J	RIO-IF Module

Valve Positions	
04	up to 4 valves
06	5 and 6 valves
08	7 and 8 valves
10	9 and 10 valves
12	11 and 12 valves
14	13 and 14 valves
16	15 and 16 valves

Ordering Code for Valves and Blanking Plates

Code	Symbol	Description	Data Sheet
A	–	Blanking plate on valve position	For further informations, please refer to the special Data Sheets 3.42.053E, 3.42.103E
M	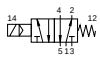	5/2 way solenoid valve, permanent signal with spring return Type: S9 581RF-..	
J	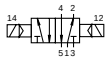	5/2 way solenoid valve, Impulse version Type: S9 581-..	
G	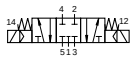	5/3 way solenoid valve, spring return to middle position, middle position closed Type: S9 581RFG-..	
B		5/3 way solenoid valve, spring return to middle position, middle position pressurised Type: S9 581RFB-..	
E	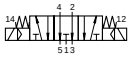	5/3 way solenoid valve, spring return to middle position, middle position vented Type: S9 581RFE-...	

Accessories – for valve islands with field bus connection

- Cable with connector
- Straight M8 4-pin connector
- Straight M12 4-pin connector
- Elbow M12 4-pin connector

Cable with M8 connector – for internal bus expansion

Picture	Cable length	Order Instructions Type	Order No.
	1.0 m	**K-M8-41**	**KL9008**
	2.0 m	**K-M8-42**	**KL9010**

Straight M12 connector (without cable)

Picture	Number of pins	Application	Order Instructions Type	Order No.
	4	For power supply of the bus system	**K-M12-4**	**KL9007**

Elbow M12 connector (without cable)

Picture	Number of pins	Application	Order Instructions Type	Order No.
	4	For power supply of the bus system	**K-M12W-4**	**KL9004**

Operation Manual (Disk 3.5”)

Included with each delivery (order no. PD44291)

Straight M8 Connector

Picture	Number of pins	Application	Order Instructions Type	Order No.
	4	For custom made cables	**K-M8-4**	**KL9011**

P-Supply Manifolds

for directional valves of the S9-1/4 Series

Series PL.-1/4-..

Dimensions (mm)

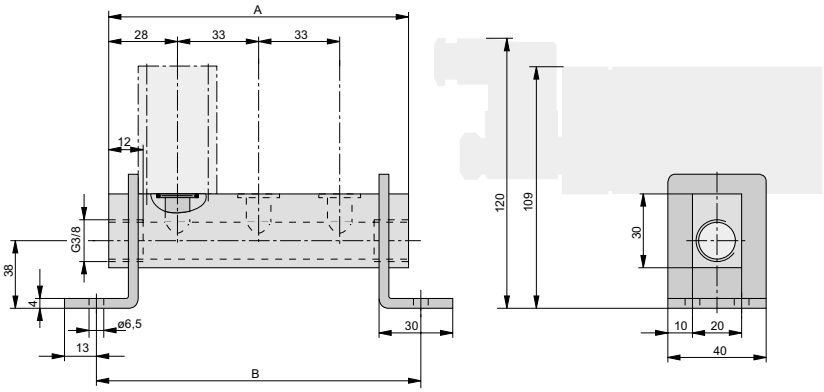

Drawing shows: PLK-1/4-3

Dimension Table (mm)

Type	No. of valves	A	B
PLK-1/4-2	2	89	99
PLK-1/4-3	3	122	132
PLK-1/4-4	4	155	165
PLK-1/4-5	5	188	198
PLK-1/4-6	6	221	231
PLK-1/4-7	7	254	264
PLK-1/4-8	8	287	297
PLK-1/4-9	9	320	330
PLK-1/4-10	10	353	363

Material

Description	Material
P-supply manifold	Al, anodized
Mounting bracket	Steel, passivated
Screws	Galvanized steel
O-ring	Oil-resist. rubber

Accessories

Description	**Order No.**
Complete cover plate	**PD 34695**
Flow divider	**PD 37156**

P-supply manifolds reduce and simplify tubing. They allow a space-saving and clear, compact design. 3/2, 5/2 and 5/3 directional valves with different types of actuation can be mounted in groups of 2-10 pieces.

The use of impulse solenoid valves is only possible with P-supply manifold type PL-..

The delivery includes:
P-supply manifold
Mounting bracket
Mounting screws
O-rings

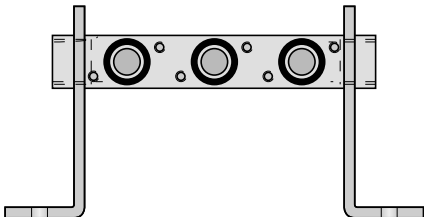

Order Instructions and Weight

Order Instructions Type	Order No.	consisting of Manifold	Bracket	Screw	O-ring	Weight (kg)
PLK-1/4-2	**PD 37175-0002**	1	2	4	2	0.31
PLK-1/4-3	**PD 37175-0003**	1	2	6	3	0.35
PLK-1/4-4	**PD 37175-0004**	1	2	8	4	0.39
PLK-1/4-5	**PD 37175-0005**	1	2	10	5	0.43
PLK-1/4-6	**PD 37175-0006**	1	2	12	6	0.47
PLK-1/4-7	**PD 37175-0007**	1	2	14	7	0.51
PLK-1/4-8	**PD 37175-0008**	1	2	16	8	0.55
PLK-1/4-9	**PD 37175-0009**	1	2	18	9	0.59
PLK-1/4-10	**PD 37175-0010**	1	2	20	10	0.63

For product group list of directional valves see 3.52.001E

A1P145E00FX40X

The right to introduce technical modifications is reserved

HOERBIGER ORIGA

Dimensions (mm)

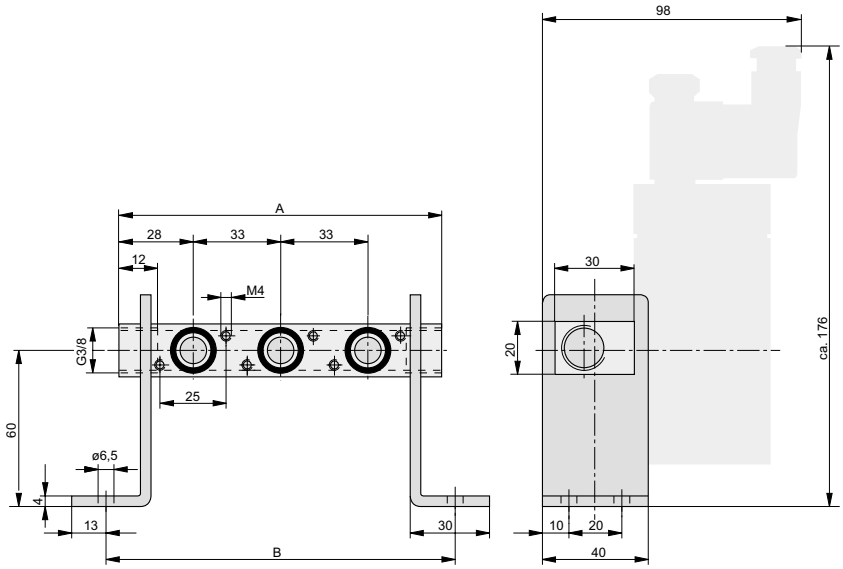

Drawing shows: PL-1/4-3

Dimension Table (mm)

Type	No. of valves	A	B
PL-1/4-2	2	89	99
PL-1/4-3	3	122	132
PL-1/4-4	4	155	165
PL-1/4-5	5	188	198
PL-1/4-6	6	221	231
PL-1/4-7	7	254	264
PL-1/4-8	8	287	297
PL-1/4-9	9	320	330
PL-1/4-10	10	353	363

Material

Description	Material
P-supply manifold	Al, anodized
Mounting bracket	Steel, passivated
Screws	Galvanized steel
O-ring	Oil-resist. rubber

Accessories

Description	**Order No.**
Complete cover plate	**PD 34695**
Flow divider	**PD 37156**

Order Instructions and Weight

Order Instructions		consisting of				Weight
Type	**Order No.**	Manifold	Bracket	Screw	O-ring	(kg)
PL-1/4-2	**PD 32765-0002**	1	2	4	2	0.31
PL-1/4-3	**PD 32765-0003**	1	2	6	3	0.35
PL-1/4-4	**PD 32765-0004**	1	2	8	4	0.39
PL-1/4-5	**PD 32765-0005**	1	2	10	5	0.43
PL-1/4-6	**PD 32765-0006**	1	2	12	6	0.47
PL-1/4-7	**PD 32765-0007**	1	2	14	7	0.51
PL-1/4-8	**PD 32765-0008**	1	2	16	8	0.55
PL-1/4-9	**PD 32765-0009**	1	2	18	9	0.59
PL-1/4-10	**PD 32765-0010**	1	2	20	10	0.63

For product group list see 3.52.001E

RPS-Supply Manifolds

for directional valves of the S9-1/4 series

Series RPSL-S9-1/4-..

Dimensions (mm)

For dimensions A and B see table

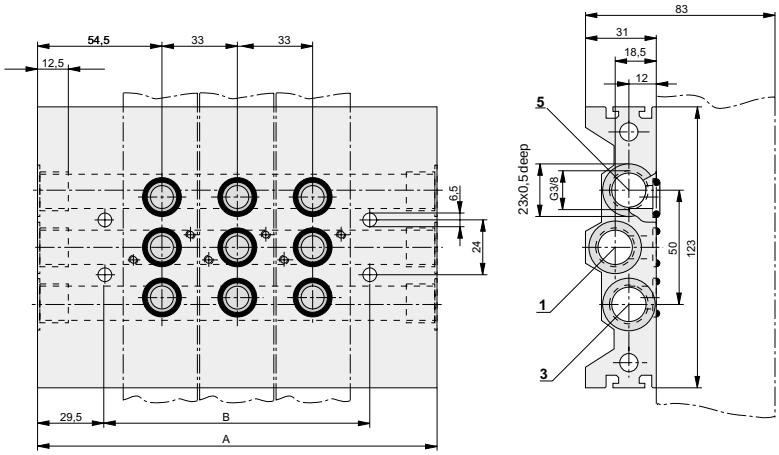

Drawing shows: RPS-S9-1/4-3

Dimension Table (mm)

Type	No. of valves	A	B
RPSL-S9-1/4-2	2	142	83
RPSL-S9-1/4-3	3	175	116
RPSL-S9-1/4-4	4	208	149
RPSL-S9-1/4-5	5	241	182
RPSL-S9-1/4-6	6	274	215
RPSL-S9-1/4-7	7	307	248
RPSL-S9-1/4-8	8	340	281
RPSL-S9-1/4-9	9	373	314
RPSL-S9-1/4-10	10	406	347

Material

Description	Material
RPS-supply mani.	Anodized alum.
Screws	Galvanized steel
O-ring	Oil-resist. rubber

Accessories

Description	**Order No.**
Cover strip kit	**PD 32957**
Flow divider	**PD 37156**

RPS-supply manifolds reduce and simplify tubing. They allow a space-saving and clear, compact design. The RPS manifolds have a common compressed air supply (P) and common vent lines (R, S). Valves can be mounted in groups of 2-10.

The delivery includes:
RPS-supply manifold
Mounting screws
O-rings

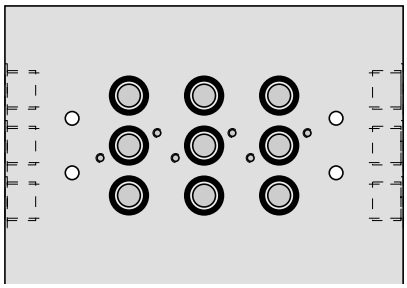

Order Instructions and Weights

Order Instructions Type	Order No.	consisting of Manifold	Screws	O-rings	Weight (kg)
RPSL-S9-1/4-2	**PD 44814-0002**	1	4	6	0.845
RPSL-S9-1/4-3	**PD 44814-0003**	1	6	9	1.045
RPSL-S9-1/4-4	**PD 44814-0004**	1	8	12	1.245
RPSL-S9-1/4-5	**PD 44814-0005**	1	10	15	1.445
RPSL-S9-1/4-6	**PD 44814-0006**	1	12	18	1.645
RPSL-S9-1/4-7	**PD 44814-0007**	1	14	21	1.845
RPSL-S9-1/4-8	**PD 44814-0008**	1	16	24	2.045
RPSL-S9-1/4-9	**PD 44814-0009**	1	18	27	2.245
RPSL-S9-1/4-10	**PD 44814-0010**	1	20	30	2.445

For product group list of directional valves G1/4 see 3.52.001E

A1P147E00JAA40X

The right to introduce technical modifications is reserved

HOERBIGER ORIGA

5/2 Way Valve

G1/4

with NAMUR connections

Actuation:
Electrically pilot operated with standard solenoids
- by permanent signal
- by impulse

Series S9

S9 581..-1/4 SO

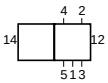

Characteristics to VDI 3290 Pressures quoted as gauge pressure

Characteristics		Symbol	Unit	Description	
General Features					
Type				Spool valve	
Mounting				2 screws M5	
Tube connection				Thread	
Port size				G 1/4; 11 deep (connections 1, 3, 5)	
Weight (mass)			kg	0.6 - permanent signal version 0.7 - impulse version	
Installation				In any position	
Ambient temperature range		ϑ_{min} ϑ_{max}	°C °C	-10 +60	Note: When using below freezing
Medium temperature range		ϑ_{min} ϑ_{max}	°C °C	-10 +70	point (°C) it is necessary to consult us.
Medium				Filtered compressed air	
Lubrication				With or without oil mist lubrication[1)]	
Pneumatic Characteristics					
Nominal pressure		p_n	bar	6	
Operating pressure range		p_{min} p_{max}	bar bar	Permanent signal version 2 10	
		p_{min} p_{max}	bar bar	Impulse version 1.5 10	
Nominal flow		Q_N	l/min	1300	
Actuation					
Electrical				Pilot operated	
Voltage				AC	DC
Nominal voltage*	Standard version	U_n	V	220	24
	Low watt. version	U_n	V	220	24
	Ex-proof-version **	U_n	V	220	24
				Further voltages available on request	
Initial power consumption	Standard version		VA (W)	8.5	2.5
	Low watt. version		VA (W)	6.6	2.1
	Ex-proof-version **		VA (W)	5.0	5.1
Continuous consumption	Standard version		VA (W)	6.0	2.5
	Low watt. version		VA (W)	3.9	2.1
	Ex-proof-version **		VA (W)	5.0	5.1
Duty cycle		ED	%	100	100
Electrical protection				IP65 to DIN 40050 (with plug)	
Insulating material				F (Ex-version E) to VDE 0580	
Connection				Plug to DIN 43650 form B [2)] Ex-version: Cable 1200 mm long	

* See Order Instructions for details
** For explosion-proof versions different technical requirements apply, according to Declaration of Conformity
1) We recommend the use of mineral oil type VG32 to ISO 3448
2) Plug for low wattage version available in DIN 43650 form A

The delivery includes:
1 Valve
2 Mounting screws
1 Coding pin
2 O-rings

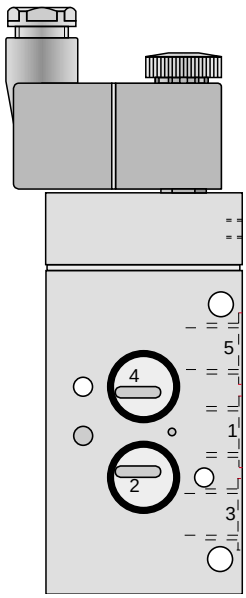

A1P427E00FX40X

The right to introduce technical modifications is reserved

For product group list see 3.52.001E

Data Sheet No. 3.52.500E-1

HOERBIGER ORIGA

Dimensions (mm)

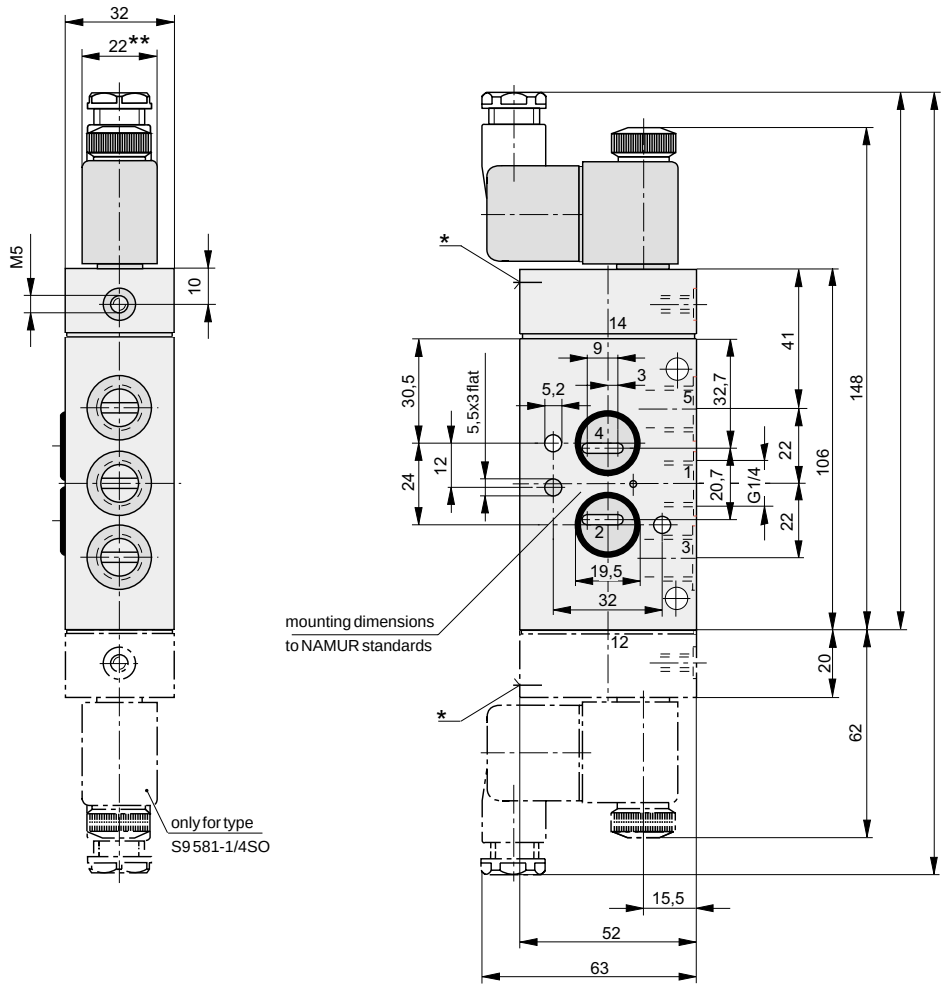

* Manual override
** Solenoid width is 30 mm on ex-proof version and low attage coil version

Order Instructions

Actuation	Return	Symbol	Order Instructions Type	Order No.
Electrical by permanent signal	Spring return	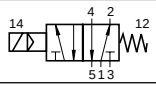	**S9 581RF-1/4 SO-..**	**PD 34985-..33**
Electrical by impulse	Electrical by impulse	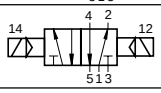	**S9 581-1/4 SO-..**	**PD 34986-..33**

Solenoid version	Nominal voltage	Applicable for	Key code
Standard version	220 V/50 (60) Hz	110 V=	61
	24 V=	48 V/50 (60) Hz	02
Low wattage version	24 V=		13
	220 V/50 (60) Hz		69
Ex-proof version *	24 V=		48
	220 V/50 (60) Hz		98

* For explosion-proof versions different technical requirements apply, according to Declaration of Conformity

Further voltages available on request.

5/2 Way Oscillating Valve

G1/4

Series S9

S9 568/68-1/4-SO

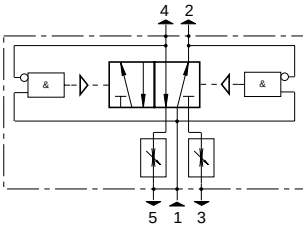

The oscillating valve generates oscillating movements such as e.g. shaking, hammering, plunging, feed motions etc.

Functioning:
If compressed air is introduced into inlet port 1, the outlet ports 4 and 2 are alternately supplied with compressed air.
The speed of the operated cylinder and also the stroke frequency are adjusted with two exhaust air throttles.

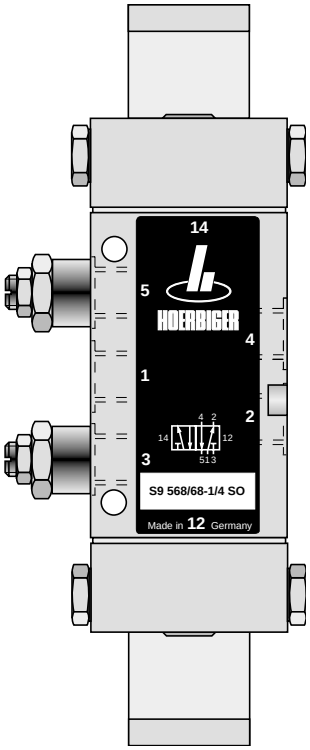

Characteristics to VDI 3290			Pressures quoted as gauge pressure
Characteristics	Symbol	Unit	Description
General Features			
System			Spool valve
Mounting			2 screws M6 (M4)
Tube connection			Thread
Port size			G1/4; 11 deep
Weight (mass)		kg	0.65
Installation			In any position
Ambient temperature range	ϑ_{min} ϑ_{max}	°C °C	-10 +60
Medium temperature range	ϑ_{min} ϑ_{max}	°C °C	-10 +70
			Note: When using below freezing point (°C) it is necessary to consult us
Medium			Filtered compressed air
Lubrication			With or without oil mist lubrication [1]
Pneumatic Characteristics			
Nominal pressure	p_n	bar	6
Operating pressure range	p_{min} p_{max}	bar bar	2.5 8
Nominal flow	Q_N	l/min	1300
Actuation			
Pneumatic			Direct
Actuation pressure range	$p_{st\,min}$ $p_{st\,max}$	bar bar	2.5 8

[1] We recommend mineral oil of the viscosity class VG32 to ISO 3448

Dimensions (mm)

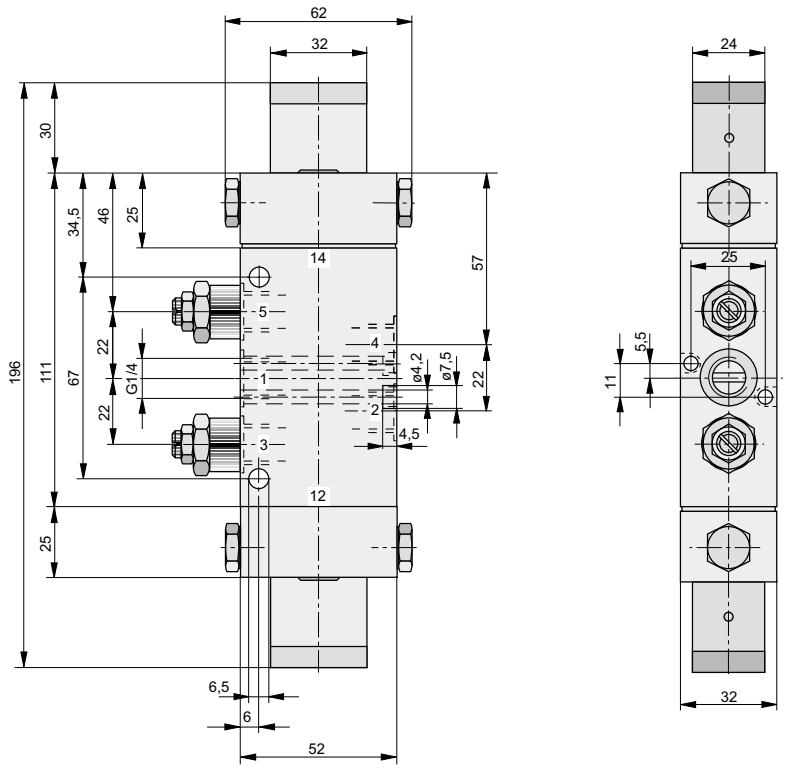

Order No.: S9 568/68-1/4-SO PD 34796

Data Sheet No. 3.52.545E

A1P158E00FX40X

The right to introduce technical modifications is reserved

HOERBIGER ORIGA

5 / 2 Way Valve

G1 / 4

for two hand safety operation

Actuation: Pneumatic

Series S9

S9 563/65RF-1/4-SO

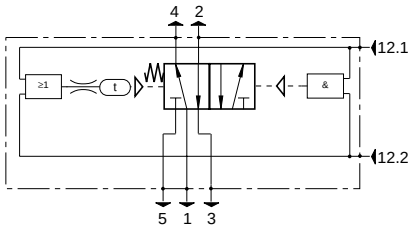

2 hand operated valve for pneumatically controlled machines and equipment.

- The valve only switches from outlet port 4 to outlet port 2 if both signal inlets are simultaneously actuated or are actuated within 0.5 s.
- The valve cannot be switched again until both actuating signals are stopped.
- For protecting operating personnel during manufacturing processes such as engraving, bending, stamping, burring etc.
- Not applicable for operating eccentric presses and presses of similar design.

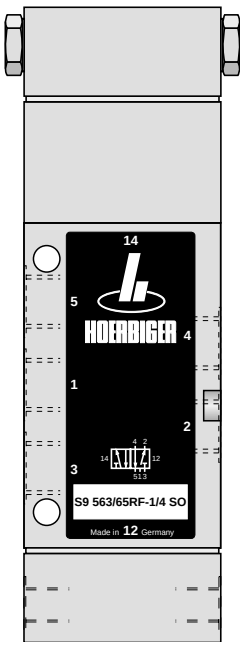

Characteristics according to VDI 3290 Pressures quoted as gauge pressure

Characteristics	Symbol	Unit	Description
General features			
System			Spool valve
Mounting			2 screws M6
Tube connection			Thread
Port size			4; 2; 5; 1; 3: G1/4 12,1; 12,2: G1/8
Weight (mass)		kg	0.64
Installation			In any position
Ambient temperature range	ϑ_{min} ϑ_{max}	°C °C	-10 +60
Medium temperature range	ϑ_{min} ϑ_{max}	°C °C	-10 +70
Medium			Filtered compressed air
Lubrication			with or without oil mist lubrication [1]
Pneumatic Characteristics			
Nominal pressure	p_n	bar	6
Operating pressure range	p_{min} p_{max}	bar bar	0 10
Nominal flow	Q_N	l/min	1300
Actuation			
Pneumatically			Directly
Control pressure range	$p_{st\,min}$ $p_{st\,max}$	bar bar	3 10

Note: When using below freezing point (°C) it is necessary to consult us

[1] We recommend mineral oil of the viscosity class VG32 according to ISO 3448

Dimensions (mm)

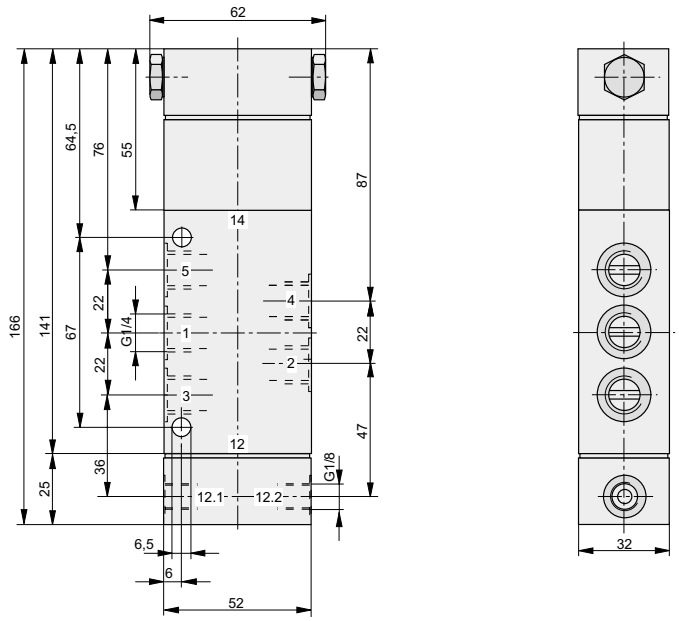

A1P167E00FX40X

The right to introduce technical modifications is reserved

Order No.: S9 563/65RF-1/4-SO PD 37173

Data Sheet No. 3.52.546E

3/2 Way Valve

G1/4

Actuation: Pedal

Series F

F 331..-08..

Characteristics to VDI 3290			Pressures quoted as gauge pressure	
Characteristics	Symbol	Unit	Description	
General Features				
System			Poppet valve	
Mounting			After removing the rubber footing 4 screws M8	
Tube connection			Thread	
Port size			G1/4	
Weight (mass)		kg	1.5	
Installation			In any position	
Ambient temperature range	ϑ_{min} ϑ_{max}	°C °C	-10 +55	Note: When using below freezing point (°C) it is necessary to consult us
Medium temperature range	ϑ_{min} ϑ_{max}	°C °C	-10 +60	
Medium			Filtered compressed air	
Lubrication			Oil mist lubrication compatible with Buna N	
Pneumatic Characteristics				
Nominal pressure	p_n	bar	6	
Operating pressure range	p_{min} p_{max}	bar bar	0 10	
Nominal flow	Q_N	l/min	1400	
Actuation				
Manual control			Direct	
Stroke		mm	2	
Actuating force	Fb	N	approx. 30	Type: F 331RF-08NG Type: F 331RF-08NO Type: F 331-08NG Type: F 331-08NO

A1P164E00FX40X

The right to introduce technical modifications is reserved

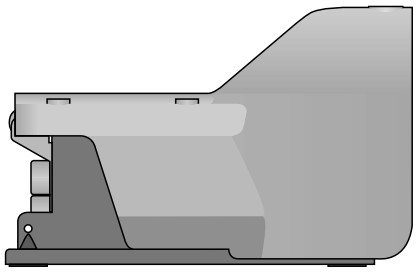

HOERBIGER ORIGA

Dimensions (mm)

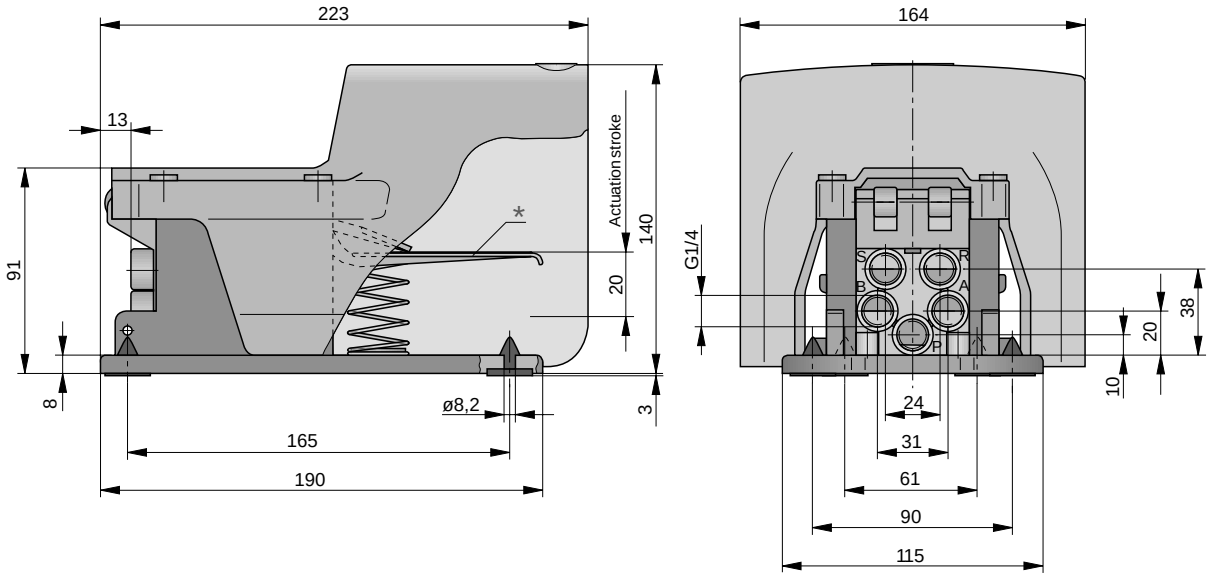

Connection:
Version "normally closed": P, B, S
Version "normally open": P, A, R

* Only for version "both switch positions indexed" - return is only effected after actuating the locking pedal.

Mounting instruction:
Only use screw connections with max. wrench size across flats of 15.

Order Instructions

Actuation	Return	Symbol	Order Instructions Type	Order No.
Pedal	Spring return	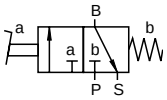	**F 331RF-08NG***	**KZ 4410**
		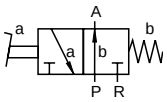	**F 331RF-08NO***	**KZ 4411**
Pedal both switch positions indexed	Without return	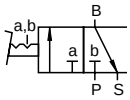	**F 331-08NG***	**KZ 4408**
		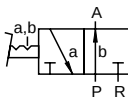	**F 331-08NO***	**KZ 4409**

* NG = normally closed, NO = normally open

5/2 Way Valve

G1/4

Actuation: Pedal

Series F

F 531..-08

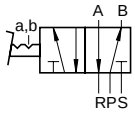

F 531RF-08

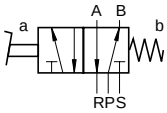

Characteristics to VDI 3290			Pressures quoted as gauge pressure
Characteristics	Symbol	Unit	Description
General Features			
System			Poppet valve
Mounting			After removing the rubber footing 4 screws M8
Tube connection			Thread
Port size			G1/4
Weight (mass)		kg	1.5
Installation			In any position
Ambient temperature range	ϑ_{min} ϑ_{max}	°C °C	-10 +55
Medium temperature range	ϑ_{min} ϑ_{max}	°C °C	-10 +60
Medium			Filtered compressed air
Lubrication			Oil mist lubrication compatible with Buna N
Pneumatic Characteristics			
Nominal pressure	p_n	bar	6
Operating pressure range	p_{min} p_{max}	bar bar	0 10
Nominal flow	Q_N	l/min	1400
Actuation			
Manual control			Direct
Stroke		mm	2
Actuating force	Fb	N	approx. 30 Type: F 531RF-08 Type: F 531-08

Note: When using below freezing point (°C) it is necessary to consult us

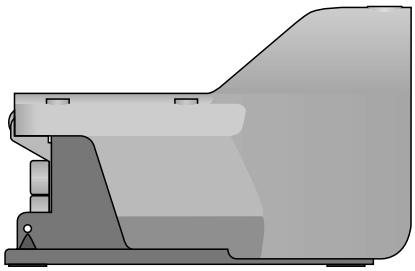

A1P165E00FX40X

The right to introduce technical modifications is reserved

Dimensions (mm)

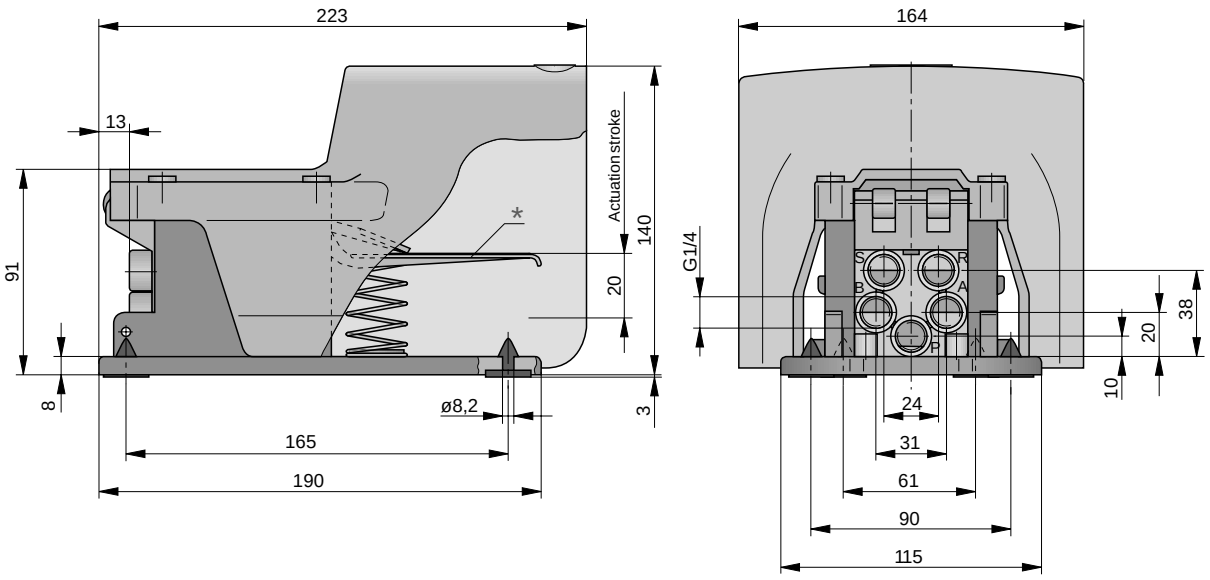

* Only for version "both switch positions indexed" - return is only effected after actuating the locking pedal.

Mounting instruction:
Only use screw connections with max. wrench size across flats of 15.

Order Instructions

Actuation	Return	Symbol	Order Instructions Type	Order No.
Pedal	Spring return	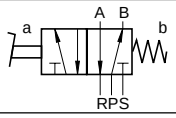	**F 531RF-08**	**KZ 4413**
Pedal both switch positions indexed	Without return	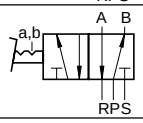	**F 531-08**	**KZ 4412**

PNEUMATIC

GROUP

5/2 AND 5/3 WAY VALVES G1/2 SERIES S9

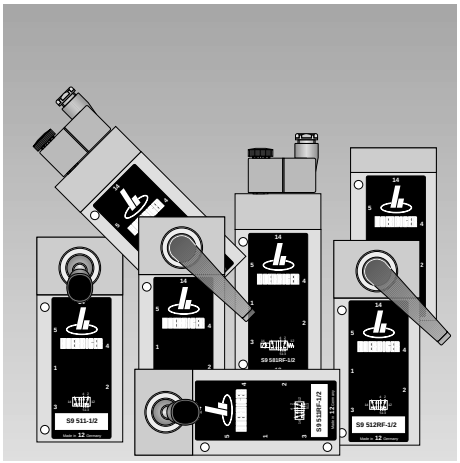

HOERBIGER

ORIGA

5/2 Way Valves				
Actuation	Symbol	Order Instructions Type	Order No.	Data Sheet No.
Hand lever, indexed	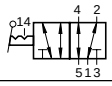	**S9 511-1/2**	**PA 16367**	3.53.002E
Hand lever, spring return	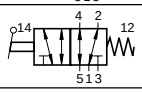	**S9 511RF-1/2**	**PA 16366**	3.53.002E
Hand lever secured in 2 switching positions	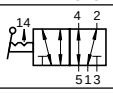	**S9 511S-1/2**	**PA 16368**	3.53.002E
Rotary lever, indexed	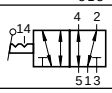	**S9 512-1/2**	**PA 16378**	3.53.003E
Rotary lever, spring return	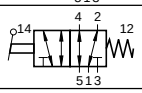	**S9 512RF-1/2**	**PA 16379**	3.53.003E
Pneumatic by permanent signal	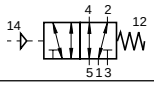	**S9 561RF-1/2**	**PA 16165**	3.53.004E
Pneumatic by impulse	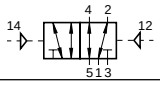	**S9 561-1/2**	**PA 16166**	3.53.004E
Pneumatic by impulse, differential piston	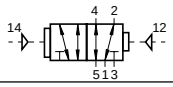	**S9 562-1/2**	**PA 16167**	3.53.004E
Electrical by permanent signal	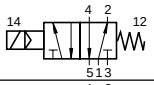	**S9 581RF-1/2-..**	**PA 16171-..33**	3.53.005E
with external pilot air	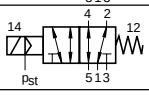	**S9 581S-RF-1/2-..**	**PA 16174-..33**	3.53.005E
Electrical by impulse	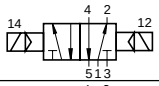	**S9 581-1/2-..**	**PA 16172-..33**	3.53.005E
with external pilot air	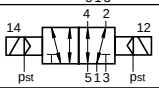	**S9 581S-1/2-..**	**PA 16175-..33**	3.53.005E
Electrical by impulse, differential piston	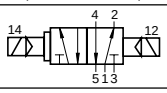	**S9 582-1/2-..**	**PA 16173-..33**	3.53.005E

Solenoid Version	Nominal Voltage	Applicable for	Key Code
Standard version	220 V/50 (60) Hz	110 V=	61
	24 V=	48 V/50 (60) Hz	02
Low wattage version	24 V=		13
	220 V/50 (60) Hz		69
Ex-proof version *	24 V=		48
	220 V/50 (60) Hz		98

* For explosion-proof versions different technical requirements apply, according to Declaration of Conformity

Further voltages available on request.

5/2 Way Valves				
Actuation	Symbol	Order Instructions Type	Order No.	Data Sheet No.
Hand lever, indexed	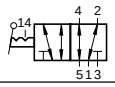	**S9 511-1/2**	**PA 16367**	3.53.050E
Hand lever, spring return	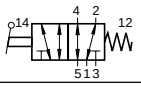	**S9 511RF-1/2**	**PA 16366**	3.53.050E
Hand lever secured in 2 switching positions	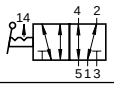	**S9 511S-1/2**	**PA 16368**	3.53.050E
Rotary lever, indexed	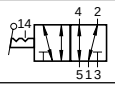	**S9 512-1/2**	**PA 16378**	3.53.051E
Rotary lever, spring return	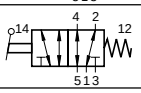	**S9 512RF-1/2**	**PA 16379**	3.53.051E
Pneumatic by permanent signal	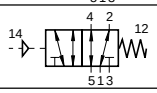	**S9 561RF-1/2**	**PA 16165**	3.53.052E
Pneumatic by impulse	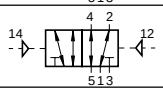	**S9 561-1/2**	**PA 16166**	3.53.052E
Pneumatic by impulse, differential piston	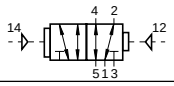	**S9 562-1/2**	**PA 16167**	3.53.052E
Electrical by permanent signal	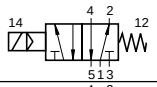	**S9 581RF-1/2-..**	**PA 16171-..33**	3.53.053E
with external pilot air	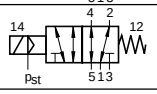	**S9 581S-RF-1/2-..**	**PA 16174-..33**	3.53.053E
Electrical by impulse	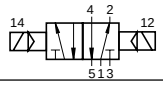	**S9 581-1/2-..**	**PA 16172-..33**	3.53.053E
with external pilot air	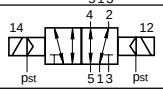	**S9 581S-1/2-..**	**PA 16175-..33**	3.53.053E
Electrical by impulse, differential piston	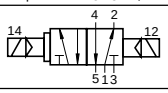	**S9 582-1/2-..**	**PA 16173-..33**	3.53.053E

Solenoid Version	Nominal Voltage	Applicable for	Key Code
Standard version	220 V/50 (60) Hz	110 V=	61
	24 V=	48 V/50 (60) Hz	02
Low wattage version	24 V=		13
	220 V/50 (60) Hz		69
Ex-proof version *	24 V=		48
	220 V/50 (60) Hz		98

* For explosion-proof versions different technical requirements apply, according to Declaration of Conformity

Further voltages available on request.

5/3-Way Valves				
Actuation	Symbol	Order Instructions Type	Order No.	Data Sheet No.
Hand lever indexed in 3 switching positions	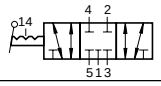	**S9 511G-1/2**	**PA 16369**	3.53.100E
	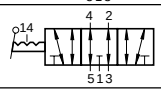	**S9 511E-1/2**	**PA 16370**	3.53.018E
	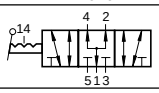	**S9 511B-1/2**	**PA 16371**	3.53.018E
Hand lever spring return to middle position	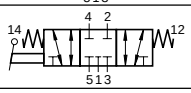	**S9 511RFG-1/2**	**PA 16372**	3.53.018E
	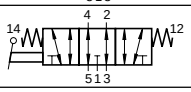	**S9 511RFE-1/2**	**PA 16373**	3.53.018E
	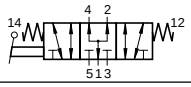	**S9 511RFB-1/2**	**PA 16374**	3.53.018E
Hand lever secured in 3 switching positions	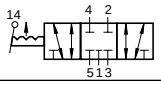	**S9 511SG-1/2**	**PA 16375**	3.53.018E
	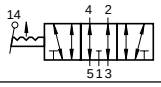	**S9 511SE-1/2**	**PA 16376**	3.53.018E
	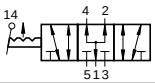	**S9 511SB-1/2**	**PA 16377**	3.53.018E
Rotary lever indexed in 3 switching positions	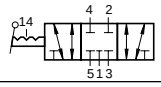	**S9 512G-1/2**	**PA 16380**	3.53.101E
	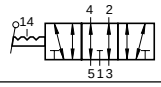	**S9 512E-1/2**	**PA 16381**	3.53.019E
	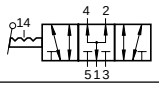	**S9 512B-1/2**	**PA 16382**	3.53.019E
Rotary lever spring return to middle position	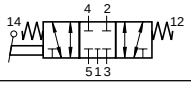	**S9 512RFG-1/2**	**PA 16383**	3.53.019E
	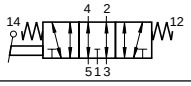	**S9 512RFE-1/2**	**PA 16384**	3.53.019E
	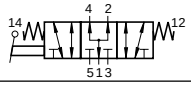	**S9 512RFB-1/2**	**PA 16385**	3.53.019E
Pneumatic by permanent signal, spring return to middle position	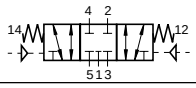	**S9 561RFG-1/2**	**PA 16168**	3.53.102E
	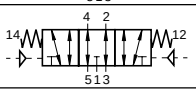	**S9 561RFE-1/2**	**PA 16169**	3.53.020E
	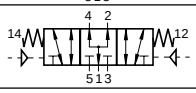	**S9 561RFB-1/2**	**PA 16170**	3.53.020E
Electrical by permanent signal, spring return to middle position	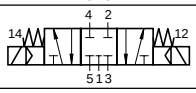	**S9 581RFG-1/2-..**	**PA 16176-..33**	3.53.103E
	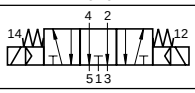	**S9 581RFE-1/2-..**	**PA 16177-..33**	3.53.021E
	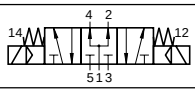	**S9 581RFB-1/2-..**	**PA 16178-..33**	3.53.021E

For Nominal Voltage see Page 2

For Key Code see Page 2

A3P072E42JAA40X

The right to introduce technical modifications is reserved

3/2 Way Valve

G1/2

Actuation: Hand lever

Series S9

S9 311-1/2

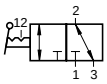

S9 311RF-1/2

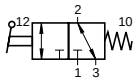

S9 311S-1/2

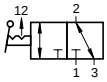

Characteristics to VDI 3290			Pressure quoted as gauge pressure
Characteristics	Symbol	Unit	Description
General Features			
Type			Spool valve
Mounting			2 screws M6
Tube connection			Thread
Port size			G1/2; 16 deep
Weight (mass)		kg	0.9
Installation			In any position
Ambient temperature range	ϑ_{min} ϑ_{max}	°C °C	-10 +60
Medium temperature range	ϑ_{min} ϑ_{max}	°C °C	-10 +70
Medium			Filtered compressed air
Lubrication			With or without oil mist lubrication [1]
Pneumatic Characteristics			
Nominal pressure	p_n	bar	6
Operating pressure range	p_{min} p_{max}	bar bar	0 10
Nominal flow	Q_N	l/min	3500
Actuation			
Manual control			Direct
Stroke		mm	9.4
Actuating force	F_b	N	Type S9 311(S)-1/2: 15 Type S9 311RF-1/2: 40

Note: When using below freezing point (°C), it is necessary to consult us.

[1] We recommend mineral oil of the viscosity class VG32 to ISO 3448

Dimensions (mm)

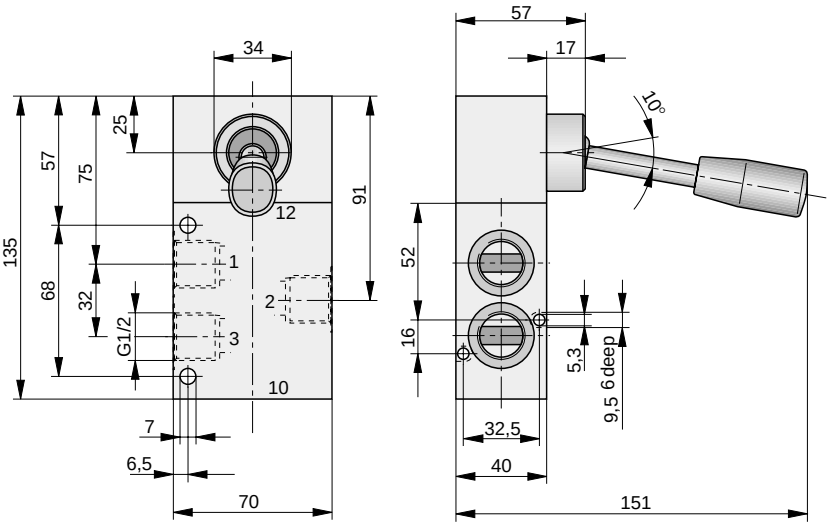

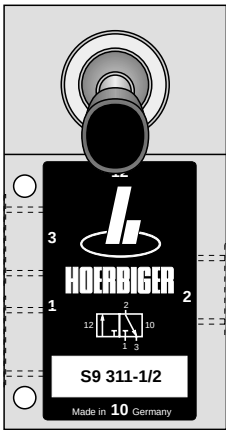

For product group list see 3.53.001E

Order Instructions:

S9 311-1/2	**PA 16404** (both switching positions indexed)
S9 311RF-1/2	**PA 16405** (with spring return)
S9 311S-1/2	**PA 16406** (secured in 2 switching positions)

Data Sheet No. 3.53.002E

A1P501E00JAA00X

The right to introduce technical modifications is reserved

HOERBIGER ORIGA

3/2 Way Valve

G1/2

Actuation: Rotary Lever

Series S9

S9 312-1/2

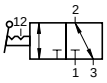

S9 312RF-1/2

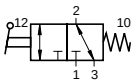

Characteristics to VDI 3290			Pressure quoted as gauge pressure	
Characteristics	Symbol	Unit	Description	
General Features				
Type			Spool valve	
Mounting			2 screws M6	
Tube connection			Thread	
Port size			G1/2; 16 deep	
Weight (mass)		kg	0.95	
Installation			In any position	
Ambient temperature range	ϑ_{min} ϑ_{max}	°C °C	-10 +60	Note: When using below freezing point (°C), it is necessary to consult us.
Medium temperature range	ϑ_{min} ϑ_{max}	°C °C	-10 +70	
Medium			Filtered compressed air	
Lubrication			With or without oil mist lubrication [1)]	
Pneumatic Characteristics				
Nominal pressure	p_n	bar	6	
Operating pressure range	p_{min} p_{max}	bar bar	0 10	
Nominal flow	Q_N	l/min	3500	
Actuation				
Manual control			Direct	
Stroke		mm	9.4	
Actuating force	F_b	N	Type S9 312-1/2: 5 Type S9 312RF-1/2: 15	

[1)] We recommend mineral oil of the viscosity class VG32 to ISO 3448

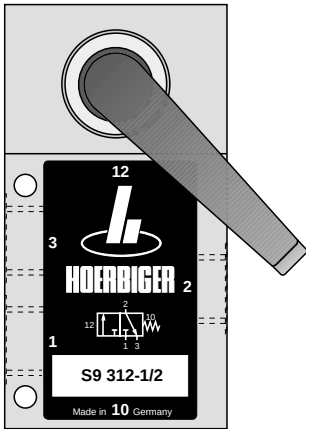

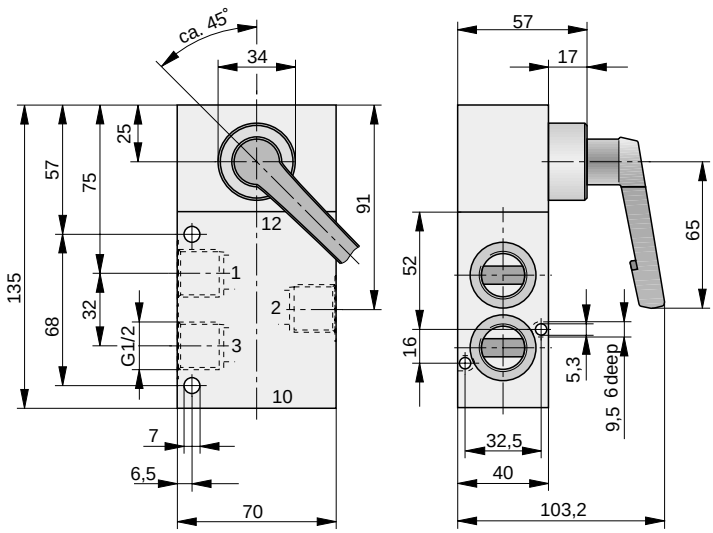

For product group list see 3.53.001E

Order Instructions:
S9 312-1/2 **PA 16407** (both switching positions indexed)
S9 312RF-1/2 **PA 16408** (with spring return)

Data Sheet No. 3.53.003E

A1P502E00JAA00X

The right to introduce technical modifications is reserved

3/2 Way Valve

G1/2

Actuation:
Pneumatic
- by permanent signal
- by impulse

Series S9

S9 36.

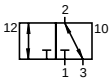

Characteristics to VDI 3290			Pressures quoted as gauge pressure	
Characteristics	Symbol	Unit	Description	
General Features				
Type			Spool valve	
Mounting			2 screws M6	
Tube connection			Thread	
Port size			G1/2; 16 deep	
Weight (mass)		kg	0.70 - permanent signal version 0.65 - impulse version	
Installation			In any position	
Ambient temperature range	ϑ_{min} ϑ_{max}	°C °C	-10 +60	Note: When using below freezing
Medium temperature range	ϑ_{min} ϑ_{max}	°C °C	-10 +70	point (°C) it is necessary to consult us.
Medium			Filtered compressed air	
Lubrication			With or without oil mist lubrication[1)]	
Pneumatic Characteristics				
Nominal pressure	p_n	bar	6	
Operating pressure range	p_{min} p_{max}	bar bar	0 10	
Nominal flow	Q_N	l/min	3500	
Actuation				
Pneumatic			Direct	
Actuation pressure range	$p_{st\,min}$ $p_{st\,max}$	bar bar	Permanent signal version 2.2 10	
	$p_{st\,min}$ $p_{st\,max}$	bar bar	Impulse version 1.5 (361) 10	2.5 (362)

[1)] We recommend the use of mineral oil type VG 32 to ISO 3448

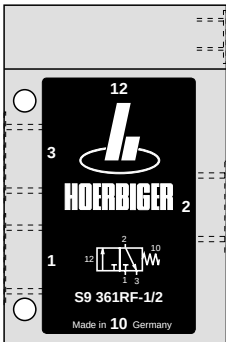

For product group list see 3.53.001E

Data Sheet No. 3.53.004E-1

A1P503E00JAA00X

The right to introduce technical modifications is reserved

HOERBIGER ORIGA

Dimensions (mm)

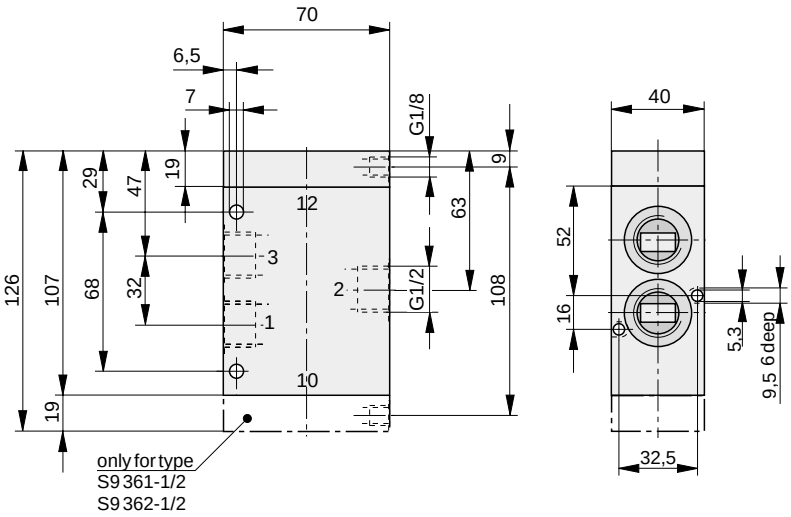

Order Instructions

Actuation	Return	Symbol	Order Instructions Type	Order No.
Pneumatic by permanent signal spring return	Spring return	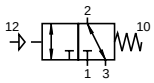	**S9 361RF-1/2**	**PA 16409**
Pneumatic by impulse	Pneumatic by impulse	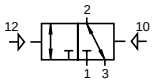	**S9 361-1/2**	**PA 16410**
Pneumatic by impulse, differential piston	Pneumatic by impulse	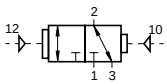	**S9 362-1/2**	**PA 16411**

3/2 Way Valve

G1/2

Actuation:
Electrically pilot operated with standard solenoids
- by permanent signal
- by impulse

Series S9

S9 38.

Characteristics to VDI 3290			Pressures quoted as gauge pressure		
Characteristics	Symbol	Unit	Description		
General Features					
Type			Spool valve		
Mounting			2 screws M6		
Tube connection			Thread		
Port size			G 1/2; 16 deep		
Weight (mass)		kg	0.77 - permanent signal version 0.60 - impulse version		
Installation			In any position		
Ambient temperature range	ϑ_{min} ϑ_{max}	°C °C	-10 +60	Note: When using below freezing	
Medium temperature range	ϑ_{min} ϑ_{max}	°C °C	-10 +70	point (°C) it is necessary to consult us.	
Medium			Filtered compressed air		
Lubrication			With or without oil mist lubrication[1)]		
Pneumatic Characteristics					
Nominal pressure	p_n	bar	6		
Operating pressure range	p_{min} p_{max}	bar bar	Permanent signal version 2.2 10		(0-10 Type S)
	p_{min} p_{max}	bar bar	Impulse version 1.5 (381) 10	2.5 (382)	
Nominal flow	Q_N	l/min	3500		
Actuation					
Electrical			Pilot operated Pilot operated with external pilot air		
Actuation pressure range (Type S)	$p_{st\ min}$ $p_{st\ max}$	bar bar	Permanent signal version 2.2 10		
	$p_{st\ min}$ $p_{st\ max}$	bar bar	Impulse version 1.5 (381) 10	2.5 (382)	
Voltage			AC	DC	
Nominal voltage* — Standard version	U_n	V	220	24	
Nominal voltage* — Low watt. version	U_n	V	220	24	
Nominal voltage* — Ex-proof-version **	U_n	V	220	24	
			Further voltages available on request		
Initial power consumption — Standard version		VA (W)	11	4.8	
Initial power consumption — Low watt. version		VA (W)	7.8	2.7	
Initial power consumption — Ex-proof-version **		VA (W)	5.0	5.1	
Continuous consumption — Standard version		VA (W)	8.5	4.8	
Continuous consumption — Low watt. version		VA (W)	4.9	2.7	
Continuous consumption — Ex-proof-version **		VA (W)	5.0	5.1	
Duty cycle	ED	%	100		
Electrical protection			IP65 to DIN 40050 (with plug)		
Insulating material			F (Ex-version E) to VDE 0580		
Connection			Plug to DIN 43650 form B [2)] Ex-version: Cable 1200 mm long		

* See Order Instructions for details
** For explosion-proof versions different technical requirements apply, according to Declaration of Conformity
[1)] We recommend the use of mineral oil type VG32 to ISO 3448
[2)] Plug for low wattage version available in DIN 43650 form A.

Variants:
S = with external pilot air

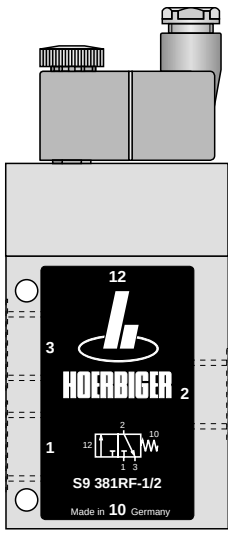

For product group list see 3.53.001E

Data Sheet No. 3.53.005E-1

A1P504E00JAA00X

The right to introduce technical modifications is reserved

HOERBIGER ORIGA

Dimensions (mm)

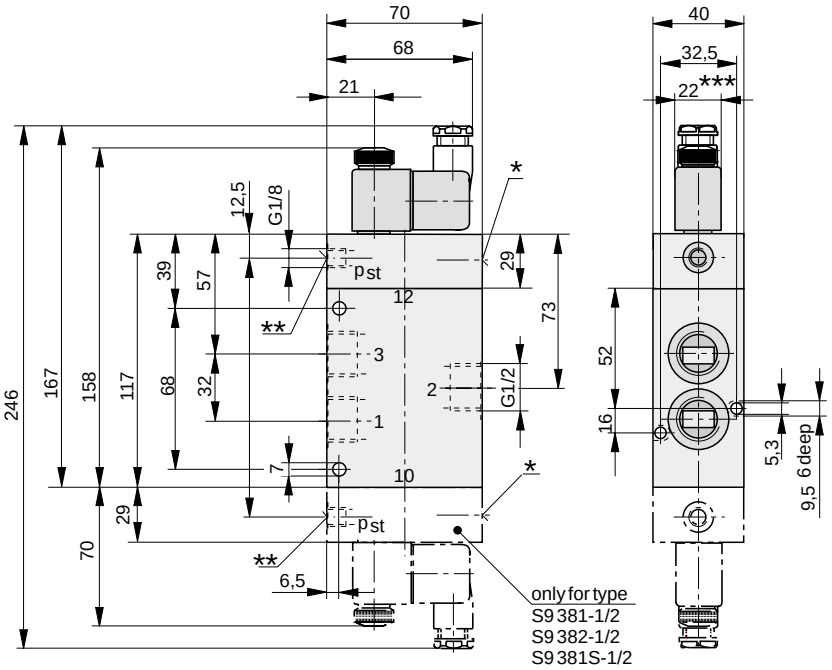

* Manual override
** Pilot connection p_{st} only required for types S9 581S
*** Solenoid width is 30 mm on ex-proof version and low wattage coil version

Order Instructions

Actuation	Return	Symbol	Order Instructions Type	Order No.
Electrical by permanent signal	Spring return	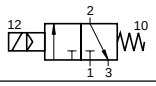	**S9 381RF-1/2-NG**	**PA 16412-..33**
		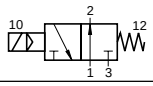	**S9 381RF-1/2-NO**	**PA 16413-..33**
with external pilot air	Spring return	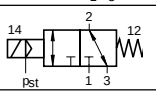	**S9 381S-RF-1/2-..**	**PA 16415-..33**
Electrical by impulse	**Electrical by impulse**	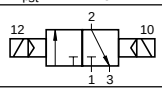	**S9 381-1/2-..**	**PA 16414-..33**
with external pilot air	with external pilot air	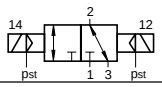	**S9 381S-1/2-..**	**PA 16417-..33**
Electrical by impulse Differentialkolben	**Electrical by impulse**	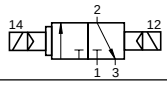	**S9 382-1/2-..**	**PA 16418-..33**
with external pilot air **differential piston**	**Electrical by impulse**	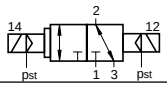	**S9 382S-1/2-..**	**PA 16419-..33**

Solenoid version	Nominal voltage	Applicable for	Key code
Standard version	220 V/50 (60) Hz	110 V=	61
	24 V=	48 V/50 (60) Hz	02
Low wattage version	24 V=		13
	220 V/50 (60) Hz		69
Ex-proof version *	24 V=		48
	220 V/50 (60) Hz		98

* For explosion-proof versions different technical requirements apply, according to Declaration of Conformity

Further voltages available on request.

5/2 Way Valve

G1/2

Actuation:
Hand lever
Safety hand lever

Series S9

S9 511-1/2

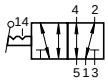

S9 511RF-1/2

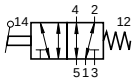

S9 511S-1/2

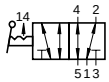

Characteristics to VDI 3290			Pressure quoted as gauge pressure	
Characteristics	Symbol	Unit	Description	
General Features				
Type			Spool valve	
Mounting			2 screws M6	
Tube connection			Thread	
Port size			G1/2; 16 deep	
Weight (mass)		kg	1.20	
Installation			In any position	
Ambient temperature range	ϑ_{min} ϑ_{max}	°C °C	-10 +60	Note: When using below freezing point (°C), it is necessary to consult us.
Medium temperature range	ϑ_{min} ϑ_{max}	°C °C	-10 +70	
Medium			Filtered compressed air	
Lubrication			With or without oil mist lubrication [1)]	
Pneumatic Characteristics				
Nominal pressure	p_n	bar	6	
Operating pressure range	p_{min} p_{max}	bar bar	0 10	
Nominal flow	Q_N	l/min	3500	
Actuation				
Manual control			Direct	
Stroke		mm	9.4	
Actuating force	F_b	N	Type S9 511(S)-1/2: 15 Type S9 511RF-1/2: 40	

[1)] We recommend mineral oil of the viscosity class VG32 to ISO 3448

Dimensions (mm)

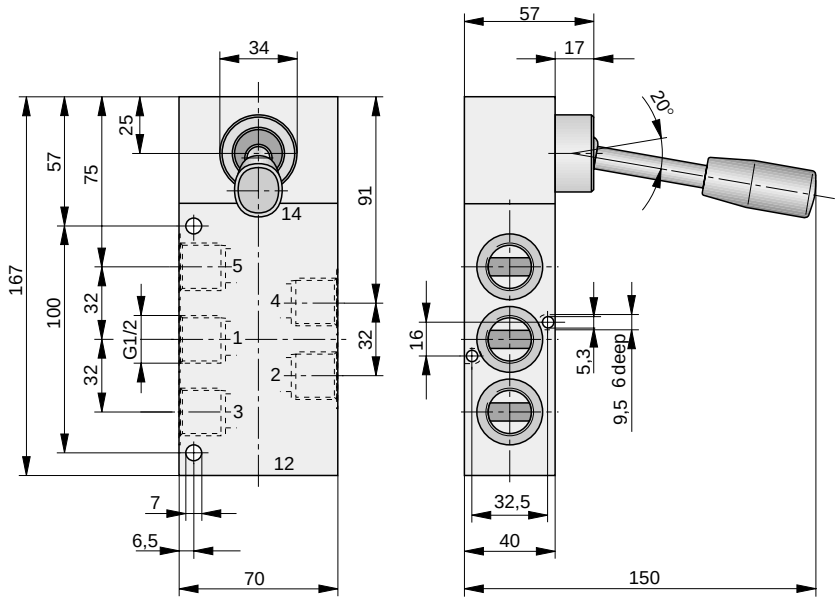

For product group list see 3.53.001E

Order Instructions:

S9 511-1/2	**PA 16367** (both switching positions indexed)
S9 511RF-1/2	**PA 16366** (with spring return)
S9 511S-1/2	**PA 16368** (secured in 2 switching positions)

Data Sheet No. 3.53.050E

A1P449E00JAA40X

The right to introduce technical modifications is reserved

5/2 Way Valve

G1/2

Actuation: Rotary Lever

Series S9

S9 512-1/2

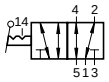

S9 512RF-1/2

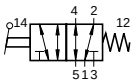

Characteristics to VDI 3290			Pressure quoted as gauge pressure
Characteristics	Symbol	Unit	Description
General Features			
Type			Spool valve
Mounting			2 screws M6
Tube connection			Thread
Port size			G1/2; 16 deep
Weight (mass)		kg	1.20
Installation			In any position
Ambient temperature range	ϑ_{min} ϑ_{max}	°C °C	-10 +60
Medium temperature range	ϑ_{min} ϑ_{max}	°C °C	-10 +70
			Note: When using below freezing point (°C), it is necessary to consult us.
Medium			Filtered compressed air
Lubrication			With or without oil mist lubrication [1]
Pneumatic Characteristics			
Nominal pressure	p_n	bar	6
Operating pressure range	p_{min} p_{max}	bar bar	0 10
Nominal flow	Q_N	l/min	3500
Actuation			
Manual control			Direct
Stroke		mm	9.4
Actuating force	F_b	N	Type S9 512-1/2: 5 Type S9 512RF-1/2: 15

[1] We recommend mineral oil of the viscosity class VG32 to ISO 3448

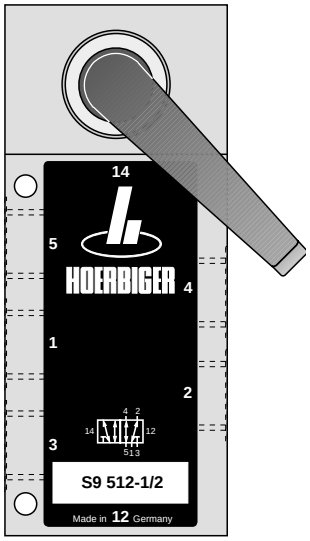

Dimensions (mm)

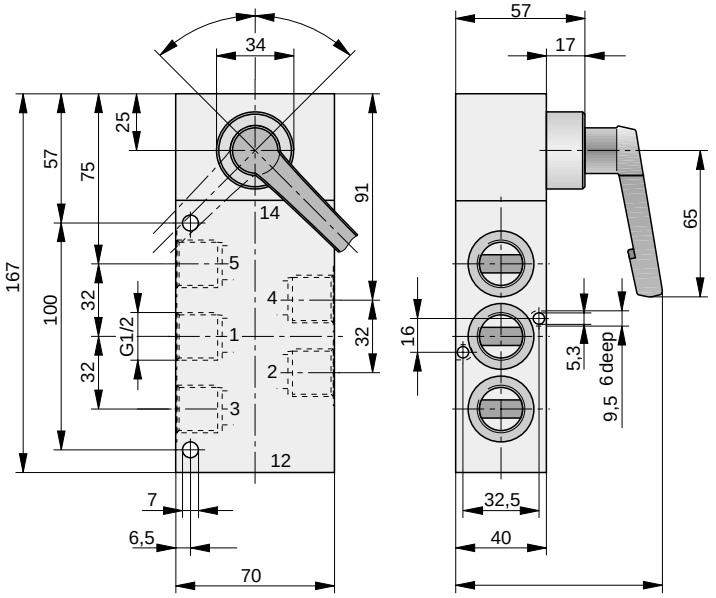

For product group list see 3.53.001E

Order Instructions:
S9 512-1/2 **PA 16378** (both switching positions indexed)
S9 512RF-1/2 **PA 16379** (with spring return)

Data Sheet No. 3.53.051E

A1P456E00JAA40X

The right to introduce technical modifications is reserved

5/2 Way Valve

G1/2

Actuation:
Pneumatic
- by permanent signal
- by impulse

Series S9

S9 56.

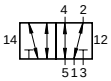

Characteristics to VDI 3290			Pressures quoted as gauge pressure	
Characteristics	Symbol	Unit	Description	
General Features				
Type			Spool valve	
Mounting			2 screws M6	
Tube connection			Thread	
Port size			G1/2; 16 deep	
Weight (mass)		kg	0.80 - permanent signal version 0.90 - impulse version	
Installation			In any position	
Ambient temperature range	ϑ_{min} ϑ_{max}	°C °C	-10 +60	Note: When using below freezing
Medium temperature range	ϑ_{min} ϑ_{max}	°C °C	-10 +70	point (°C) it is necessary to consult us.
Medium			Filtered compressed air	
Lubrication			With or without oil mist lubrication[1)]	
Pneumatic Characteristics				
Nominal pressure	p_n	bar	6	
Operating pressure range	p_{min} p_{max}	bar bar	0 10	
Nominal flow	Q_N	l/min	3500	
Actuation				
Pneumatic			Direct	
Actuation pressure range	$p_{st\,min}$ $p_{st\,max}$	bar bar	Permanent signal version 2.2 10	
	$p_{st\,min}$ $p_{st\,max}$	bar bar	Impulse version 1.5 (561) 10	2.5 (562)

[1)] We recommend the use of mineral oil type VG 32 to ISO 3448

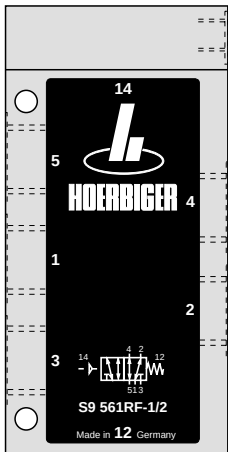

A1P437E00JAA50X

The right to introduce technical modifications is reserved

For product group list see 3.53.001E

Data Sheet No. 3.53.052E-1

HOERBIGER ORIGA

Dimensions (mm)

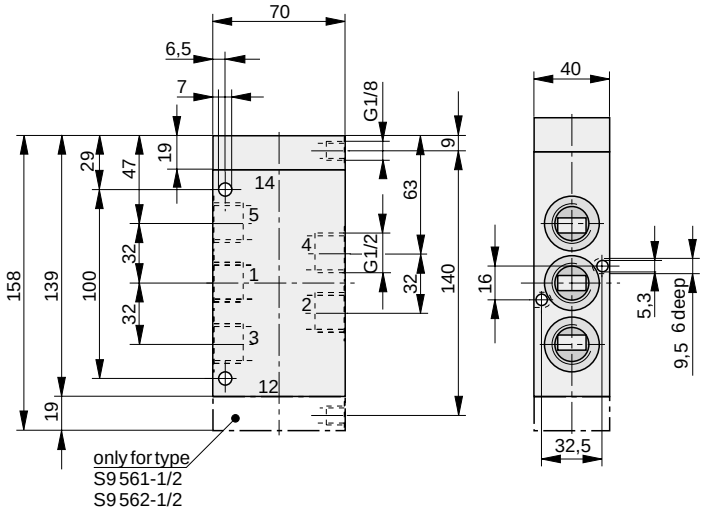

Order Instructions

Actuation	Return	Symbol	Order Instructions Type	Order No.
Pneumatic by permanent signal spring return	Spring return	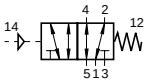	**S9 561RF-1/2**	**PA 16165**
Pneumatic by impulse	Pneumatic by impulse	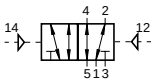	**S9 561-1/2**	**PA 16166**
Pneumatic by impulse, differential piston	Pneumatic by impulse	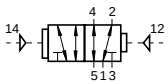	**S9 562-1/2**	**PA 16167**

5/2 Way Valve

G1/2

Actuation:
Electrically pilot operated with standard solenoids
- by permanent signal
- by impulse

Series S9

S9 58.

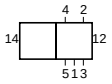

Characteristics to VDI 3290			Pressures quoted as gauge pressure		
Characteristics	Symbol	Unit	Description		
General Features					
Type			Spool valve		
Mounting			2 screws M6		
Tube connection			Thread		
Port size			G 1/2; 16 deep		
Weight (mass)		kg	1.0 - permanent signal version 1.1 - impulse version		
Installation			In any position		
Ambient temperature range	ϑ_{min} ϑ_{max}	°C °C	-10 +60	Note: When using below freezing	
Medium temperature range	ϑ_{min} ϑ_{max}	°C °C	-10 +70	point (°C) it is necessary to consult us.	
Medium			Filtered compressed air		
Lubrication			With or without oil mist lubrication[1)]		
Pneumatic Characteristics					
Nominal pressure	p_n	bar	6		
Operating pressure range	p_{min} p_{max}	bar bar	Permanent signal version 2.2 10		(0-10 Type S)
	p_{min} p_{max}	bar bar	Impulse version 1.5 (581) 10	2.5 (582)	
Nominal flow	Q_N	l/min	3500		
Actuation					
Electrical			Pilot operated Pilot operated with external pilot air		
Actuation pressure range (Type S)	$p_{st\ min}$ $p_{st\ max}$	bar bar	Permanent signal version 2.2 10		
	$p_{st\ min}$ $p_{st\ max}$	bar bar	Impulse version 1.5 (581) 10	2.5 (582)	
Voltage			AC	DC	
Nominal voltage* — Standard version	U_n	V	220	24	
Nominal voltage* — Low watt. version	U_n	V	220	24	
Nominal voltage* — Ex-proof-version **	U_n	V	220	24	
			Further voltages available on request		
Initial power consumption — Standard version		VA (W)	11	4.8	
Initial power consumption — Low watt. version		VA (W)	7.8	2.7	
Initial power consumption — Ex-proof-version **		VA (W)	5.0	5.1	
Continuous consumption — Standard version		VA (W)	8.5	4.8	
Continuous consumption — Low watt. version		VA (W)	4.9	2.7	
Continuous consumption — Ex-proof-version **		VA (W)	5.0	5.1	
Duty cycle	ED	%	100	100	
Electrical protection			IP65 to DIN 40050 (with plug)		
Insulating material			F (Ex-version E) to VDE 0580		
Connection			Plug to DIN 43650 form B [2)] Ex-version: Cable 1200 mm long		

* See Order Instructions for details
** For explosion-proof versions different technical requirements apply, according to Declaration of Conformity
[1)] We recommend the use of mineral oil type VG32 to ISO 3448
[2)] Plug for low wattage version available in DIN 43650 form A.

Variants:
S = with external pilot air

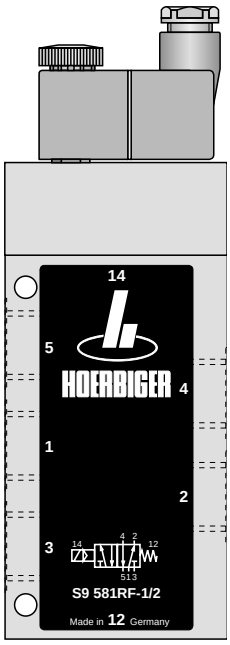

For product group list see 3.53.001E

Data Sheet No. 3.53.053E-1

A1P438E00JAA50X

The right to introduce technical modifications is reserved

HOERBIGER ORIGA

Dimensions (mm)

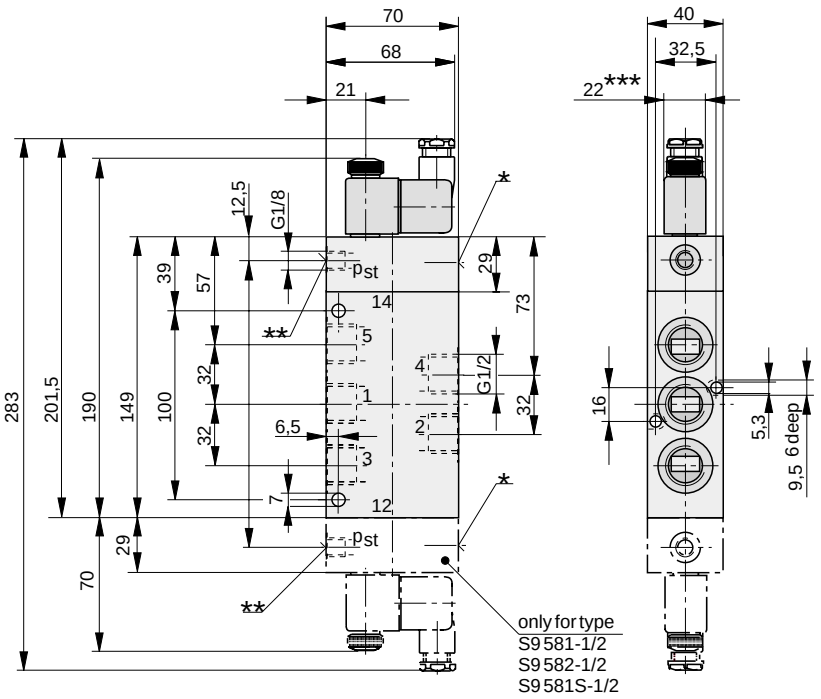

* Manual override
** Pilot connection p_{st} only required for types S9 581S
*** Solenoid width is 30 mm on ex-proof version and low wattage coil version

Order Instructions

Actuation	Return	Symbol	Order Instructions Type	Order No.
Electrical by permanent signal	Spring return	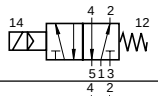	**S9 581RF-1/2-..**	**PA 16171-..33**
with external pilot air	Spring return	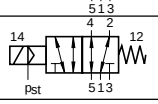	**S9 581S-RF-1/2-..**	**PA 16174-..33**
Electrical by impulse	Electrical by impulse	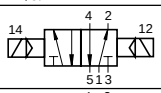	**S9 581-1/2-..**	**PA 16172-..33**
with external pilot air	with external pilot air	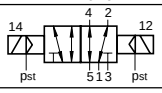	**S9 581S-1/2-..**	**PA 16175-..33**
Electrical by impulse differential piston	Electrical by impulse	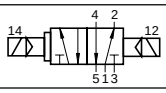	**S9 582-1/2-..**	**PA 16173-..33**

Solenoid version	Nominal voltage	Applicable for	Key code
Standard version	220 V/50 (60) Hz	110 V=	61
	24 V=	48 V/50 (60) Hz	02
Low wattage version	24 V=		13
	220 V/50 (60) Hz		69
Ex-proof version *	24 V=		48
	220 V/50 (60) Hz		98

* For explosion-proof versions different technical requirements apply, according to Declaration of Conformity

Further voltages available on request.

5/3 Way Valve

G1/2

Actuation:
Hand lever
Safety hand lever

Series S9

S9 511...-1/2
S9 511S.-1/2

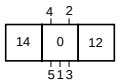

Characteristics to VDI 3290 Pressure quoted as gauge pressure

Characteristics	Symbol	Unit	Description	
General Features				
Type			Spool valve	
Mounting			2 screws M6	
Tube connection			Thread	
Port size			G 1/2; 16 deep	
Weight (mass)		kg	1.20	
Installation			In any position	
Ambient temperature range	ϑ_{min} ϑ_{max}	°C °C	-10 +60	Note: When using below freezing point (°C), it is necessary to consult us.
Medium temperature range	ϑ_{min} ϑ_{max}	°C °C	-10 +70	
Medium			Filtered compressed air	
Lubrication			With or without oil mist lubrication [1]	
Pneumatic Characteristics				
Nominal pressure	p_n	bar	6	
Operating pressure range	p_{min} p_{max}	bar bar	0 10	
Nominal flow	Q_N	l/min	3500 - Version G, RFG, SG 3300 - Version E, RFE, SE 3600 - Version B, RFB, SB	
Actuation				
Manual control			Direct	
Stroke		mm	9.4	

Actuation Forces

Type	Actuation Force (N)	Type	Actuation Force (N)
S9 511G(S)-1/2	15	S9 511RFG-1/2	40
S9 511E(S)-1/2		S9 511RFE-1/2	
S9 511B(S)-1/2		S9 511RFB-1/2	

[1] We recommend mineral oil of the viscosity class VG32 to ISO 3448

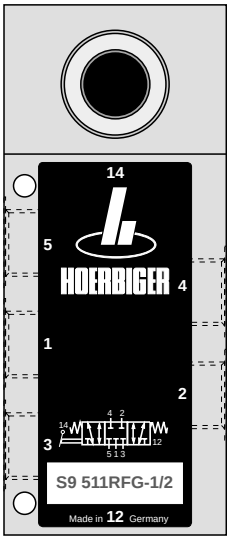

For product group list see 3.53.001E

Data Sheet No. 3.53.100E-1

A1P451E00JAA40X

The right to introduce technical modifications is reserved

HOERBIGER ORIGA

Dimensions (mm)

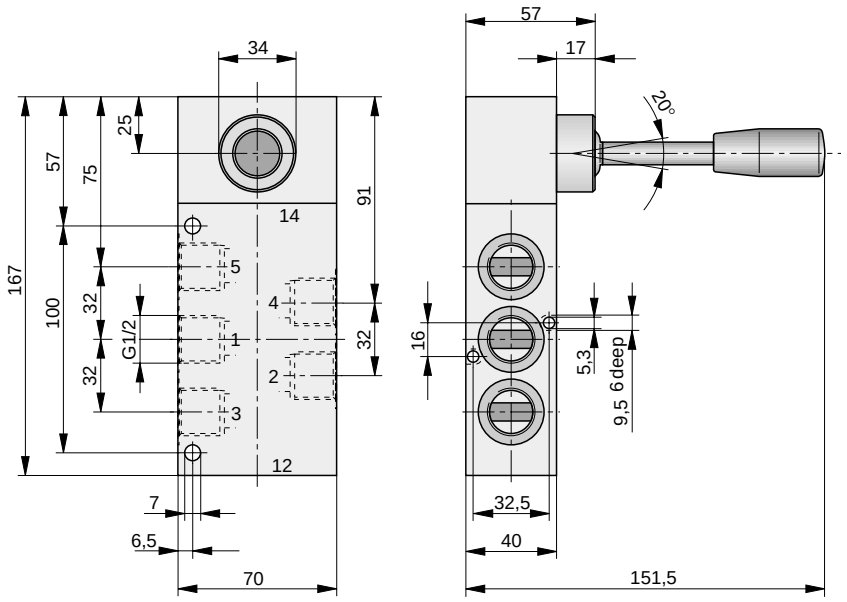

Order Instructions

Actuation	Middle position function	Symbol	Order Instructions Type	Order No.
Hand lever indexed in 3 switching positions	Middle position closed	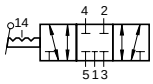	**S9 511G-1/2**	**PA 16369**
	Middle position exhausted	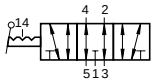	**S9 511E-1/2**	**PA 16370**
	Middle position pressurized	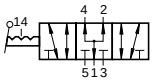	**S9 511B-1/2**	**PA 16371**
Hand lever spring return to middle position	Middle position closed	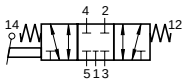	**S9 511RFG-1/2**	**PA 16372**
	Middle position exhausted	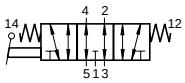	**S9 511RFE-1/2**	**PA 16373**
	Middle position pressurized	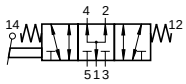	**S9 511RFB-1/2**	**PA 16374**
Hand lever secured in 3 switching positions	Middle position closed	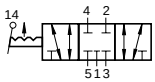	**S9 511SG-1/2**	**PA 16375**
	Middle position exhausted	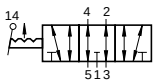	**S9 511SE-1/2**	**PA 16376**
	Middle position pressurized	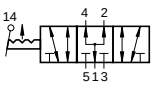	**S9 511SB-1/2**	**PA 16377**

5/3 Way Valve

G1/2

Actuation: Rotary lever

Series S9

S9 512...-1/2

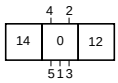

Characteristics to VDI 3290	Pressure quoted as gauge pressure			
Characteristics	Symbol	Unit	Description	
General Features				
Type			Spool valve	
Mounting			2 screws M6	
Tube connection			Thread	
Port size			G 1/2; 16 deep	
Weight (mass)		kg	1.20	
Installation			In any position	
Ambient temperature range	ϑ_{min} ϑ_{max}	°C °C	-10 +60	Note: When using below freezing point (°C), it is necessary to consult us.
Medium temperature range	ϑ_{min} ϑ_{max}	°C °C	-10 +70	
Medium			Filtered compressed air	
Lubrication			With or without oil mist lubrication [1]	
Pneumatic Characteristics				
Nominal pressure	p_n	bar	6	
Operating pressure range	p_{min} p_{max}	bar bar	0 10	
Nominal flow	Q_N	l/min	3500 - Version G, RFG 3300 - Version E, RFE 3600 - Version B, RFB	
Actuation				
Manual control			Direct	
Stroke		mm	9.4	

Actuation Forces			
Type	Actuation Force (N)	Type	Actuation Force (N)
S9 512G-1/4	5	S9 512RFG-1/4	15
S9 512E-1/4		S9 512RFE-1/4	
S9 512B-1/4		S9 512RFB-1/4	

[1] We recommend mineral oil of the viscosity class VG32 to ISO 3448

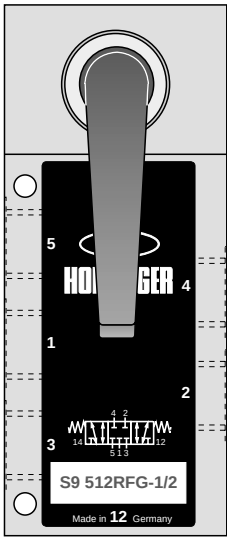

A1P457E00JAA40X

The right to introduce technical modifications is reserved

For product group list see 3.53.001E

Dimensions (mm)

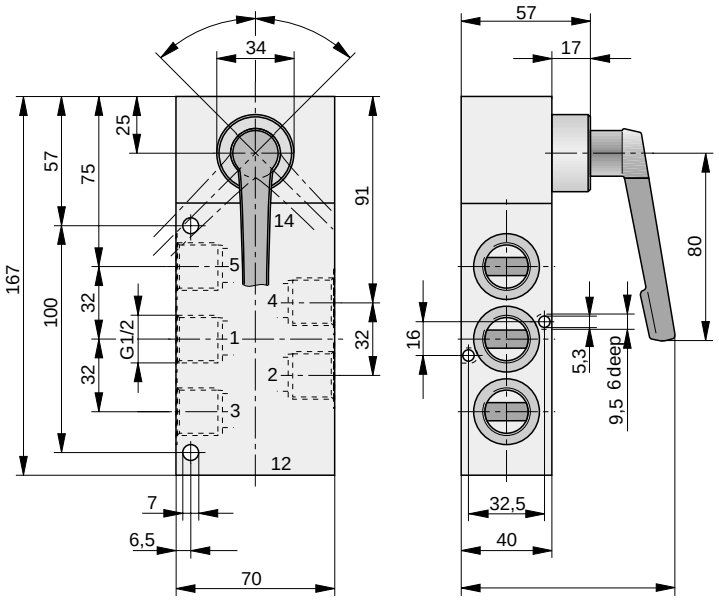

Order Instructions

Actuation	Middle position function	Symbol	Order Instructions Type	Order No.
Rotary lever indexed in 3 switching positions	Middle position closed	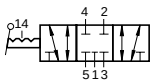	**S9 512G-1/2**	**PA 16380**
	Middle position exhausted	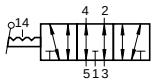	**S9 512E-1/2**	**PA 16381**
	Middle position pressurized	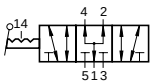	**S9 512B-1/2**	**PA 16382**
Rotary lever spring return to middle position	Middle position closed	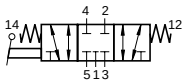	**S9 512RFG-1/2**	**PA 16383**
	Middle position exhausted	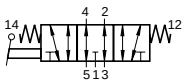	**S9 512RFE-1/2**	**PA 16384**
	Middle position pressurized	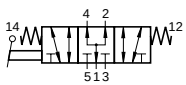	**S9 512RFB-1/2**	**PA 16385**

5/3 Way Valve

G1/2

Actuation:
Pneumatic by permanent signal

Series S9

S9 561RF.-1/2

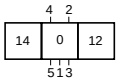

Characteristics to VDI 3290			Pressures quoted as gauge pressure
Characteristics	Symbol	Unit	Description
General Features			
Type			Spool valve
Mounting			2 screws M6
Tube connection			Thread
Port size			G1/2; 16 deep
Weight (mass)		kg	0.9
Installation			In any position
Ambient temperature range	ϑ_{min} ϑ_{max}	°C °C	-10 +60
Medium temperature range	ϑ_{min} ϑ_{max}	°C °C	-10 +70
Medium			Filtered compressed air
Lubrication			With or without oil mist lubrication[1)]
Pneumatic Characteristics			
Nominal pressure	p_n	bar	6
Operating pressure range	p_{min} p_{max}	bar bar	0 10
Nominal flow	Q_N	l/min	3500 - Type RFG 3600 - Type RFB 3300 - Type RFE
Actuation			
Pneumatic			Direct
Actuation pressure range	$p_{st\,min}$ $p_{st\,max}$	bar bar	2.5 10

Note: When using below freezing point (°C) it is necessary to consult us.

[1)] We recommend the use of mineral oil type VG32 to ISO 3448

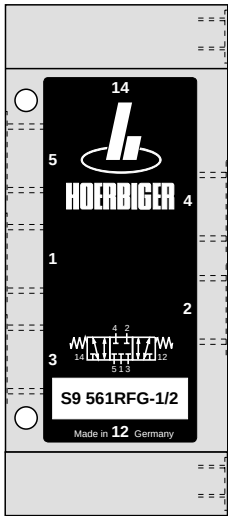

A1P440E00JAA50X

The right to introduce technical modifications is reserved

For product group list see 3.53.001E

HOERBIGER ORIGA

Dimensions (mm)

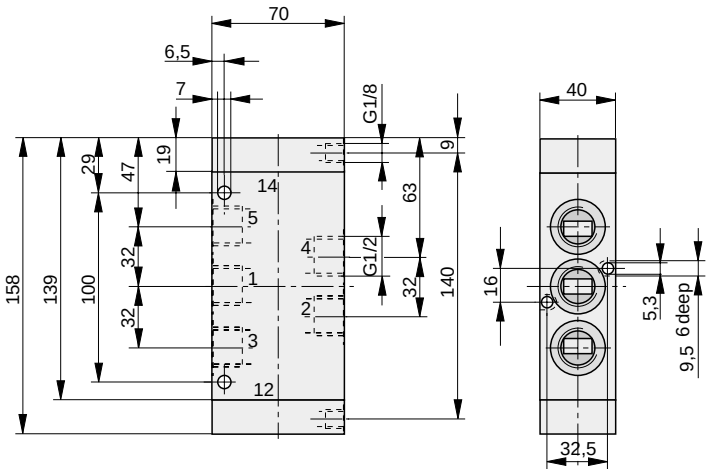

Order Instructions

Actuation	Middle position function	Symbol	Order Instructions Type	Order No.
Pneumatic by permanent signal, spring return to middle position	Middle position closed	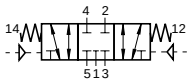	**S9 561RFG-1/2**	**PA 16168**
	Middle position exhausted	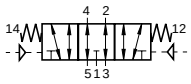	**S9 561RFE-1/2**	**PA 16169**
	Middle position pressurized	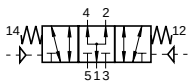	**S9 561RFB-1/2**	**PA 16170**

5/3 Way Valve

G1/2

Actuation:
Electrical pilot operation with standard solenoids - by permanent signal

Series S9

S9 581RF.-1/2

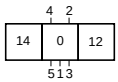

Characteristics to VDI 3290 Pressures quoted as gauge pressure

Characteristics		Symbol	Unit	Description	
General Features					
Type				Spool valve	
Mounting				2 screws M6	
Tube connection				Thread	
Port size				G 1/2; 16 deep	
Weight (mass)			kg	1.1	
Installation				In any position	
Ambient temperature range		ϑ_{min} ϑ_{max}	°C °C	-10 +60	Note: When using below freezing
Medium temperature range		ϑ_{min} ϑ_{max}	°C °C	-10 +70	point (°C) it is necessary to consult us.
Medium				Filtered compressed air	
Lubrication				With or without oil mist lubrication[1)]	
Pneumatic Characteristics					
Nominal flow		p_n	bar	6	
Operating pressure range		p_{min} p_{max}	bar bar	2.5 10	
Nominal flow		Q_N	l/min	3500 - Type RFG 3600 - Type RFB 3300 - Type RFE	
Actuation					
Electrical				Pilot operated	
Voltage				AC	DC
Nominal voltage*	Standard version	U_n	V	220	24
	Low watt. version	U_n	V	220	24
	Ex-proof-version **	U_n	V	220	24
				Further voltages available on request	
Initial power consumption	Standard version		VA (W)	11	4.8
	Low watt. version		VA (W)	7.8	2.7
	Ex-proof-version **		VA (W)	5.0	5.1
Continuous consumption	Standard version		VA (W)	8.5	4.8
	Low watt. version		VA (W)	4.9	2.7
	Ex-proof-version **		VA (W)	5.0	5.1
Duty cycle		ED	%	100	100
Electrical protection				IP65 to DIN 40050 (with plug)	
Insulating material				F (Ex-version E) to VDE 0580	
Connection				Plug to DIN 43650 form B[2)] Ex-version: Cable 1200 mm long	

* See Order Instructions for details
** For explosion-proof versions different technical requirements apply, according to Declaration of Conformity
1) We recommend the use of mineral oil type VG32 to ISO 3448
2) Plug for low wattage version available in DIN 43650 form A.

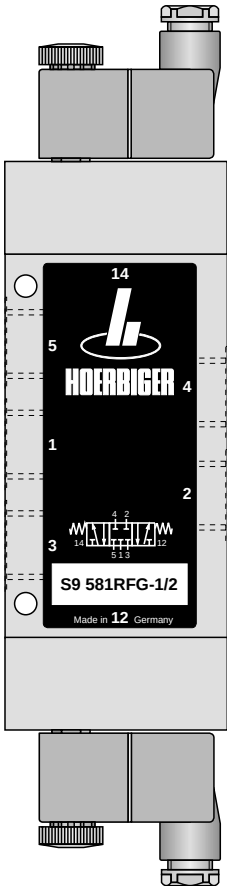

A1P441E00JAA50X

The right to introduce technical modifications is reserved

For product group list see 3.53.001E

HOERBIGER ORIGA

Dimensions (mm)

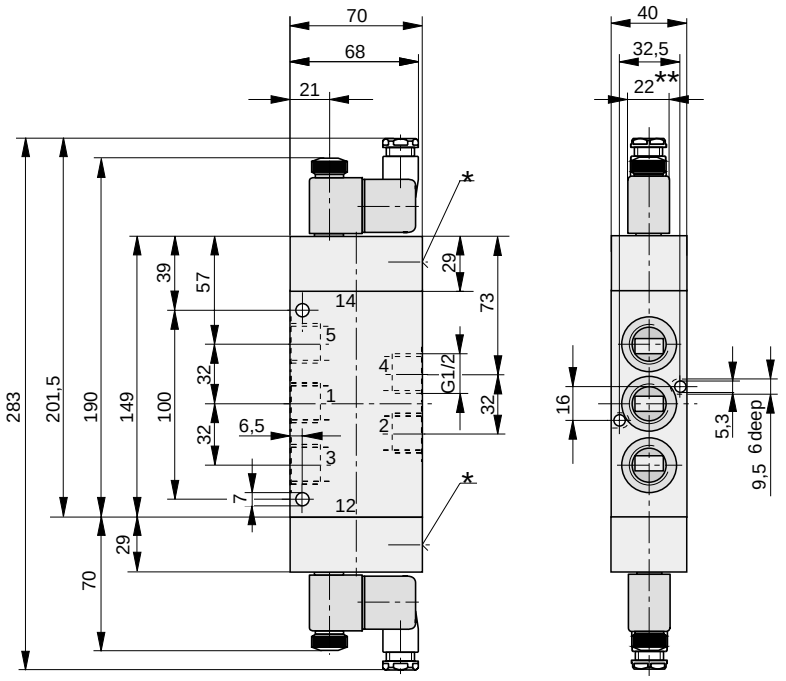

* Manual override
** Solenoid width is 30 mm on ex-proof version and low wattage coil version

Order Instructions

Actuation	Middle position function	Symbol	Order Instructions Type	Order No.
Electrical, by permanent signal, spring return to middle position	Middle position closed	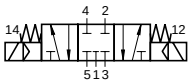	**S9 581RFG-1/2-..**	**PA 16176-..33**
	Middle position exhausted	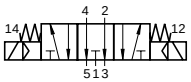	**S9 581RFE-1/2-..**	**PA 16177-..33**
	Middle position pressurized	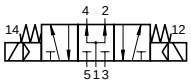	**S9 581RFB-1/2-..**	**PA 16178-..33**

Solenoid version	Nominal voltage	Applicable for	Key code
Standard version	220 V/50 (60) Hz	110 V=	61
	24 V=	48 V/50 (60) Hz	02
Low wattage version	24 V=		13
	220 V/50 (60) Hz		69
Ex-proof version *	24 V=		48
	220 V/50 (60) Hz		98

* For explosion-proof versions different technical requirements apply, according to Declaration of Conformity

Further voltages available on request.

P-Supply Manifolds

for directional valves of the S9-1/2 Series

Series PL.-1/2-..

Dimensions (mm)

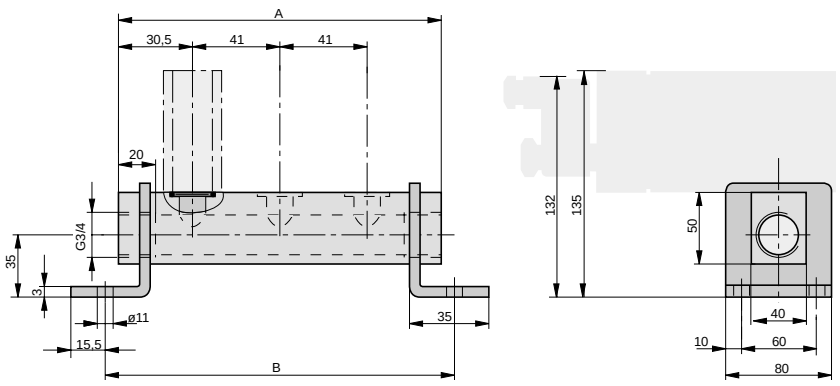

Dimension Table (mm)

Type	No. of valves	A	B
PL-1/2-2	2	102	122
PL-1/2-3	3	143	163
PL-1/2-4	4	184	204

Material

Description	Material
Mounting bracket	Steel, passivated
Screws	Galvanized steel
O-ring	Oil-resist. rubber

Accessories

Description	**Order No.**
Complete cover plate	**PD 39138**
Flow divider	**PD 40012**

P-supply manifolds reduce and simplify tubing. They allow a space-saving and clear, compact design. 3/2, 5/2 and 5/3 directional valves with different types of actuation can be mounted in groups of 2-10 pieces.

The delivery includes:
P-supply manifold
Mounting bracket
Mounting screws
O-rings

Order Instructions and Weight

Order Instructions Type	Order No.	consisting of Manifold	Bracket	Screw	O-ring	Weight (kg)
PL-1/2-2	**PD 39016-0002**	1	2	4	2	0.45
PL-1/2-3	**PD 39016-0003**	1	2	6	3	0.60
PL-1/2-4	**PD 39016-0004**	1	2	8	4	0.80

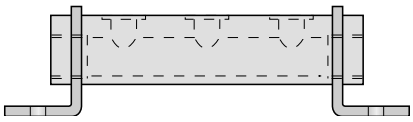

For product group list of directional valves see 3.53.001E

Data Sheet No. 3.53.450E

A1P505E00JX00X

The right to introduce technical modifications is reserved

PNEUMATIC
GROUP

5/2- AND 5/3-WAY VALVES
ISO SIZES 1, 2, 3 – VDMA 01
SERIES S20

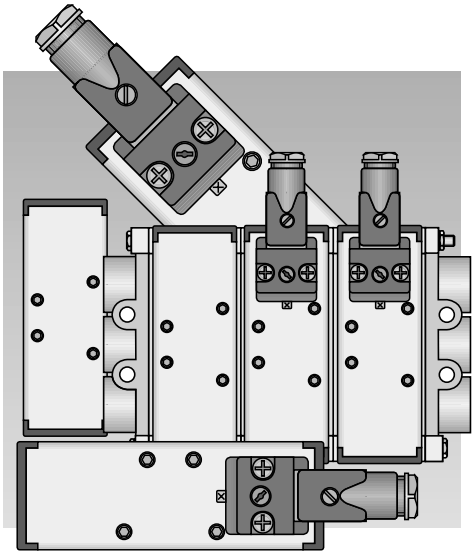

HOERBIGER
ORIGA

5/2 Way Valve

Actuation	Symbol	Order Instructions Type	Order No.	Data Sheet No.
Pneumatic, by permanent signal, spring return	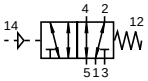	**S20 561RF-01** (VDMA)	**PA 12891**	3.61.050E
		S20 561RF-1	**PA 12869**	3.61.002E
		S20 561RF-2	**PA 16425**	3.61.012E
		S20 561RF-3	**PA 16426**	3.61.022E
Pneumatic, by permanent signal, Air spring return	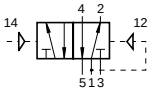	**S20 561R-01** (VDMA)	**PA 12892**	3.61.050E
		S20 561R-1	**PA 12870**	3.61.002E
		S20 561R-2	**PA 16428**	3.61.012E
		S20 561R-3	**PA 16429**	3.61.022E
Pneumatic, by impulse	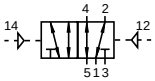	**S20 561-01** (VDMA)	**PA 12893**	3.61.050E
		S20 561-1	**PA 12868**	3.61.002E
		S20 561-2	**PA 16422**	3.61.012E
		S20 561-3	**PA 16423**	3.61.022E
Electrical, by permanent signal, spring return	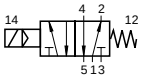	**S20 581RF-01-..** (VDMA)	**PA 12886-..33**	3.61.051E
		S20 581RF-1-..	**PA 12875-..33**	3.61.003E
		S20 581RF-2-..	**PA 16441-..33**	3.61.013E
		S20 581RF-3-..	**PA 16442-..33**	3.61.023E
with external pilot air	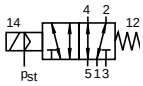	**S20 581S-RF-01-..** (VDMA)	**PA 12896-..33**	3.61.051E
		S20 581S-RF-1-..	**PA 12882-..33**	3.61.003E
		S20 581S-RF-2-..	**PA 16456-..33**	3.61.013E
		S20 581S-RF-3-..	**PA 16462-..33**	3.61.023E
Electrical, by permanent signal, Air spring return	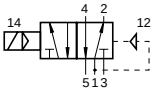	**S20 581R-01-..** (VDMA)	**PA 12887-..33**	3.61.051E
		S20 581R-1-..	**PA 12876-..33**	3.61.003E
		S20 581R-2-..	**PA 16444-..33**	3.61.013E
		S20 581R-3-..	**PA 16445-..33**	3.61.023E
Electrical, by impulse,	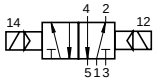	**S20 581-01-..** (VDMA)	**PA 12888-..33**	3.61.051E
		S20 581-1-..	**PA 12874-..33**	3.61.003E
		S20 581-2-..	**PA 16438-..33**	3.61.013E
		S20 581-3-..	**PA 16439-..33**	3.61.023E
with external pilot air	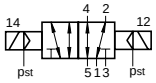	**S20 581S-01-..** (VDMA)	**PA 12898-..33**	3.61.051E
		S20 581S-1-..	**PA 12880-..33**	3.61.003E
		S20 581S-2-..	**PA 16454-..33**	3.61.013E
		S20 581S-3-..	**PA 16460-..33**	3.61.023E

Solenoid version	Nominal voltage	Applicable for	Key code
Standard version	220 V/50 (60) Hz	110 V=	61
	24 V=	48 V/50 (60) Hz	02
Low wattage version	24 V=		13**
	220 V/50 (60) Hz		69**
Ex-proof version *	24 V=		48**
	220 V/50 (60) Hz		98**

* For explosion-proof versions different technical requirements apply, according to Declaration of Conformity

** Only for ISO-valves

Further voltages available on request.

5/3 Way Valve				
Actuation	Symbol	Order Instructions Type	Order No.	Data Sheet No.
Pneumatic, by permanent signal, spring return to middle position	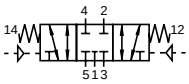	**S20 561RFG-01** (VDMA)	**PA 12894**	3.61.050E
		S20 561RFG-1	**PA 12871**	3.61.002E
		S20 561RFG-2	**PA 16431**	3.61.012E
		S20 561RFG-3	**PA 16432**	3.61.022E
	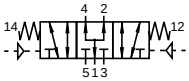	**S20 561RFB-1**	**PA 12873**	3.61.002E
		S20 561RFB-2	**PA 16437**	3.61.012E
	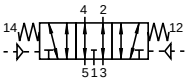	**S20 561RFE-01** (VDMA)	**PA 12895**	3.61.050E
		S20 561RFE-1	**PA 12872**	3.61.002E
		S20 561RFE-2	**PA 16434**	3.61.012E
		S20 561RFE-3	**PA 16435**	3.61.022E
Electrical, by permanent signal, spring return to middle position	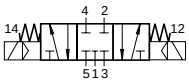	**S20 581RFG-01** (VDMA)	**PA 12889-..33**	3.61.051E
		S20 581RFG-1-..	**PA 12877-..33**	3.61.003E
		S20 581RFG-2-..	**PA 16447-..33**	3.61.013E
		S20 581RFG-3-..	**PA 16448-..33**	3.61.023E
	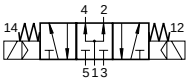	**S20 581RFB-1-..**	**PA 12879-..33**	3.61.003E
		S20 581RFB-2-..	**PA 16453-..33**	3.61.013E
	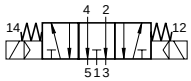	**S20 581RFE-01** (VDMA)	**PA 12890-..33**	3.61.051E
		S20 581RFE-1-..	**PA 12878-..33**	3.61.003E
		S20 581RFE-2-..	**PA 16450-..33**	3.61.013E
		S20 581RFE-3-..	**PA 16451-..33**	3.61.023E
with external pilot air	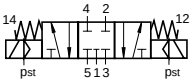	**S20 581S-RFG-01..** (VDMA)	**PA 12900-..33**	3.61.051E
		S20 581S-RFG-1-..	**PA 12883-..33**	3.61.003E
		S20 581S-RFG-2-..	**PA 16457-..33**	3.61.013E
		S20 581S-RFG-3-..	**PA 16463-..33**	3.61.023E
	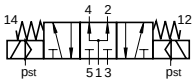	**S20 581S-RFB-1-..**	**PA 12885-..33**	3.61.003E
		S20 581S-RFB-2-..	**PA 16459-..33**	3.61.013E
	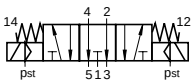	**S20 581S-RFE-01-..** (VDMA)	**PA 12899..33**	3.61.051E
		S20 581S-RFE-1-..	**PA 12884..33**	3.61.003E
		S20 581S-RFE-2-..	**PA 16458..33**	3.61.013E
		S20 581S-RFE-3-..	**PA 16464..33**	3.61.023Es

Solenoid version	Nominal voltage	Applicable for	Key code
Standard version	220 V/50 (60) Hz	110 V=	61
	24 V=	48 V/50 (60) Hz	02
Low wattage version	24 V=		13**
	220 V/50 (60) Hz		69**
Ex-proof version *	24 V=		48**
	220 V/50 (60) Hz		98**

* For explosion-proof versions different technical requirements apply, according to Declaration of Conformity

** Only for ISO-valves

Andere Spannungen auf Anfrage.

5/2 and 5/3 Way Valves

to ISO 5599 Size 1

Actuation:
- **pneumatic, permanent signal**
- **pneumatic, impulse**

Series S20

S20 561RF-1
S20 561R-1
S20 561-1

S20 561RF.-1

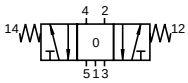

Caracteristics to VDI 3290			Pressures quoted as gauge pressure	
Characteristics	Symbol	Unit	Description	
General Features				
Type			Ceramic spool valve	
Mounting			On base plate, to ISO 5599	
Tube connection			Base plate	
Port size			G1/4 (base plate)	
Weight (mass)		kg	0.32	
Installation			In any position	
Ambient temperature range	ϑ_{min} ϑ_{max}	°C °C	-10 +60	Note: When using below freezing point (°C) it is necessary to consult us.
Medium temperature range	ϑ_{min} ϑ_{max}	°C °C	-10 +60	
Medium			Filtered compressed air	
Lubrication			With or without oil mist lubrication [1]	
Pneumatic Characteristics				
Nominal pressure	p_n	bar	6	
Operating pressure range	p_{min} p_{max}	bar bar	-0.9 12	
			5/2 way valve	5/3 way valve
Nominal flow	Q_N	l/min	1380	1380
Actuation				
Pneumatic			Direct	
Actuation pressure range	$p_{st\,min}$	bar	2	
	$p_{st\,max}$	bar	12	

[1] We recommended the use of mineral oil type VG32 to ISO 3448

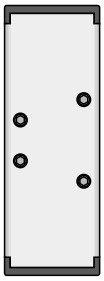

Comprises:
1 valve with mounting screws
1 gasket

A1P600E00JAA00X

The right to introduce technical modifications is reserved

For product group list see 3.61.001E
For base plates see 3.69.029E

Dimensions (mm)

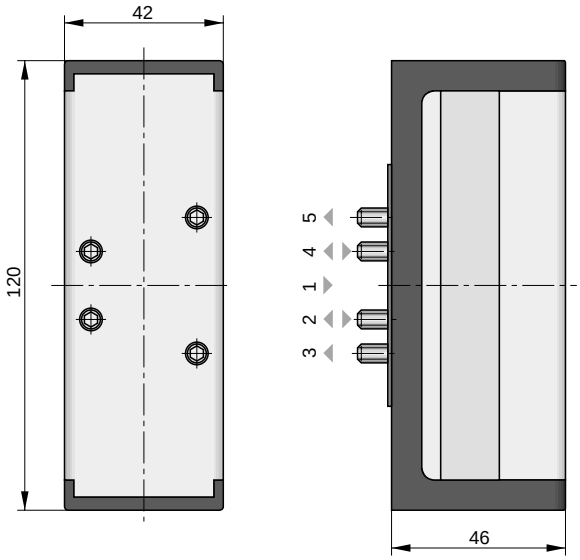

Order Instructions

Actuation	Return	Symbol	Order Instructions Type	Order No.
Pneumatic, by permanent signal	Spring return	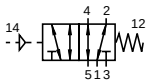	**S20 561RF-1**	**PA 12869**
Pneumatic, by permanent signal	Pneumatic (Air spring return)	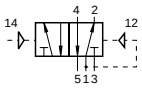	**S20 561R-1**	**PA 12870**
Pneumatic, by impulse	Pneumatic, by impulse	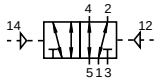	**S20 561-1**	**PA 12868**
Pneumatic, by permanent signal spring return to middle position	Middle position closed	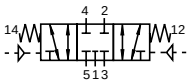	**S20 561RFG-1**	**PA 12871**
	Middle position pressurized	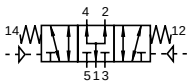	**S20 561RFB-1**	**PA 12873**
	Middle position vented	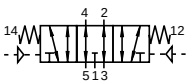	**S20 561RFE-1**	**PA 12872**

5/2 and 5/3 Way Valves

to ISO 5599 Size 1

Caracteristics to VDI 3290			Pressures quoted as gauge pressure	
Characteristics	Symbol	Unit	Description	
General Features				
Type			Ceramic spool valve	
Mounting			On base plate, to ISO 5599	
Tube connection			Base plate	
Port size			G1/4 (base plate)	
Weight (mass)		kg	0.46 permanent signal 0.59 impulse	
Installation			In any position	
Ambient temperature range	ϑ_{min} ϑ_{max}	°C °C	-10 +60	Note: For use below freezing point (0 °C) please consult us
Medium temperature range	ϑ_{min} ϑ_{max}	°C °C	-10 +60	
Medium			Filtered compressed air	
Lubrication			With or without oil mist lubrication [1]	
Pneumatic Characteristics				
Nominal pressure	p_n	bar	6	
Operating pressure range**	p_{min}	bar	2	
			-1 (Version S)	
	p_{max}	bar	12	
			5/2 way valve	5/3 way valve
Nominal flow	Q_N	l/min	1380	1380
Actuation				
Electrical			Pilot operated, pilot operated with external pilot air	
Actuation pressure range**	$p_{st\ min}$	bar	2	
	$p_{st\ max}$	bar	10	
Voltage type			AC	DC
Nominal voltage* – Standard version	U_n	V	220	24
Nominal voltage* – Low watt. version	U_n	V	220	24
Nominal voltage* – Ex-proof version [3]	U_n	V	220	24
			Further voltages available on request	
Initial power consumption – Standard version		VA (W)	11	4.8
Initial power consumption – Low watt. version		VA (W)	7.8	2.7
Initial power consumption – Ex-proof version [3]		VA (W)	5	5.1
Continuous consumption – Standard version		VA (W)	8.5	4.8
Continuous consumption – Low watt. version		VA (W)	4.9	2.7
Continuous consumption – Ex-proof version [3]		VA (W)	5	5.1
Duty cycle	ED	%	100	
Electrical protection			IP65 to DIN 40050 (with plug) or EEx-Mii-T5 *	
Insulating material			F (Ex-version E) to VDE 0580	
Connection			Plug to DIN 43650 form B – industrial standard [2] Ex-version: cable 1200 mm long	

* See Order Instructions for details
** 16 bar version available on request
[1] We recommend the use of mineral oil type VG32 to ISO 3448
[2] Plug for low wattage version available in DIN 43650 form A
[3] For explosion-proof versions different technical requirements apply, according to Declaration of Conformity

For **product group overview** see 3.61.001E
For **base plates** see 3.69.028E, 3.69.029E

Data Sheet No. 3.61.003E-1

Actuation:
Electrical, pilot operated with standard solenoids
- by permanent signal
- by impulse

Series S20

S20 581 RF-1..
S20 581 R-1..
S20 581-1..
S20 581S-1..

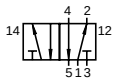

S20 581 RF.-1..

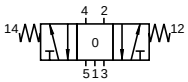

S20 581 S-RF.-1..

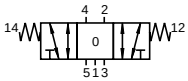

Special Version:
– with central connector on request

Comprises:
1 valve with mounting screws
1 gasket

HOERBIGER ORIGA

A1P601E00JAA00X

The right to introduce technical modifications is reserved

Dimensions (mm)

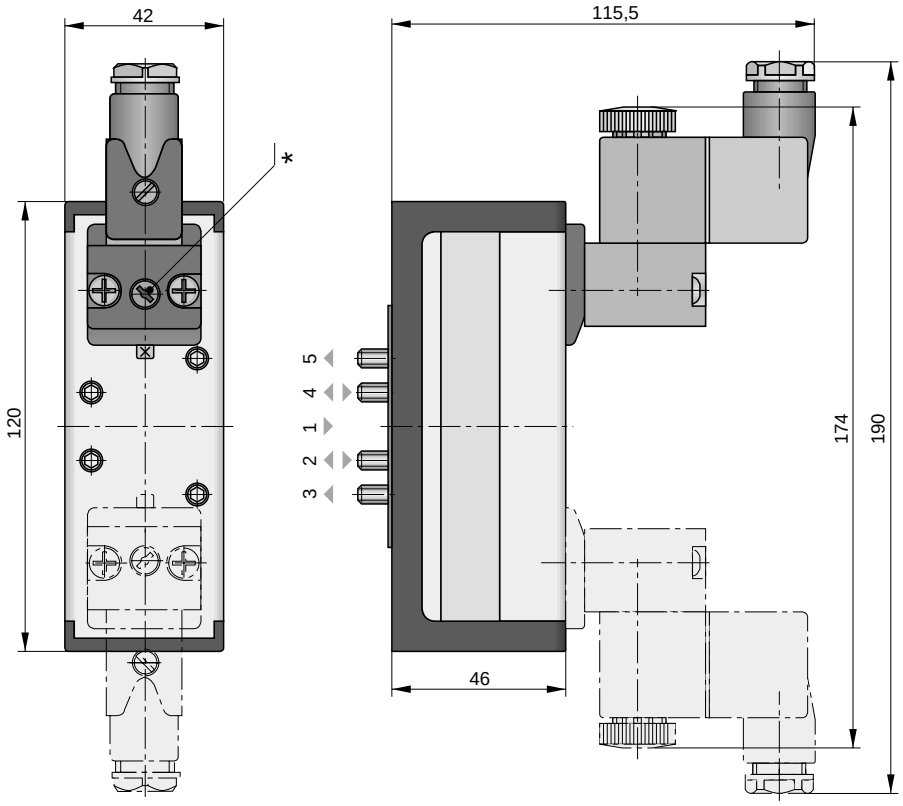

* Manual actuation

Dimensions (mm)
Low wattage solenoid

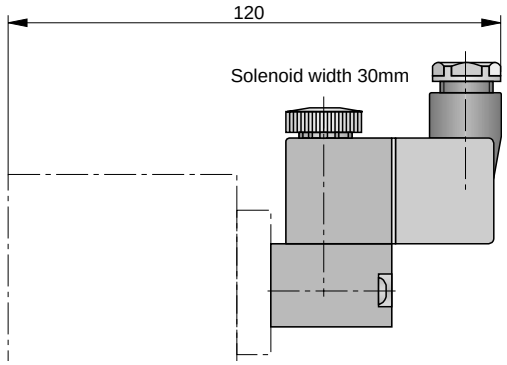

Dimensions (mm)
Ex-proof solenoid

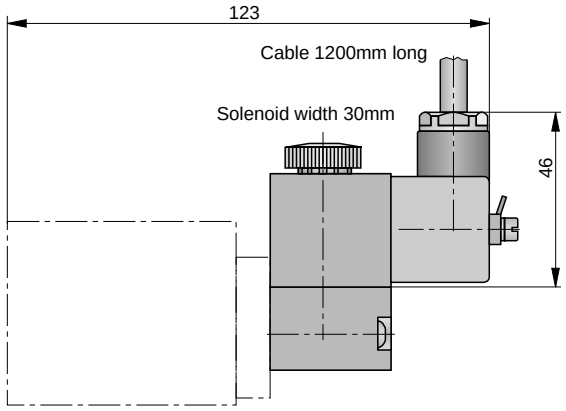

Order Instructions

Actuation	Return	Symbol	Order Instructions Type	Order No.
Electrical, by permanent signal	Spring return	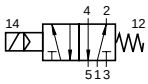	**S20 581RF-1-..**	**PA 12875-..33**
With external pilot air	Spring return	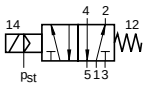	**S20 581S-RF-1-..**	**PA 12882-..33**
Electrical, by permanent signal	Pneumatic (Air spring return)	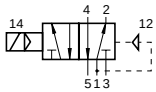	**S20 581R-1-..**	**PA 12876-..33**
Electrical, by impulse	Electrical, by impulse	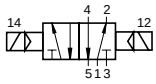	**S20 581-1-..**	**PA 12874-..33**
With external pilot air	With external pilot air	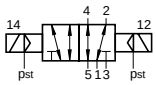	**S20 581S-1-..**	**PA 12880-..33**
Electrical, by permanent signal spring return to middle position	Middle position closed	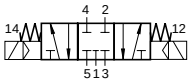	**S20 581RFG-1-..**	**PA 12877-.. 33**
	Middle position pressurized	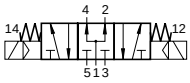	**S20 581RFB-1-..**	**PA 12879-..33**
	Middle position vented	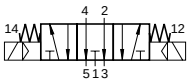	**S20 581RFE-1-..**	**PA 12878-.. 33**
With external pilot air	Middle position closed	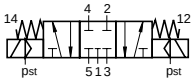	**S20 581S-RFG-1-..**	**PA 12883-..33**
	Middle position pressurized	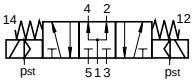	**S20 581S-RFB-1-..**	**PA 12885-..33**
	Middle position vented	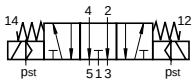	**S20 581S-RFE-1-..**	**PA 12884-..33**

Solenoid version	Nominal voltage	Applicable for	Key code
Standard version	220 V/50 (60) Hz	110 V=	61
	24 V=	48 V/50 (60) Hz	02
Low wattage version	24 V=		13
	220 V/50 (60) Hz		69
Ex-proof version *	24 V=		48
	220 V/50 (60) Hz		98

* For explosion-proof versions different technical requirements apply, according to Declaration of Conformity

Further voltages available on request.

5/2 and 5/3 Way Valves

to ISO 5599 Size 2

Actuation:
- **pneumatic, permanent signal**
- **pneumatic, impulse**

Series S20

S20 561RF-2
S20 561R-2
S20 561-2

S20 561RF.-2

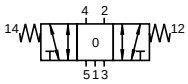

Caracteristics to VDI 3290			Pressures quoted as gauge pressure	
Characteristics	Symbol	Unit	Description	
General Features				
Type			Ceramic spool valve	
Mounting			On base plate, to ISO 5599	
Tube connection			Base plate	
Port size			G3/8 (base plate)	
Weight (mass)		kg	0.56	
Installation			In any position	
Ambient temperature range	ϑ_{min} ϑ_{max}	°C °C	-10 +60	Note: For use below freezing point (0 °C) please consult us
Medium temperature range	ϑ_{min} ϑ_{max}	°C °C	-10 +60	
Medium			Filtered compressed air	
Lubrication			With or without oil mist lubrication [1]	
Pneumatic Characteristics				
Nominal pressure	p_n	bar	6	
Operating pressure range	p_{min} p_{max}	bar bar	-0.9 12	
			5/2 way valve	5/3 way valve
Nominal flow	Q_N	l/min	3720	3720
Actuation				
Pneumatic			Direct	
Actuation pressure range	$p_{st\ min}$	bar	2	
	$p_{st\ max}$	bar	12	

[1] We recommended the use of mineral oil type VG32 to ISO 3448

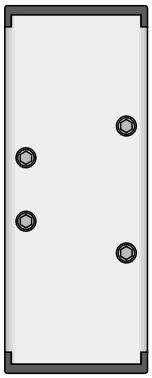

Comprises:
1 valve with mounting screws
1 gasket

A1P602E00JAA00X

The right to introduce technical modifications is reserved

For **product group overview** see 3.61.001E
For **base plates** see 3.69.028E, 3.69.029E

Dimensions (mm)

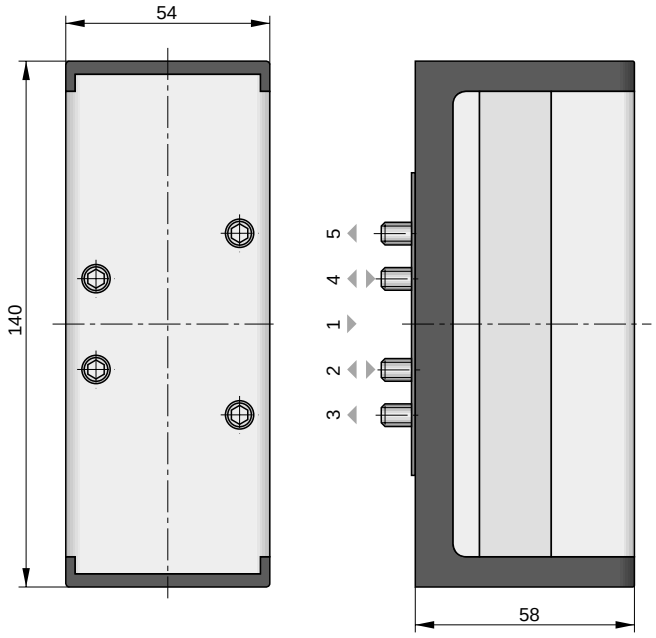

Order Instructions

Actuation	Return	Symbol	Order Instructions Type	Order No.
Pneumatic, by permanent signal	Spring return	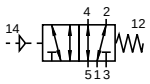	**S20 561RF-2**	**PA 16425**
Pneumatic, by permanent signal	Pneumatic (Air spring return)	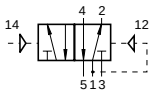	**S20 561R-2**	**PA 16428**
Pneumatic, by impulse	Pneumatic, by impulse	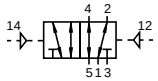	**S20 561-2**	**PA 16422**
Pneumatic, by permanent signal spring return to middle position	Middle position closed	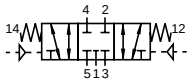	**S20 561RFG-2**	**PA 16431**
	Middle position pressurized	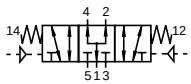	**S20 561RFB-2**	**PA 16437**
	Middle position vented	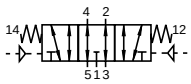	**S20 561RFE-2**	**PA 16434**

5/2 and 5/3 Way Valves

to ISO 5599 Size 2

Caracteristics to VDI 3290			Pressures quoted as gauge pressure	
Characteristics	Symbol	Unit	Description	
General Features				
Type			Ceramic spool valve	
Mounting			On base plate, to ISO 5599	
Tube connection			Base plate	
Port size			G3/8 (base plate)	
Weight (mass)		kg	0.70 permanent signal 0.83 impulse	
Installation			In any position	
Ambient temperature range	ϑ_{min} ϑ_{max}	°C °C	-10 +60	Note: For use below freezing point (0 °C) please consult us
Medium temperature range	ϑ_{min} ϑ_{max}	°C °C	-10 +60	
Medium			Filtered compressed air	
Lubrication			With or without oil mist lubrication [1]	
Pneumatic Characteristics				
Nominal pressure	p_n	bar	6	
Operating pressure range**	p_{min}	bar	2	
			-1 (Version S)	
	p_{max}	bar	12	
			5/2 way valve	5/3 way valve
Nominal flow	Q_N	l/min	3720	3720
Actuation				
Electrically			Pilot operated, Pilot operated with external pilot air	
Actuation pressure range**	$p_{st\ min}$	bar	2	
	$p_{st\ max}$	bar	12	
Voltage type			AC	DC
Nominal voltage* – Standard version	U_n	V	220	24
Nominal voltage* – Low watt. version	U_n	V	220	24
Nominal voltage* – Ex-proof version [3]	U_n	V	220	24
			Further voltages available on request	
Initial power consumption – Standard version		VA (W)	11	4.8
Initial power consumption – Low watt. version		VA (W)	7.8	2.7
Initial power consumption – Ex-proof version [3]		VA (W)	5	5.1
Continuous consumption – Standard version		VA (W)	8.5	4.8
Continuous consumption – Low watt. version		VA (W)	4.9	2.7
Continuous consumption – Ex-proof version [3]		VA (W)	5	5.1
Duty cycle	ED	%	100	
Electrical protection			IP65 to DIN 40050 (with plug) or EEx-Mii-T5 *	
Insulating material			F (Ex-version E) to VDE 0580	
Connection			Plug to DIN 43650 form B – industrial standard [2] Ex-version: cable 1.200 mm long	

* See Order Instructions for details
** 16 bar version available on request
[1] We recommended the use of mineral oil type VG32 to ISO 3448
[2] Plug for low watt execution available in DIN 43650 form A
[3] For explosion-proof versions different technical requirements apply, according to Declaration of Conformity

For **product group overview** see 3.61.001E
For **base plates** see 3.69.028E, 3.69.029E

Data Sheet No. 3.61.013E-1

Actuation:
Electrical pilot operated with standard solenoids
- by permanent signal
- by impulse

Series S20

S20 581RF-2..
S20 581R-2..
S20 581-2..
S20 581S-2..

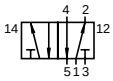

S20 581 RF.-2..

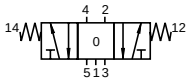

S20 581 S-RF.-2..

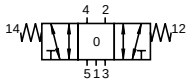

Special Version:
– with central connector on request

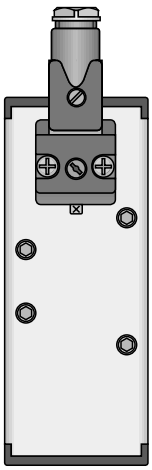

Comprises:
1 valve with mounting screws
1 gasket

HOERBIGER ORIGA

A1P603E00JAA00X

The right to introduce technical modifications is reserved

Dimensions (mm)

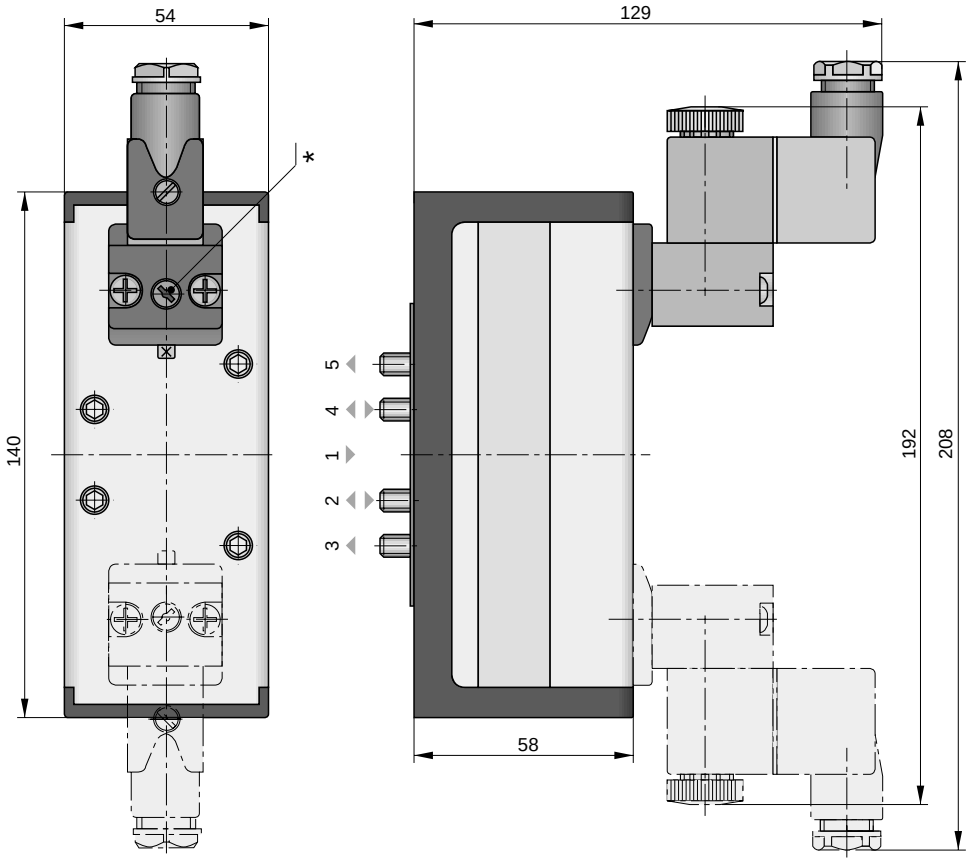

* Manual actuation

Dimensions (mm)
Low wattage solenoid

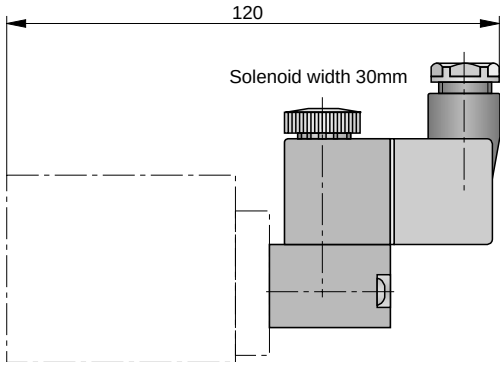

Dimensions (mm)
Ex-proof solenoid

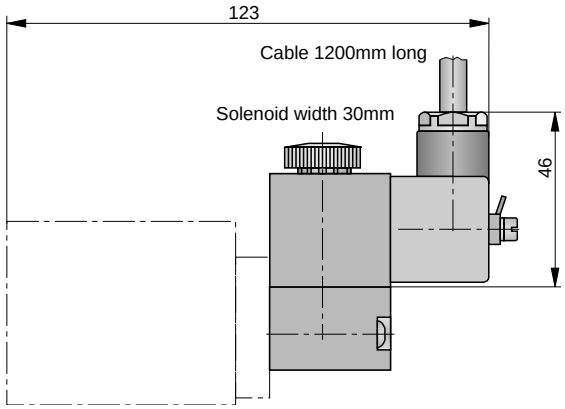

Order Instructions

Actuation	Return	Symbol	Order Instructions Type	Order No.
Electrical, by permanent signal	Spring return	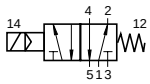	**S20 581RF-2-..**	**PA 16441-..33**
With external pilot air	Spring return	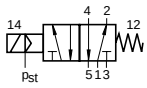	**S20 581S-RF-2-..**	**PA 16456-..33**
Electrical, by permanent signal	Pneumatic (Air spring return)	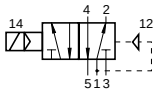	**S20 581R-2-..**	**PA 16444-..33**
Electrical, by impulse	Electrical, by impulse	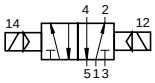	**S20 581-2-..**	**PA 16438-..33**
With external pilot air	With external pilot air	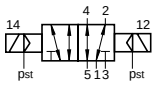	**S20 581S-2-..**	**PA 16454-..33**
Electrical, by permanent signal spring return to middle position	Middle position closed	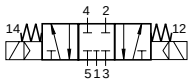	**S20 581RFG-2-..**	**PA 16447-.. 33**
	Middle position pressurized	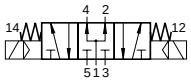	**S20 581RFB-2-..**	**PA 16453-..33**
	Middle position vented	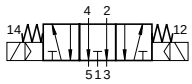	**S20 581RFE-2-..**	**PA 16450-.. 33**
With external pilot air	Middle position closed	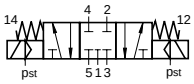	**S20 581S-RFG-2-..**	**PA 16457-..33**
	Middle position pressurized	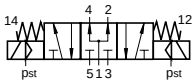	**S20 581S-RFB-2-..**	**PA 16459-..33**
	Middle position vented	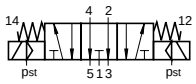	**S20 581S-RFE-2-..**	**PA 16458-..33**

Solenoid version	Nominal voltage	Applicable for	Key code
Standard version	220 V/50 (60) Hz	110 V=	61
	24 V=	48 V/50 (60) Hz	02
Low wattage version	24 V=		13
	220 V/50 (60) Hz		69
Ex-proof version *	24 V=		48
	220 V/50 (60) Hz		98

* For explosion-proof versions different technical requirements apply, according to Declaration of Conformity

Further voltages available on request.

5/2 and 5/3 Way Valves

to ISO 5599 Size 3

Actuation:
- pneumatic, permanent signal
- pneumatic, impulse

Series S20

S20 561RF-3
S20 561R-3
S20 561-3

S20 561RF.-3

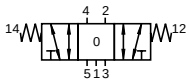

Caracteristics to VDI 3290			Pressures quoted as gauge pressure	
Characteristics	Symbol	Unit	Description	
General Features				
Type			Ceramic spool valve	
Mounting			On base plate, to ISO 5599	
Tube connection			Base plate	
Port size			G1/2 (base plate)	
Weight (mass)		kg	1.1	
Installation			In any position	
Ambient temperature range	ϑ_{min} ϑ_{max}	°C °C	-10 +60	Note: For use below freezing
Medium temperature range	ϑ_{min}	°C	-10	point (0 °C) please consult us
Medium			Filtered compressed air	
Lubrication			With or without oil mist lubrication [1]	
Pneumatic Characteristics				
Nominal pressure	p_n	bar	6	
Operating pressure range	p_{min} p_{max}	bar bar	-0.9 12	
			5/2 way valve	5/3 way valve
Nominal flow	Q_N	l/min	6660	6660
Actuation				
Pneumatic			Direct	
Actuation pressure range	$p_{st\ min}$	bar	2	
	$p_{st\ max}$	bar	12	

[1] We recommended the use of mineral oil type VG32 to ISO 3448

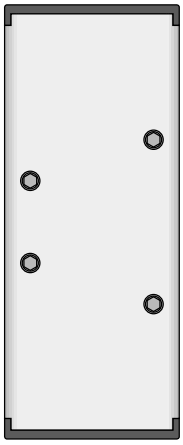

Comprises:
1 valve with mounting screws
1 gasket

A1P604E00JAA00X

The right to introduce technical modifications is reserved

For **product group overview** see 3.61.001E
For **base plates** see 3.69.028E, 3.69.029E

Dimensions (mm)

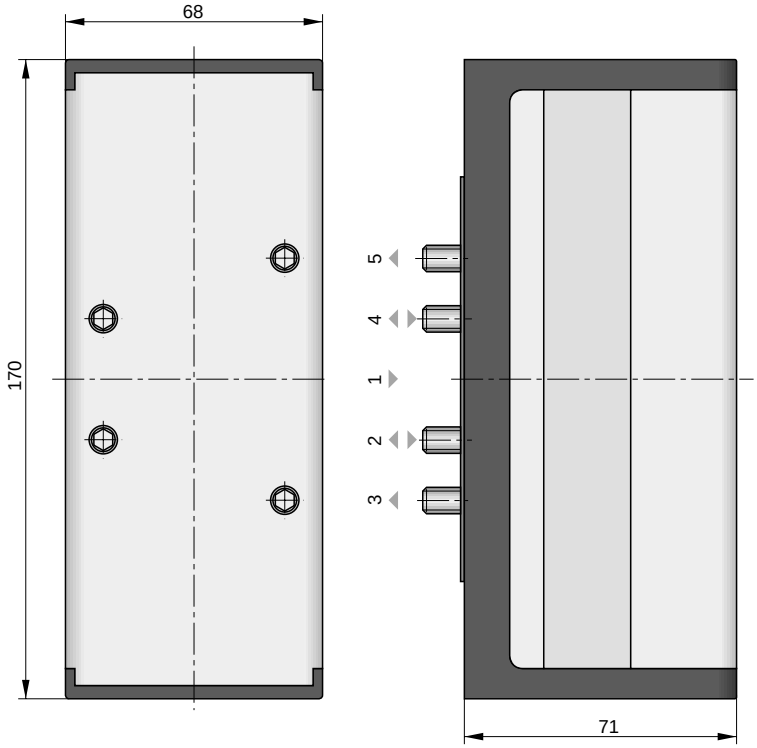

Order Instructions

Actuation	Return	Symbol	Order Instructions Type	Order No.
Pneumatic, by permanent signal	Spring return	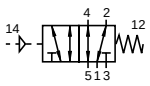	**S20 561RF-3**	**PA 16426**
Pneumatic, by permanent signal	Pneumatic (Air spring return)	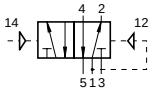	**S20 561R-3**	**PA 16429**
Pneumatic, by impulse	Pneumatic, by impulse	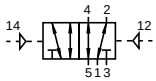	**S20 561-3**	**PA 16423**
Pneumatic, by permanent signal spring return to middle position	Middle position closed	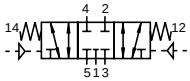	**S20 561RFG-3**	**PA 16432**
	Middle position vented	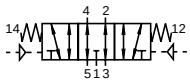	**S20 561RFE-3**	**PA 16435**

5/2 and 5/3 Way Valves

to ISO 5599 Size 3

Actuation:
Electrical pilot operated with standard solenoids
- by permanent signal
- by impulse

Series S20

S20 581RF-3..
S20 581R-3..
S20 581-3..
S20 581S-3..

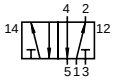

S20 581 RF.-3..

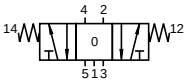

S20 581 S-RF.-3..

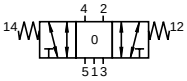

Special Version:
– with central connector on request

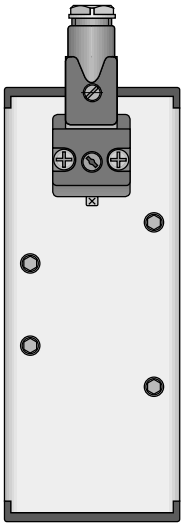

Comprises:
1 valve with mounting screws
1 gasket

Caracteristics to VDI 3290			Pressures quoted as gauge pressure	
Characteristics	Symbol	Unit	Description	
General Features				
Type			Ceramic spool valve	
Mounting			On base plate, to ISO 5599	
Tube connection			Base plate	
Port size			G1/2 (base plate)	
Weight (mass)		kg	1.23 permanent signal 1.37 impulse	
Installation			In any position	
Ambient temperature range	ϑ_{min} ϑ_{max}	°C °C	-10 +60	Note: For use below freezing point (0 °C) please consult us
Medium temperature range	ϑ_{min} ϑ_{max}	°C °C	-10 +60	
Medium			Filtered compressed air	
Lubrication			With or without oil mist lubrication [1]	
Pneumatic Characteristics				
Nominal pressure	p_n	bar	6	
Operating pressure range**	p_{min}	bar	2	
			-1 (Version S)	
	p_{max}	bar	12	
			5/2 way valve	5/3 way valve
Nominal flow	Q_N	l/min	6660	6660
Actuation				
Electrically			Pilot operated, Pilot operated with external pilot air	
Actuation pressure range**	$p_{st\ min}$	bar	2	
	$p_{st\ max}$	bar	10	
Voltage type			AC	DC
Nominal voltage* – Standard version	U_n	V	220	24
Nominal voltage* – Low watt. version	U_n	V	220	24
Nominal voltage* – Ex-proof version [3]	U_n	V	220	24
			Further voltages available on request	
Initial power consumption – Standard version		VA (W)	11	4.8
Initial power consumption – Low watt. version		VA (W)	7.8	2.7
Initial power consumption – Ex-proof version [3]		VA (W)	5	5.1
Continuous consumption – Standard version		VA (W)	8.5	4.8
Continuous consumption – Low watt. version		VA (W)	4.9	2.7
Continuous consumption – Ex-proof version [3]		VA (W)	5	5.1
Duty cycle	ED	%	100	
Electrical protection			IP65 to DIN 40050 (with plug) or EEx-Mii-T5 *	
Insulating material			F (Ex-version E) to VDE 0580	
Connection			Plug to DIN 43650 form B – industrial standard [2] Ex-version: cable 1.200 mm long	

* See Order Instructions for details
** 16 bar version available on request
[1] We recommended the use of mineral oil type VG32 to ISO 3448
[2] Plug for low watt execution available in DIN 43650 form A
[3] For explosion-proof versions different technical requirements apply, according to Declaration of Conformity

For **product group overview** see 3.61.001E
For **base plates** see 3.69.028E, 3.69.029E

A1P605E00JAA00X

The right to introduce technical modifications is reserved

HOERBIGER ORIGA

Dimensions (mm)

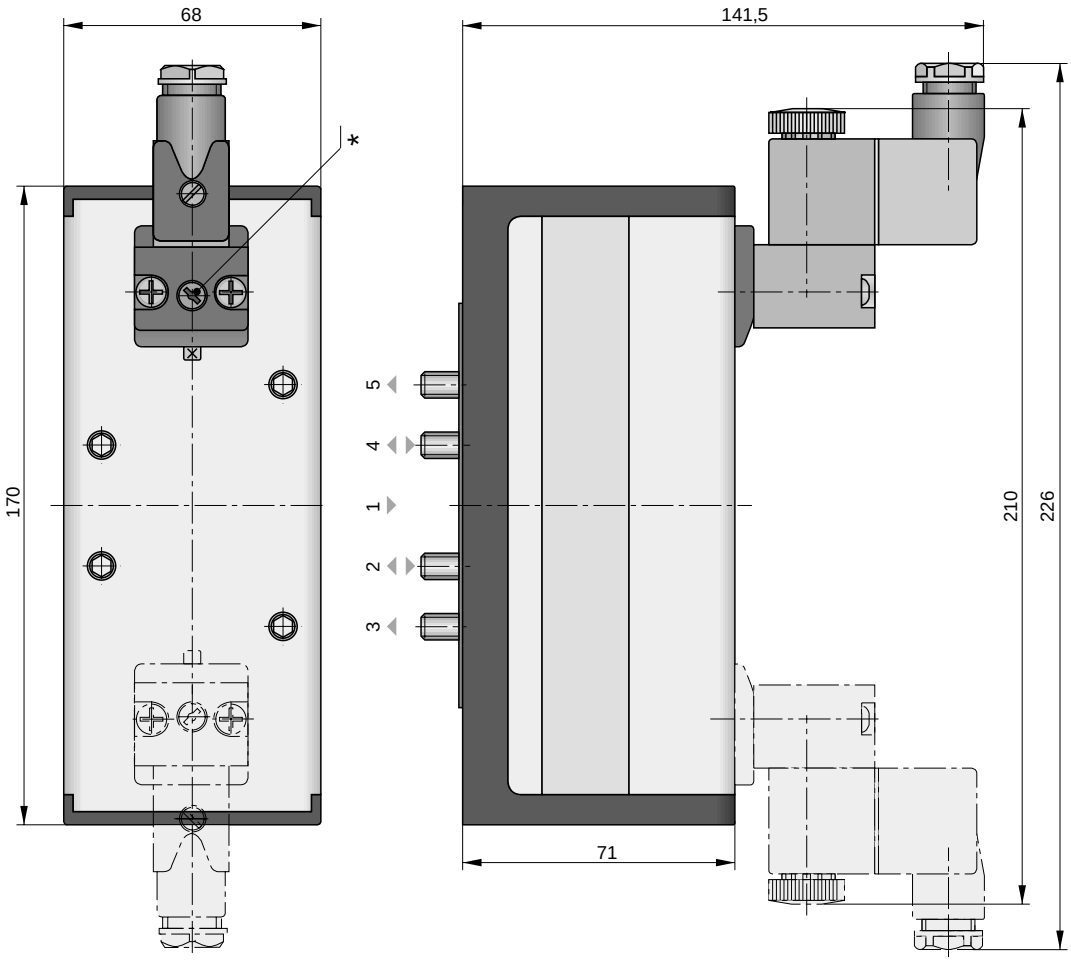

* Manual actuation

Dimensions (mm)
Low wattage solenoid

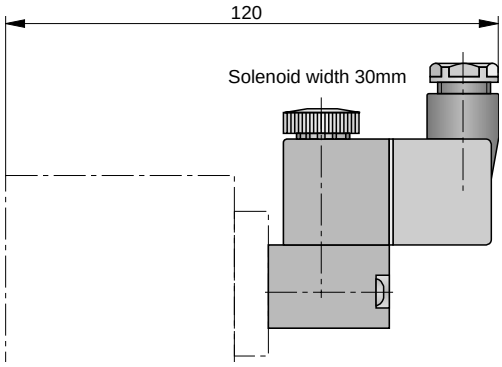

Dimensions (mm)
Ex-proof solenoid

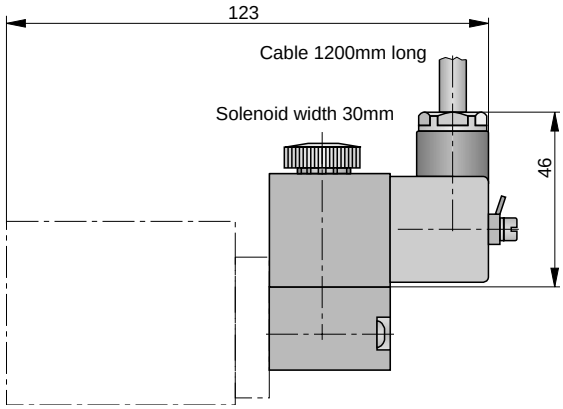

Order Instructions

Actuation	Return	Symbol	Order Instructions Type	Order No.
Electrical, by permanent signal	Spring return	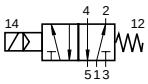	**S20 581RF-3-..**	**PA 16442-..33**
With external pilot air	Spring return	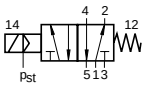	**S20 581S-RF-3-..**	**PA 16462-..33**
Electrical, by permanent signal	Pneumatic (Air spring return	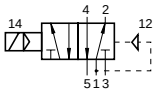	**S20 581R-3-..**	**PA 16445-..33**
Electrical, by impulse	Electrical, by impulse	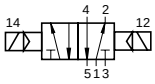	**S20 581-3-..**	**PA 16439-..33**
With external pilot air	With external pilot air	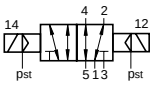	**S20 581S-3-..**	**PA 16460-..33**
Electrical, by permanent signal spring return to middle position	Middle position closed	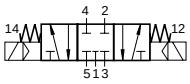	**S20 581RFG-3-..**	**PA 16463-.. 33**
	Middle position vented	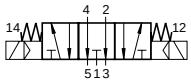	**S20 581RFE-3-..**	**PA 16435- ..33**
With external pilot air	Middle position closed	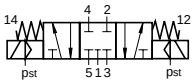	**S20 581S-RFG-3-..**	**PA 16463-..33**
	Middle position vented	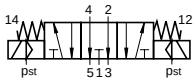	**S20 581S-RFE-3-..**	**PA 16464-..33**

Solenoid version	Nominal voltage	Applicable for	Key code
Standard version	220 V/50 (60) Hz	110 V=	61
	24 V=	48 V/50 (60) Hz	02
Low wattage version	24 V=		13
	220 V/50 (60) Hz		69
Ex-proof version *	24 V=		48
	220 V/50 (60) Hz		98

* For explosion-proof versions different technical requirements apply, according to Declaration of Conformity

Further voltages available on request.

5/2 and 5/3 Way Valves

to VDMA 24563 Size 01

Caracteristics to VDI 3290			Pressures quoted as gauge pressure
Characteristics	Symbol	Unit	Description
General Features			
Type			Ceramic spool valve
Mounting			On base plate, to VDMA 24563
Tube connection			Base plate
Port size			G1/8 or G1/4 (base plate)
Weight (mass)		kg	0.150
Installation			In any position
Ambient temperature range	ϑ_{min} ϑ_{max}	°C °C	-10 +60
Medium temperature range	ϑ_{min} ϑ_{max}	°C °C	-10 +55
			Note: When using below freezing point (°C) it is necessary to consult us.
Medium			Filtered compressed air
Lubrication			With or without oil mist lubrication [1]
Pneumatic Characteristics			
Nominal pressure	p_n	bar	6
Operating pressure range	p_{min} p_{max}	bar bar	-0.9 10
Nominal flow	Q_N	l/min	900
Actuation			
Pneumatic			Direct
Actuation pressure range	$p_{st\ min}$	bar	2
	$p_{st\ max}$	bar	10

[1] We recommended the use of mineral oil type VG32 to ISO 3448

Actuation:
- **pneumatic, by permanent signal**
- **pneumatic, by impulse**

Series S20

S20 561RF-01
S20 561R-01
S20 561-01

S20 561RF.-01

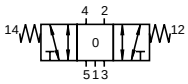

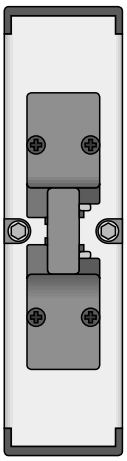

Comprises:
1 valve with mounting screws
1 gasket

For product group list see 3.61.001E
For base plates see 3.69.030E, 3.69.031E

Data Sheet No. 3.61.050E-1

A1P606E00JAA00X

The right to introduce technical modifications is reserved

Dimensions (mm)

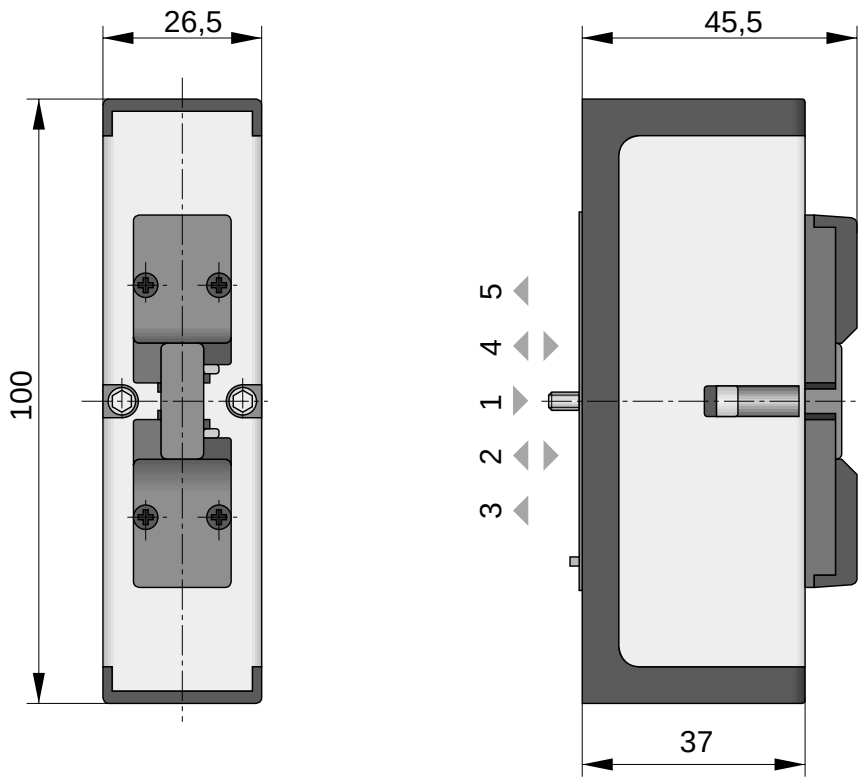

Order Instructions

Actuation	Return	Symbol	Order Instructions Type	Order No.
Pneumatic, by permanent signal	Spring return	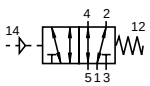	**S20 561RF-01**	**PA 12891**
Pneumatic, by permanent signal	Pneumatic (Air spring return)	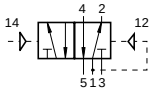	**S20 561R-01**	**PA 12892**
Pneumatic, by impulse	Pneumatic, by impulse	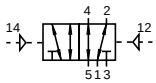	**S20 561-01**	**PA 12893**
Pneumatic, by permanent signal spring return to middle position	Middle position closed	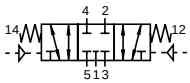	**S20 561RFG-01**	**PA 12894**
	Middle position vented	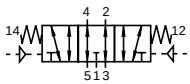	**S20 561RFE-01**	**PA 12895**

5/2 and 5/3 Way Valves

to VDMA 24563 Size 01

Actuation:
Electrical pilot operated
- by permanent signal
- by impulse

Series S20

S20 581RF-01
S20 581R-01
S20 581-01
S20 581S-01

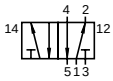

S20 581 RF.-01

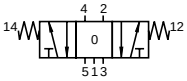

S20 581 S-RF.-01

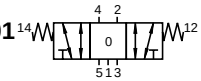

Caracteristics to VDI 3290			Pressures quoted as gauge pressure	
Characteristics	Symbol	Unit	Description	
General Features				
Type			Ceramic spool valve	
Mounting			On base plate, to VDMA 24563	
Tube connection			Base plate	
Port size			G1/8 or G1/4 (base plate)	
Weight (mass)		kg	0.250 permanent signal 0.270 impulse	
Installation			In any position	
Ambient temperature range	ϑ_{min} ϑ_{max}	°C °C	-10 +60	Note: When using below freezing point (°C) it is necessary to consult us.
Medium temperature range	ϑ_{min} ϑ_{max}	°C °C	-10 +55	
Medium			Filtered compressed air	
Lubrication			With or without oil mist lubrication [1]	
Pneumatic Characteristics				
Nominal pressure	p_n	bar	6	
Operating pressure range	p_{min}	bar	2	
			-0.9 (Version S)	
	p_{max}	bar	10	
Nominal flow	Q_N	l/min	900	
Actuation				
Electrically			Pilot operated, Pilot operated with external pilot air	
Actuation pressure range	$p_{st\,min}$	bar	2	
	$p_{st\,max}$	bar	10	
Voltage type			AC	DC
Nominal voltage *	U_n	V	230 Further voltages available on request	24
Continuous consumption		VA (W)	2	2
Initial power consumption	ED	%	100	
Electrical protection			IP65 to DIN 40050 (with plug) or EEx-Mii-T5 *	
Insulating material			F (Ex-version E) to VDE 0580	
Connection			Plug to DIN 43650 form C	

* See Order Instructions for details
[1] We recommended the use of mineral oil type VG32 to ISO 3448

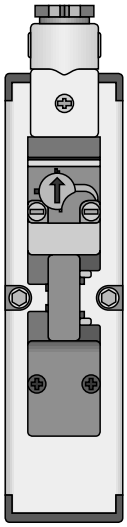

Comprises:
1 valve with mounting screws
1 gasket

For product group list see 3.61.001E
For base plates see 3.69.030E, 3.69.031E

Data Sheet No. 3.61.051E-1

A1P607E00JAA00X

The right to introduce technical modifications is reserved

Dimensions (mm)

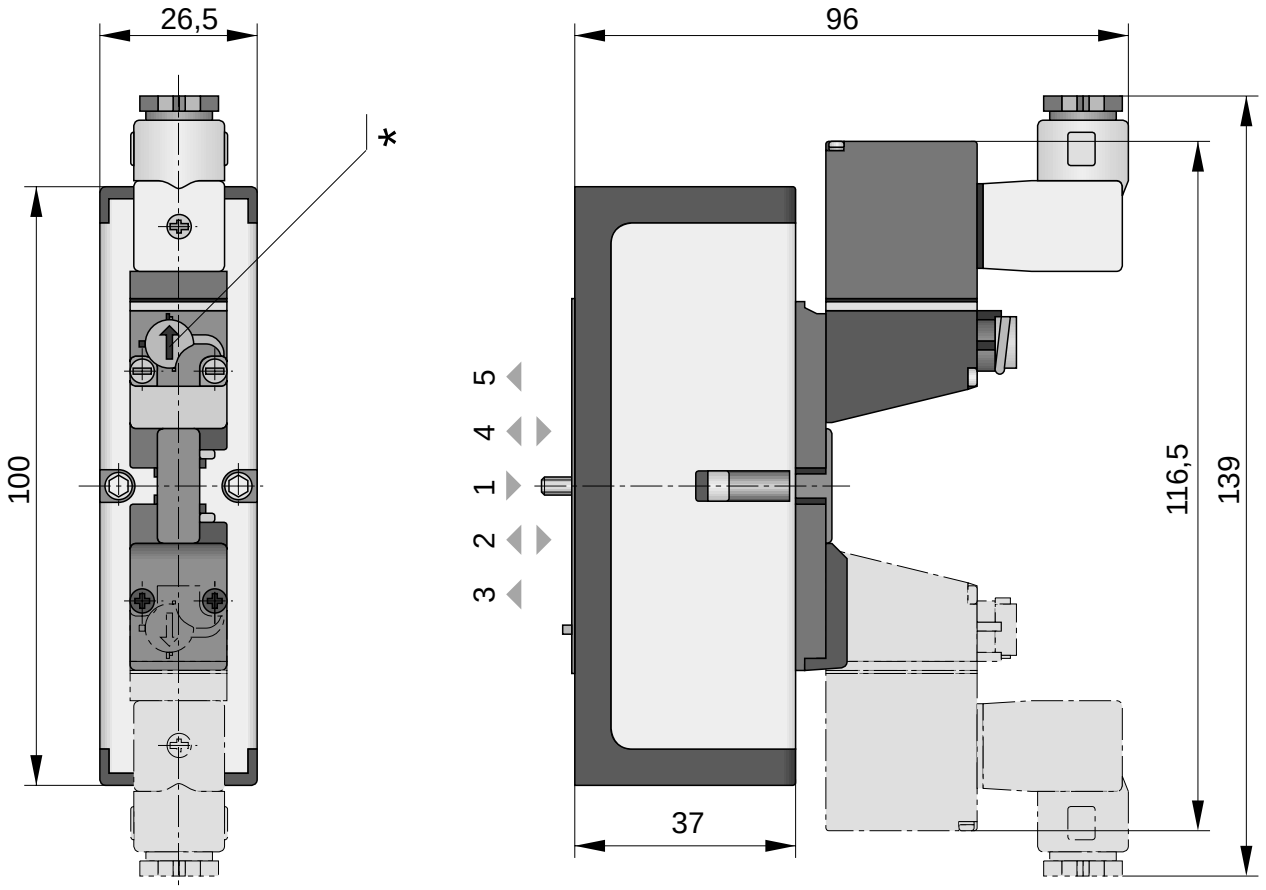

* Manual actuation

Order Instructions

Actuation	Return	Symbol	Order Instructions Type	Order No.
Electrical, by permanent signal	Spring return	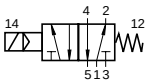	**S20 581RF-01-..**	**PA 12886-..33**
with external pilot air	Spring return	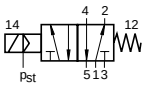	**S20 581S-RF-01-..**	**PA 12896-..33**
Electrical, by permanent signal	Pneumatic (Air spring return)	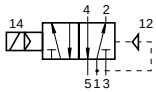	**S20 581R-01-..**	**PA 12887-..33**
Electrical, by impulse	Electrical, by impulse	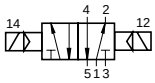	**S20 581-01-..**	**PA 12888-..33**
with external pilot air	with external pilot air	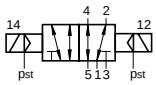	**S20 581S-01-..**	**PA 12898-..33**
Electrical, by permanent signal spring return to middle position	Middle position closed	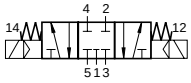	**S20 581RFG-01-..**	**PA 12889-.. 33**
	Middle position vented	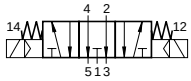	**S20 581RFE-01-..**	**PA 12890- ..33**
with external pilot air	Middle position closed	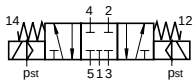	**S20 581S-RFG-01-..**	**PA 12900-..33**
	Middle position vented	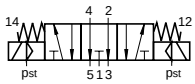	**S20 581S-RFE-01-..**	**PA 12899-..33**

Solenoid version	Nominal voltage	Key code
Standard version	230 V/50 (60) Hz	61
	24 V=	02

Further voltages available on request.

2/2 Way Valve

G1/2-G2

Actuation:
Pneumatic by permanent signal

Series ARKV

ARKV-..

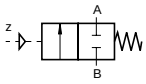

Characteristics to VDI 3290			Pressures quoted as gauge pressure				
Characteristics	Symbol	Unit	Description				
General Features							
Designation			2/2 way valve				
System			Poppet valve normally closed				
Mounting			Directly into tube				
Tube connection			Thread				
Port size			G1/2	G3/4	G1	G1 1/2	G2
Weight (mass)		kg	0.745	1.115	1.365	2.695	4.290
Installation			In any position				
Ambient temperature range	ϑ_{min} ϑ_{max}	°C °C	-20 +80	Note: When using below freezing			
Medium temperature range	ϑ_{min} ϑ_{max}	°C °C	0 +80	point (°C) it is necessary to consult us			
Operating medium			Compressed air, neutral gases, hydraulic fluid (only in cases of low flow rate and slow valve closing speeds)				
Actuating medium			Filtered compressed air				
Pneumatic Characteristics							
Nominal pressure	p_n	bar	6.3				
Operating pressure range	p_{min} p_{max}	bar bar	0 10				
Nominal flow	Q_N	l/min	2200	5000	6900	22000	40000
Actuation							
Pneumatic			Direct				

Actuating Pressure
Type: ARKV-15

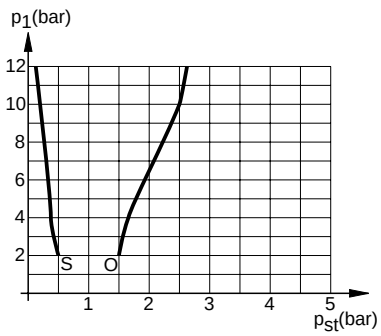

O = $p_{st\,min}$ for opening
S = $p_{st\,max}$ for closing

Actuating Pressure
Type: ARKV-20

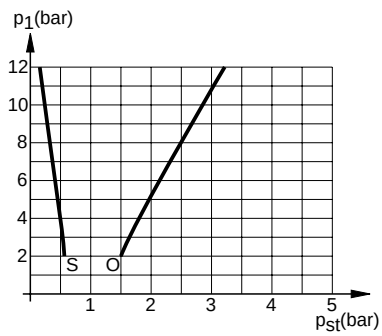

O = $p_{st\,min}$ for opening
S = $p_{st\,max}$ for closing

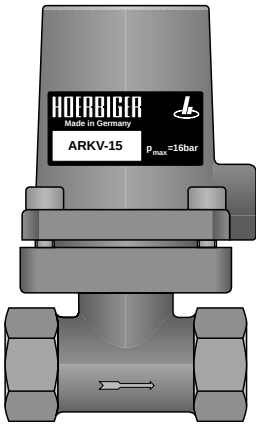

HOERBIGER ORIGA

Data Sheet No. 3.68.002E-1

A1P264E00FX40X

The right to introduce technical modifications is reserved

Actuating Pressure
Type: ARKV-25

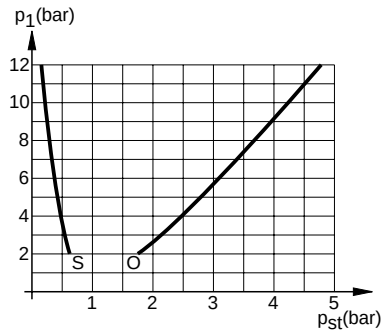

O = $p_{st\,min}$ for opening
S = $p_{st\,max}$ for closing

Actuating Pressure
Type: ARKV-40

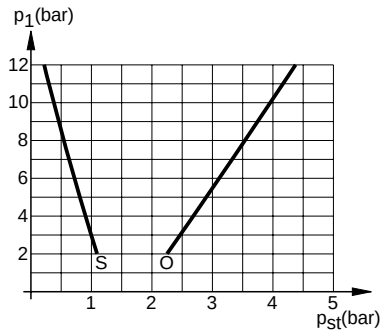

O = $p_{st\,min}$ for opening
S = $p_{st\,max}$ for closing

Actuating Pressure
Type: ARKV-50

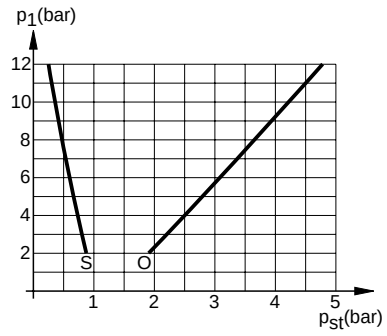

O = $p_{st\,min}$ for opening
S = $p_{st\,max}$ for closing

Dimensions

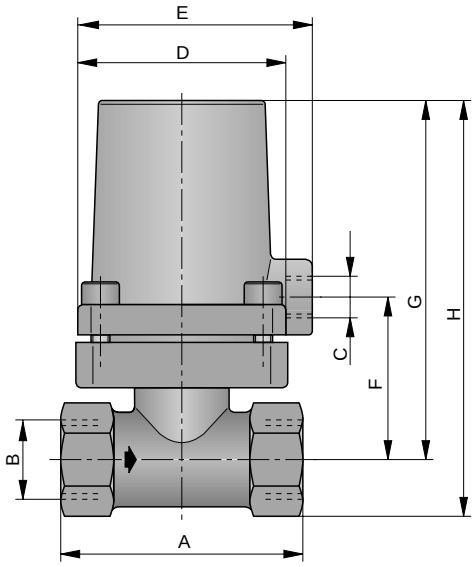

Dimension Table (mm) and Order Instructions

Order Instructions Type	Order No.	A	B	C	D	E	F	G	H
ARKV-15 NG	**PD 07334**	65	G1/2	G1/8	55	61	41.5	95	109.5
ARKV-20 NG	**PD 07580**	76	G3/4	G1/4	65	75	50	112	129
ARKV-25 NG	**PD 07581**	91	G1	G1/4	65	75	57	119	139
ARKV-40 NG	**PD 07757**	123	G1 1/2	G1/4	110	112	67	137	167.5
ARKV-50 NG	**PD 07765**	150	G2	G1/4	130	134	75	153	190

Base Plates

to ISO 5599
Sizes 1, 2, 3

Single base plates
- to VDMA 24345 Form A
- to VDMA 24345 Form B

Dimensions
Single Base Plate, Form A

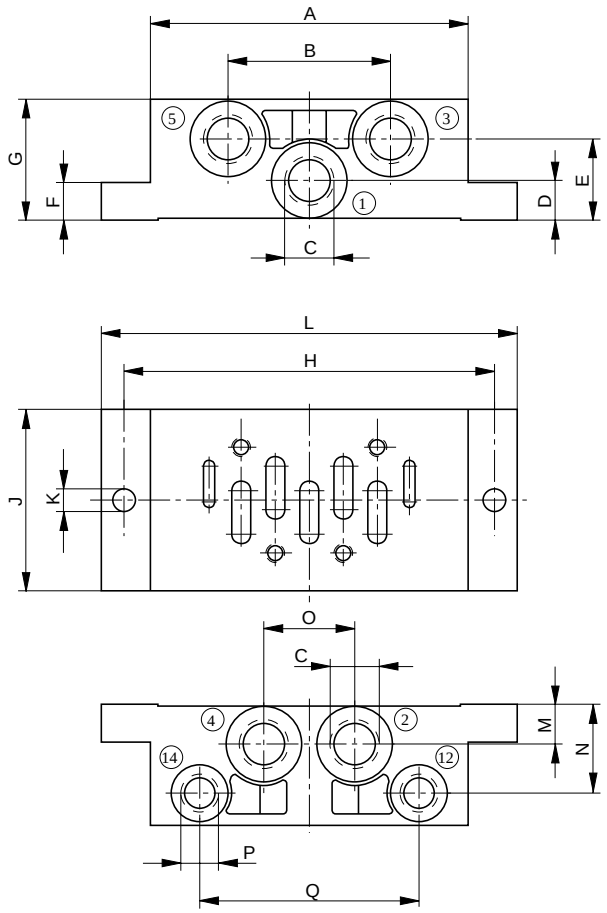

Dimensions Table (mm)

ISO Size	A	B	C	D	E	F	G	H
1	84	43	G1/4	10.5	21.5	10	32	98
2	95	56	G3/8	14	26	13	40	112
3	119	68	G1/2	17	17	18	32	136

ISO Size	J	K	L	M	N	O	P	Q
1	48	5.5	110	10.5	23.5	24	G1/8	58
2	57	6.6	124	14	30	30	G1/8	74
3	71	6.6	149	17	22	32	G1/8	90

Order Instructions

ISO Size	Order Instructions	
	Type	**Order No.**
1	**S9-1-A**	**KX 9076**
2	**S9-2-A**	**KX 9433**
3	**S9-3-A**	**KX 9434**

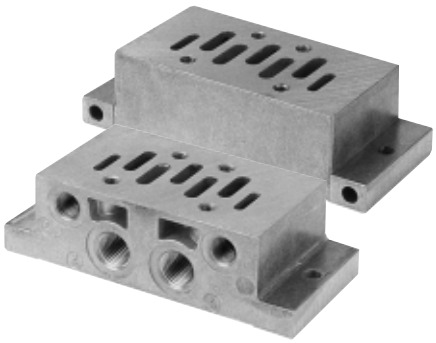

HOERBIGER ORIGA

Data Sheet No. 3.69.028E-1

A1P286E00JAA00X

The right to introduce technical modifications is reserved

Dimensions
Single Base Plate, Form B

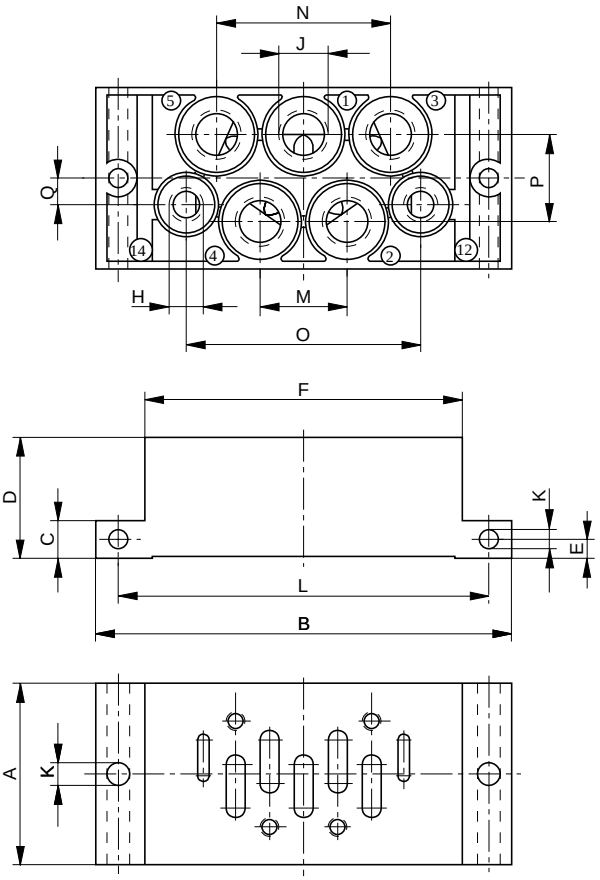

Dimensions Table (mm)

ISO Size	A	B	C	D	E	F	H	J	K	L	M	N	O	P	Q
1	46	110	10	30	5	84	G1/8	G1/4	5.5	98	23	46	62	23	7.5
2	56	124	13	35	6.5	95	G1/8	G3/8	6.6	112	28	56	73	27	7.5
3	71	149	18	32	9	119	G1/8	G1/2	6.6	136	34	68	90	35	10

Order Instructions

ISO Size	Order Instructions	
	Type	**Order No.**
1	**S9-1-B**	**KX 9077**
2	**S9-2-B**	**KX 9436**
3	**S9-3-B**	**KX 9437**

Base Plates

to ISO 5599
Sizes1, 2, 3

Versions to VDMA 24345
- **End plate set, Form D, to intermediate plate, Form C**
- **Intermediate plate, Form C**
- **Plate combinations of Forms C and D**
- **Angle base plate, Form E, for intermediate plate, Form C**
- **Accessories**

Base Plate Combinations

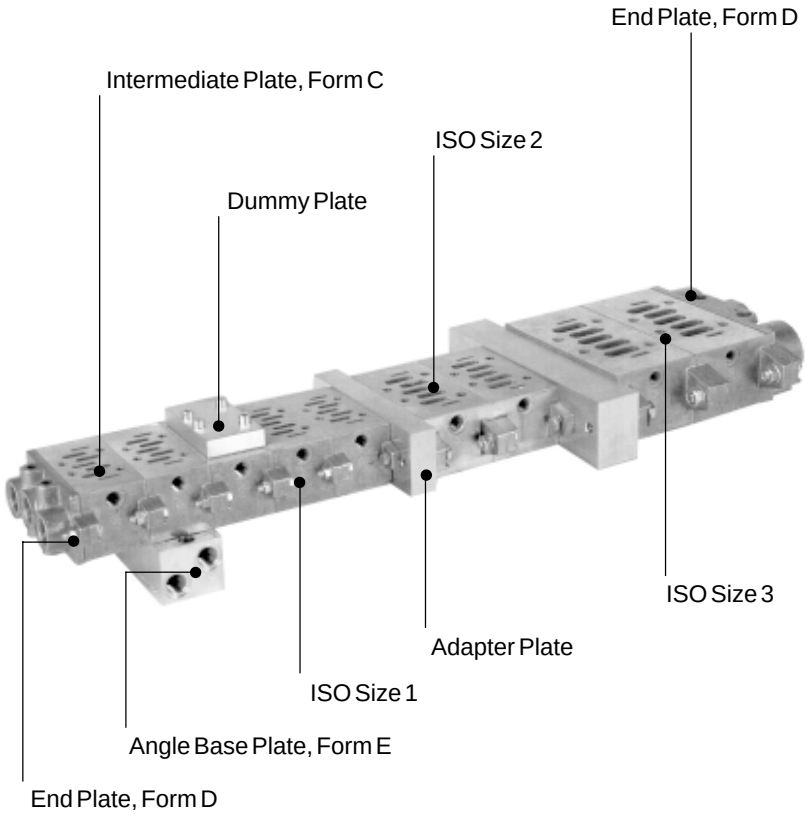

End Plate Set, Form D for Intermediate Plate

Order Instructions

ISO Size	Order Instructions Type	Order No.
1	**S9-1-D**	**KX 9078**
2	**S9-2-D**	**KX 9421**
3	**S9-3-D**	**KX 9422**

Comprises:
End plate set, complete with screws

Intermdiate Plate, Form C

Order Instructions

ISO Size	Order Instructions Type	Order No.
1	**S9-1-C**	**KX 9079**
2	**S9-2-C**	**KX 9419**
3	**S9-3-C**	**KX 9420**

Comprises:
Intermediate plate, complete with O-rings and screws

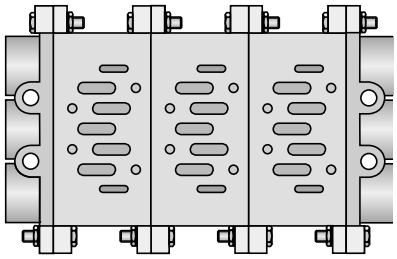

HOERBIGER ORIGA

A1P287E00JAA00X

The right to introduce technical modifications is reserved

Angle Base Plate, Form E, to Intermediate Base Plate, Form C

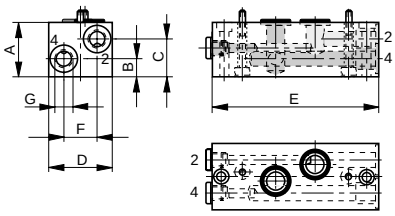

Dimensions Table (mm) and Order Instructions

Order Instructions Type	Order No.	ISO Size	A	B	C	D	E	F	G
S9-1-E	**KX 9081**	1	37	12	25	42	110	22	G1/4
-	**-**	2	-	-	-	-	-	-	-
S9-3-E	**KX 9425**	3	45	17	29	70	190	36	G1/2

Comprises: Angle base plate, complete with O-rings and screws

Adapter Plate for combining ISO Sizes 1, 2, 3

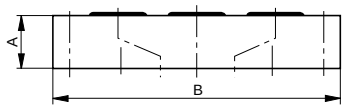

Dimensions Table (mm) and Order Instructions

Order Instructions Type	Order No.	For ISO Size	A	B	Width
S9-1-2-KP	**KX 9430**	1 to 2	20	135	45
S9-2-3-KP	**KX 9431**	2 to 3	25	190	55
S9-1-3-KP	**KX 9432**	1 to 3	35	190	50

Comprises: Adpater plate with O-rings and screws

Dummy Plate

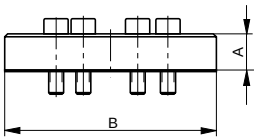

Dimensions Table (mm) and Order Instructions

Order Instructions Type	Order No.	ISO Size	A	B	Width
S9-1-BP	**KX 9082**	1	12	70	40
S9-2-BP	**KX 9423**	2	12	90	55
S9-3-BP	**KX 9424**	3	12	110	70

Comprises: Dummy plate with gasket and screws

Plug

Order Instructions

Order Instructions Type	Order No.	For ISO Size
S9-1-VS	**KX 5789**	1
S9-2-VS	**KX 9426**	2
S9-3-VS	**KX 9427**	3

Base Plate Combinations of Forms C and D

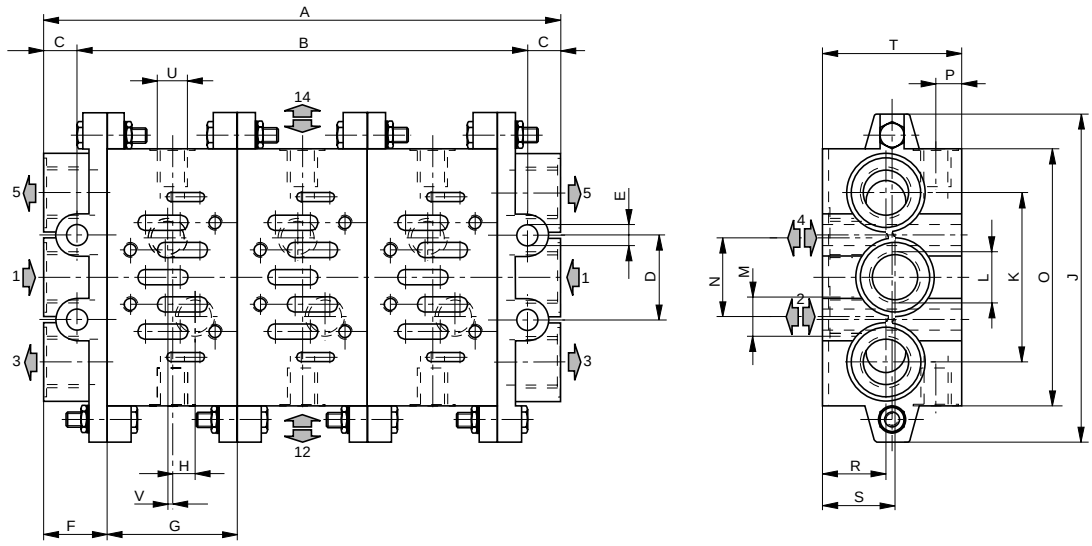

Shown: 3-fold plate combinations

Dimensions Table (mm)

ISO Size	Number of Plates	A	B	C	D	E	F	G	H	J	K
1	2	130	108	11	28	Ø7	22	43	7.5	110	56
1	3	173	151	11	28	Ø7	22	43	7.5	110	56
1	4	216	194	11	28	Ø7	22	43	7.5	110	56
1	5	259	237	11	28	Ø7	22	43	7.5	110	56
1	6	302	280	11	28	Ø7	22	43	7.5	110	56
2	2	164	138	13	35	Ø9	26	56	6	135	68
2	3	220	194	13	35	Ø9	26	56	6	135	68
2	4	276	250	13	35	Ø9	26	56	6	135	68
2	5	332	306	13	35	Ø9	26	56	6	135	68
2	6	388	362	13	35	Ø9	26	56	6	135	68
3	2	202	172	15	52	Ø12	30	71	8	190	104
3	3	273	243	15	52	Ø12	30	71	8	190	104
3	4	344	314	15	52	Ø12	30	71	8	190	104
3	5	415	385	15	52	Ø12	30	71	8	190	104
3	6	486	456	15	52	Ø12	30	71	8	190	104

ISO Size	Number of Plates	L	M	N	O	P	R	S	T	U	V
1	2	G3/8	G1/4	26	85	8.5	21	24	46	G1/8	1.5
1	3	G3/8	G1/4	26	85	8.5	21	24	46	G1/8	1.5
1	4	G3/8	G1/4	26	85	8.5	21	24	46	G1/8	1.5
1	5	G3/8	G1/4	26	85	8.5	21	24	46	G1/8	1.5
1	6	G3/8	G1/4	26	85	8.5	21	24	46	G1/8	1.5
2	2	G1/2	G3/8	30	100	9	22	24	47	G1/8	5
2	3	G1/2	G3/8	30	100	9	22	24	47	G1/8	5
2	4	G1/2	G3/8	30	100	9	22	24	47	G1/8	5
2	5	G1/2	G3/8	30	100	9	22	24	47	G1/8	5
2	6	G1/2	G3/8	30	100	9	22	24	47	G1/8	5
3	2	G1	G1/2	38	140	10	31	34	56	G1/8	6
3	3	G1	G1/2	38	140	10	31	34	56	G1/8	6
3	4	G1	G1/2	38	140	10	31	34	56	G1/8	6
3	5	G1	G1/2	38	140	10	31	34	56	G1/8	6
3	6	G1	G1/2	38	140	10	31	34	56	G1/8	6

Order Instructions for Base Plate Combinations

Description	ISO Size	Order Instructions Type	Order No.
Plate combination for 2 valves	1	**S9-1-002**	**PD 30076-0002**
	2	**S9-2-002**	**PD 32951-0002**
	3	**S9-3-002**	**PD 32952-0002**
Plate combination for 3 valves	1	**S9-1-003**	**PD 30076-0003**
	2	**S9-2-003**	**PD 32951-0003**
	3	**S9-3-003**	**PD 32952-0003**
Plate combination for 4 valves	1	**S9-1-004**	**PD 30076-0004**
	2	**S9-2-004**	**PD 32951-0004**
	3	**S9-3-004**	**PD 32952-0004**
Plate combination for 5 valves	1	**S9-1-005**	**PD 30076-0005**
	2	**S9-2-005**	**PD 32951-0005**
	3	**S9-3-005**	**PD 32952-0005**
Plate combination for 6 valves	1	**S9-1-006**	**PD 30076-0006**
	2	**S9-2-006**	**PD 32951-0006**
	3	**S9-3-006**	**PD 32952-0006**

Plate combinations made up to customer's requirements on request

Accessories

Adapter plate for pressure switch*	1	**S9-1-DR**	**KX 9293**
	2	**S9-2-DR**	**KX 9428**
	3	**S9-3-DR**	**KX 9429**
Adapter plate with built-in pressure regulator	1	**S9-1-RE**	**PD 31826**
	3	**S9-3-RE**	**PD 33098**

* Pressure switches available on request

Base Plates

to VDMA Size 01

Single base plates
- to VDMA 24563 Form A

Port size G1/8, G1/4

Dimensions (mm)
Single Base Plate, Form A – Port Size G1/8

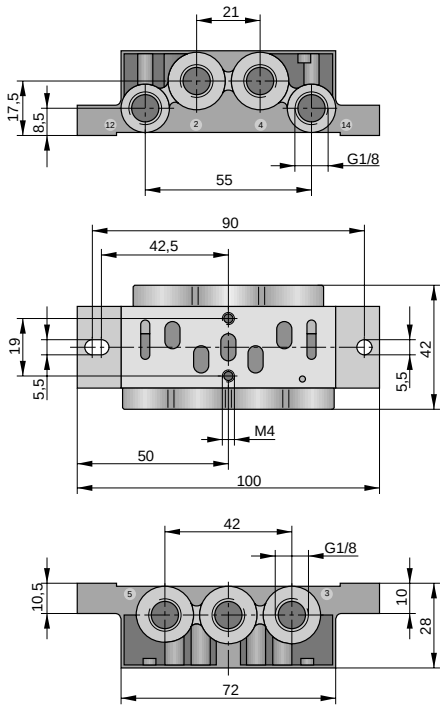

Order Instructions: Type S20-01-1/8-A Order No. **KL8004**

Dimensions (mm)
Single Base Plate, Form A – Port Size G1/4

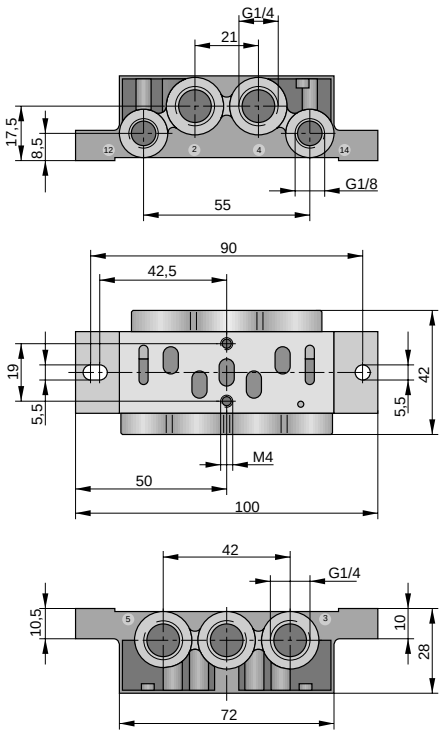

Order Instructions: Type S20-01-1/4-A Order No. **KL8005**

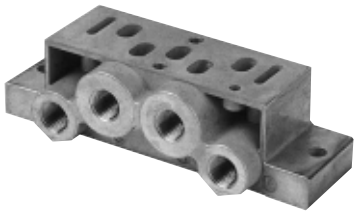

HOERBIGER ORIGA

A1P608E00JAA00X

The right to introduce technical modifications is reserved

Base Plates

to VDMA Size 01

Modules for base plate manifolds to VDMA 24563
- **End plate set, Form D, to intermediate plate, Form C**
- **Angle base plate, Form E, for intermediate plate, Form C**
- **Accessories**

Port size G1/8, G1/4

End Plate Set, Form D for Intermediate Plate

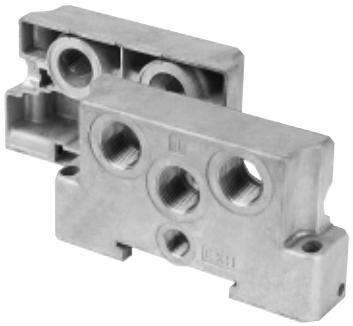

Order Instructions

VDMA Size	Order Instructions Type	Order No.
01	**S20-01-D**	**KL 8008**

Comprises:
End plate set, complete with screws

Intermdiate Plate, Form C

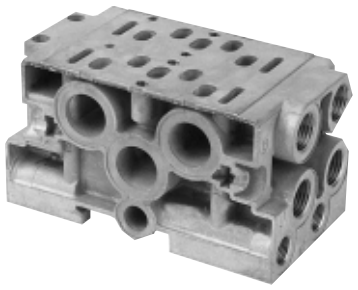

Order Instructions

VDMA Size	Order Instructions Type	Order No.
01 (G1/8)	**S20-01-C**	**KL 8006**
01 (G1/4)	**S20-01-C**	**KL 8007**

Comprises:
Intermediate plate, complete with O-rings and screws

Dummy Plate

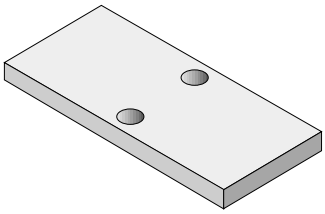

Order Instructions

VDMA Size	Bestellangabe Type	Order No.
01	**S20-01-BP**	**KL 8009**

Comprises: Dummy plate with gasket and screws

Pressure Module with Gasket

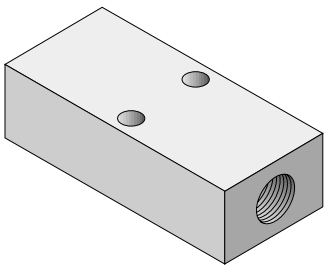

Order Instructions

VDMA Size	Bestellangabe Type	Order No.
01	**S20-01-DM**	**KL 8010**

Comprises:
Pressure module with gasket

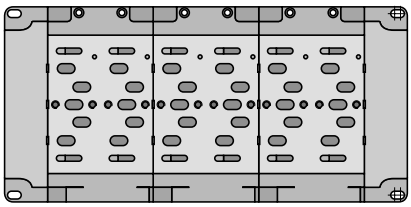

HOERBIGER ORIGA

A1P609D00GY00X

The right to introduce technical modifications is reserved

Dimensions (mm)
Base Plate Combinations of Forms C and D – Port Size G1/8

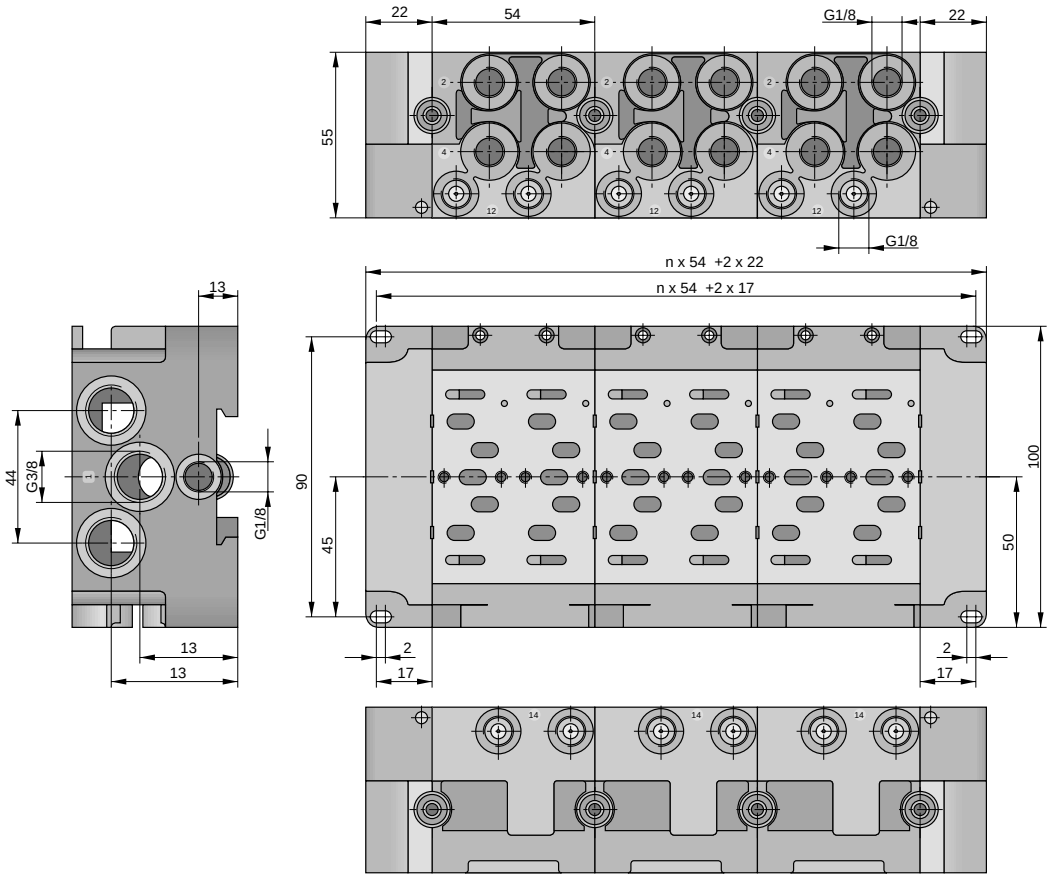

n = number of base plates

Dimensions (mm)
Base Plate Combinations of Forms C and D – Port Size G1/4

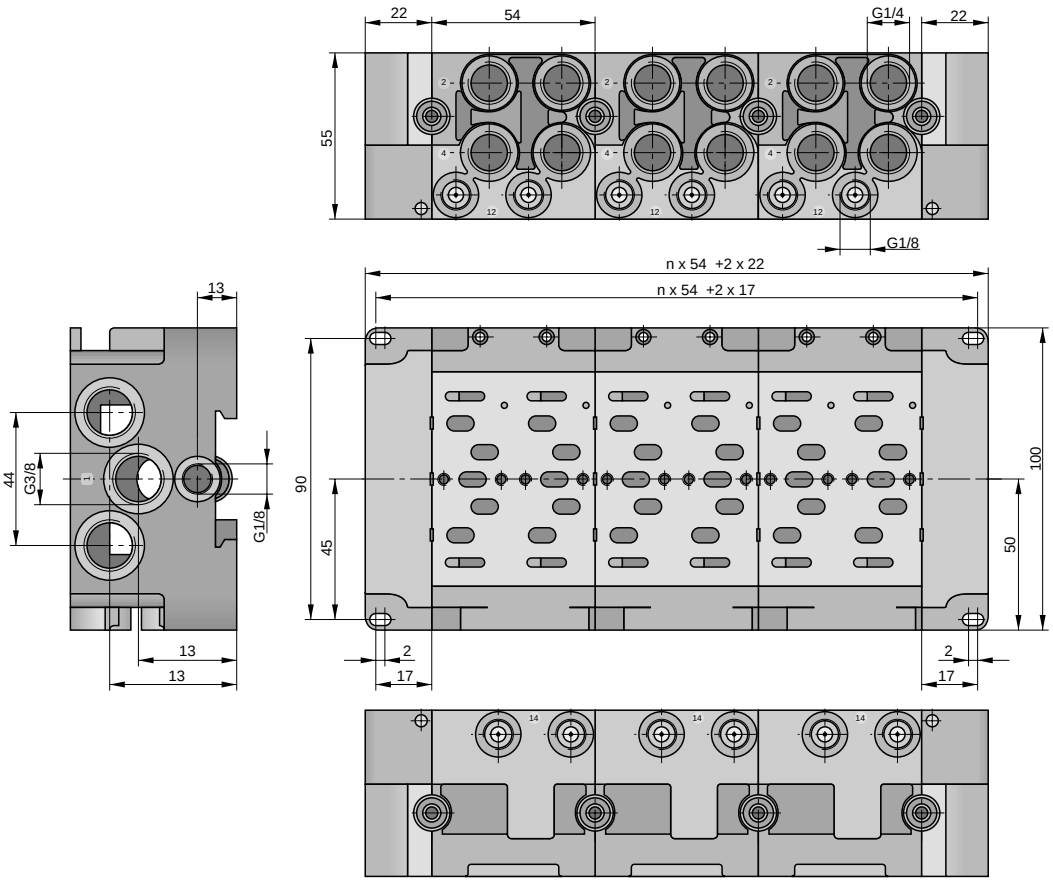

n = number of base plates

Order Instructions for Base Plate Combinations

Description	Port size	Number of Valves	Order Instructions Type	Order Instructions Order No.
Plate combination	G1/8	2	**S20-1/8-002**	**PD 43963-0002**
		4	**S20-1/8-004**	**PD 43963-0004**
		6	**S20-1/8-006**	**PD 43963-0006**
	G1/4	2	**S20-1/4-002**	**PD 43964-0002**
		4	**S20-1/4-004**	**PD 43964-0004**
		6	**S20-1/4-006**	**PD 43964-0006**

AUTOMATION
TECHNOLOGY

NON-RETURN AND FLOW CONTROL VALVES
G1/8 -G1 1/2

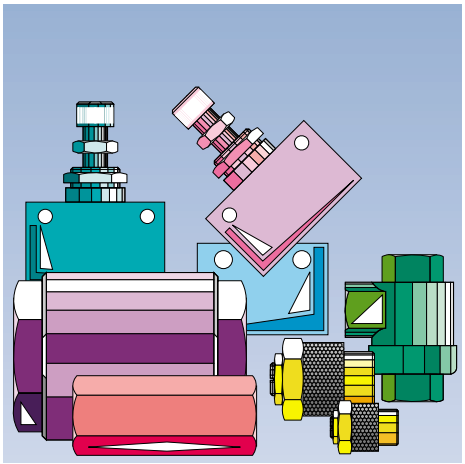

.... intelligent solutions
for automatad movement

HOERBIGER
ORIGA

Table of Contents Non-Return Valves, Flow Control Valves

Survey	4.01.001E

Non-Return Valves

Check valves series RV	4.10.001E
Check valves series RV9	4.11.001E
Shuttle valves series OR8	4.20.001E
Quick exhaust valves series SV	4.30.001E
Throttle non-return valves series DRV	4.40.002E
Throttle non-return valves series EDRV	4.45.001E
Einschraub-Drosselrückschlagventile – Baureihe EDRV, SEDRV	4.45.002E

Flow Control Valves

Throttle valves series DV	4.50.002E
Einschraub-Drosselventile EDV, SEDV	4.50.003E
Exhaust throttle valves series DVE	4.55.001E

Special Valves

AND-Valve series AND8	4.90.002E

HOERBIGER - ORIGA GmbH, D-86 956 Schongau, Martina Hörbiger Straße 5,
Telefon (08861) 210-400, Telefax (08861) 210-305, pneu@hoerbiger.de
HOERBIGER - ORIGA Pneumatik GMBH, A-2700 Wiener Neustadt, Johann Giefing-Straße 12,
Telefon (02622) 26071, Telefax (02622) 26071-5, amarket@hoerbiger-origa. com
HOERBIGER - ORIGA LTD, Tewkesbury Industrial Estate, Tewkesbury GL20 8 ND GB,
Telefon (01684) 850000, Telefax (01684) 850555, marketing@hoerbiger-origa.com

PNEUMATIC
GROUP

NON-RETURN VALVES AND FLOW CONTROL VALVES G1/8-G11/2 SPECIAL VALVES

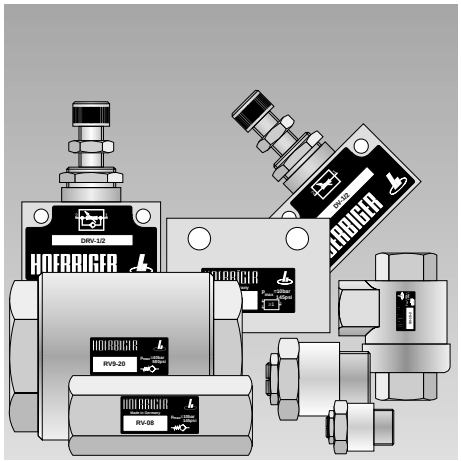

HOERBIGER
ORIGA

Fig.	Description	Symbol	Series	Port size	Data sheet No.
	Check valves		**RV**	G1/8, G1/4	4.10.001E
	Check valves		**RV9**	G3/8, G11/2	4.11.001E
	Shuttle Valves	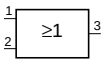	**OR8**	G1/8, G1/4	4.20.001E
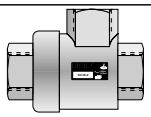	Quick exhaust valves	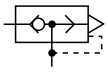	**SV**	G1/8-G3/4	4.30.001E
	Throttle non-return valves	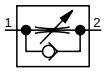	**DRV**	G1/8-G1/2	4.40.002E
	Throttle non-return valves	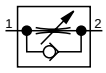	**EDRV**	G1/8, G1/4	4.45.001E
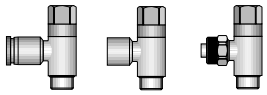	Throttle non-return valves	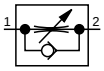	**EDRV** **SEDRV**	M5- G1/4	4.45.002E
	Throttle valves	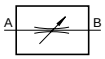	**DV**	G1/8-G1/2	4.50.002E
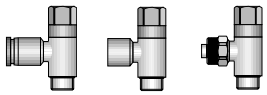	Throttle valves	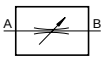	**EDV/SEDV**	M5-G1/4	4.50.003E
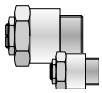	Throttle valves	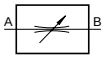	**DVE**	G1/8-G1/2	4.55.001E
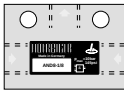	AND-valves		**AND8**	G1/8	4.90.002E

A3P026E71JX00X

The right to introduce technical modifications is reserved

HOERBIGER - ORIGA GmbH, D-86 956 Schongau, Martina Hörbiger Straße 5,
Telefon (08861) 210-400, Telefax (08861) 210-305, pneu@hoerbiger.de
HOERBIGER - ORIGA Pneumatik GMBH, A-2700 Wiener Neustadt, Johann Giefing-Straße 12,
Telefon (02622) 26071, Telefax (02622) 26071-5, amarket@hoerbiger-origa. com
HOERBIGER - ORIGA LTD, Tewkesbury Industrial Estate, Tewkesbury GL20 8 ND GB,
Telefon (01684) 850000, Telefax (01684) 850555, marketing@hoerbiger-origa.com

Check Valve

G1/8,G1/4

Series RV

RV-..

Characteristics according to VDI 3293			Pressures quoted as gauge pressure	
Characteristics	Symbol	Unit	Description	
General features				
Type			Spring loaded check valve	
Mounting			Directly in tubing	
Tube connection			Thread	
Port size			G1/8	G1/4
Weight (mass)		kg	0.02	0.02
Installation			In any position	
Ambient temperature range	ϑ_{min} ϑ_{max}	°C °C	-20 +80	Note: When using below freezing point (°C) it is necessary to consult us
Medium temperature range	ϑ_{min} ϑ_{max}	°C °C	0 +80	
Medium			Filtered compressed air, gases, fluids	
Lubrication			Oil mist lubrication compatible with Buna N	
Pneumatic Characteristics				
Nominal pressure	p_n	bar	6	
Operating pressure range	p_{min} p_{max}	bar bar	0.5 10	
Nominal flow	Q_N	l/min	700	1000
Flow direction			In one direction	
Differential pressure for opening		bar	<0.5	

Dimensions (mm)

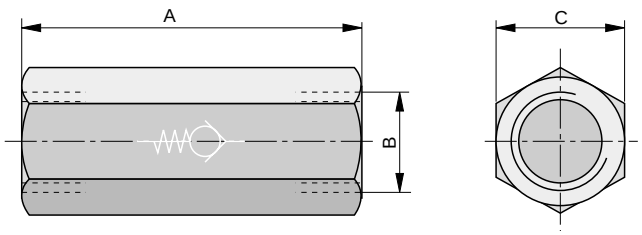

Dimension Table (mm)

Type	A	B	C
RV-06	40	G1/8	SW17
RV-08	45	G1/4	SW17

Order Instructions: **RV-06** **PA 10224**
RV-08 **PA 12007**

For product group list see 4.01.001E

Data Sheet No. 4.10.001E

RV series check valves are designed for continuous flow (not suitable for pulsating flow).

HOERBIGER ORIGA

A1P134D00LW00X

The right to introduce technical modifications is reserved

Check Valve

G3/8-G11/2

Series RV9

RV9-..

Characteristics according to VDI 3293			Pressures quoted as gauge pressure					
Characteristics	Symbol	Unit	Description					
General Features								
Type			Spring loaded check valve					
Mounting			Directly into tubing					
Tube connection			Thread					
Port size			G3/8	G1/2	G3/4	G1	G11/4	G11/2
Weight (mass)		kg	0.18	0.19	0.27	0.49	0.74	0.98
Installation			In any position					
Ambient temperature range	ϑ_{min} ϑ_{max}	°C °C	-20 +80	Note: When using below freezing				
Medium temperature range	ϑ_{min} ϑ_{max}	°C °C	0 +110	point (°C) it is necessary to consult us				
Medium			Filtered compressed air, cold and warm water, various oils					
Lubrication			Oil mist lubrication compatible with Buna N					
Material			Housing: brass Valve disc and guide: brass Seal/spring interface dish: stainless CrNi steel Spring: stainless CrNi steel Valve seal disc: special synthetic rubber composition					
Pneumatic Characteristics								
Nominal pressure	p_n	bar	6					
Operating pressure range	p_{min} p_{max}	bar bar	0.2 40					
Nominal flow	Q_N	l/min	3400	4335	7585	12500	20835	33335
Flow direction			In one direction					
Pressure difference for opening		bar	0.2					

Dimensions (mm)

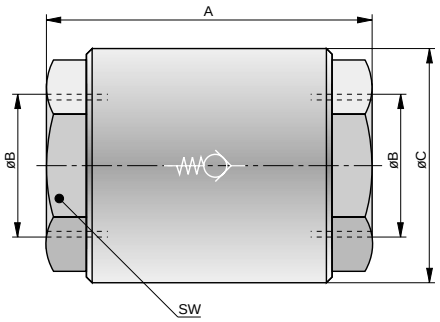

Dimension Table (mm)*

Order Instructions Type	Order No.	A	B	C	SW
RV9-10	**PD 36114**	54	G3/8x10 d.	34	23
RV9-15	**PD 36335**	57	G1/2x10 d.	34	27
RV9-20	**PD 36336**	64	G3/4x10 d.	41	33
RV9-25	**PD 36337**	75	G1x12 d.	48	40
RV9-32	**PD 36338**	82	G11/4x12 d.	60	50
RV9-40	**PD 36339**	93	G11/2x14 d.	71	55

* Other sizes available on request

For product group list see 4.01.001E

Data Sheet No. 4.11.001E

RV9 series check valves are designed for contiuous flow (not suitable for pulsating flow).

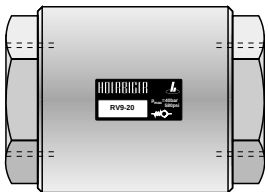

HOERBIGER ORIGA

A1P135E00JX00X

The right to introduce technical modifications is reserved

Shuttle Valve

G1/8,G1/4

Series OR 8

OR 8-.

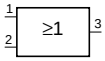

Characteristics according to VDI 3293			Pressures quoted as gauge pressure	
Characteristics	Symbol	Unit	Description	
General Features				
Type			Poppet valve	
Mounting			2 through-bolts M5	
Tube connection			Thread	
Port size			G1/8	G1/4
Weight (mass)		kg	0.05	0.08
Installation			In any position	
Ambient temperature range	ϑ_{min} ϑ_{max}	°C °C	-20 +80	Note: When using below freezing point (°C) it is necessary to consult us
Medium temperature range	ϑ_{min} ϑ_{max}	°C °C	0 +80	
Medium			Filtered compressed air	
Lubrication			With or without oil mist lubrication	
Pneumatic Characteristics				
Nominal pressure	p_n	bar	6	
Operating pressure range	p_{min} p_{max}	bar bar	0.5 10	
Nominal flow	Q_N	l/min	385	635

Dimensions (mm)

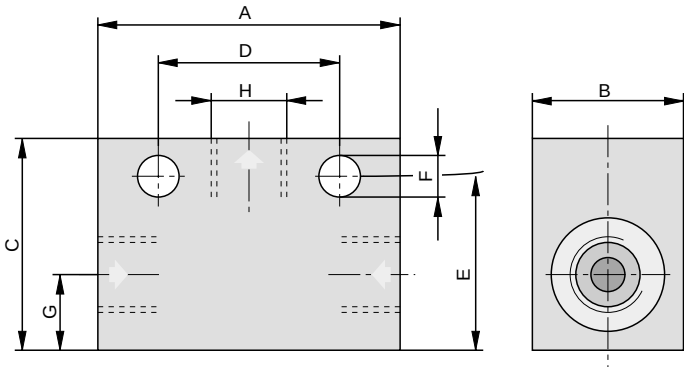

Dimension Table (mm)

Type	A	B	C	D	E	F	G	H
OR 8-1/8	40	20	28	24	23	5.5	10	G1/8
OR 8-1/4	45	20	35	24	27	5.5	10	G1/4

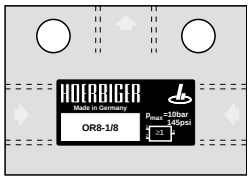

Order Instructions: **OR 8-1/8** **PA 10206**
OR 8-1/4 **PA 12516**

For product group list see 4.01.001E

Data Sheet No. 4.20.001E

A1P136E00JX00X

The right to introduce technical modifications is reserved

HOERBIGER ORIGA

Quick Exhaust Valve

G1/8-G3/4

Series SV

SV-..

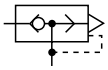

Characteristics according to VDI 3293			Pressure quoted as gauge pressure			
Characteristics	Symbol	Unit	Description			
General Features						
Type			Poppet valve			
Mounting			Directly in tubing			
Tube connection			Thread			
Port size			G1/8	G1/4	G1/2	G3/4
Weight (mass)		kg	0.088	0.143	0.334	0.790
Installation			In any position			
Ambient temperature range	ϑ_{min} ϑ_{max}	°C °C	-10 +80	Note: When using below freezing		
Medium temperature range	ϑ_{min} ϑ_{max}	°C °C	0 +80	point (°C) it is necessary to consult us		
Medium			Filtered compressed air			
Lubrication			Oil mist lubrication compatible with Buna N			
Pneumatic Characteristics						
Nominal pressure	p_n	bar	6			
Operating pressure range	p_{min} p_{max}	bar bar	0.5 10			
Nominal flow A→R	Q_N	l/min	800	1670	4500	10750

Dimensions (mm)

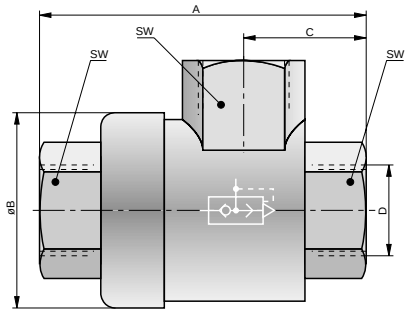

Dimension Tabel (mm)

Type	A	B	C	D	SW
SV-06-2	42	Ø 27.5	15	G1/8	15
SV-08-2	54	Ø 33	19	G1/4	19
SV-10-2	54	Ø 33	19	G3/8	19
SV-15-2	72	Ø 43	27	G1/2	26
SV-20-2	87	Ø 49	35.5	G3/4	32

Order Instructions and Weight

Order Instructions		Weight (mass) kg
Type	**Order No.**	
SV-06-2	**PD 39152**	0.088
SV-08-2	**PD 39153**	0.143
SV-10-2	**PD 39154**	0.140
SV-15-2	**PD 39155**	0.334
SV-20-2	**PD 39156**	0.790

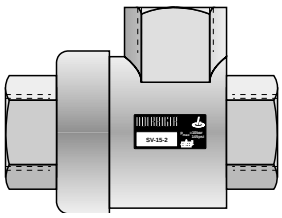

For product group list see 4.01.001E

Data Sheet No. 4.30.001E

A1P137E00JX00X

The right to introduce technical modifications is reserved

HOERBIGER ORIGA

Throttle Non-Return Valve

M5-G1/2

Series DRV

DRV-..

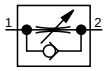

Characteristics according to VDI 3293 Pressures quoted as gauge pressure

Characteristics	Symbol	Unit	Description				
General Features							
Type			Throttle valve with parallel check valve				
Mounting			Directly in tubing 2 through-bolts panel mounting				
Tube connection			Thread				
Port size			M5	G1/8	G1/4	G3/8	G1/2
Weight (mass)		kg	0.020	0.035	0.130	0.225	0.245
Installation			In any position				
Ambient temperature range	ϑ_{min} ϑ_{max}	°C °C	-20 +80	Note: When using below freezing point (°C) it is necessary to consult us			
Medium temperature range	ϑ_{min} ϑ_{max}	°C °C	0 +80				
Medium			Filtered compressed air				
Lubrication			Oil mist lubrication compatible with Buna N				
Pneumatic Characteristics							
Nominal pressure	p_n	bar	6				
Operating pressure range	p_{min} p_{max}	bar bar	0.5 10				
Nominal flow [1] (Throttle valve)	Q_N	l/min	80	125	450	1100	1200
Nominal flow [2] (Check valve)	Q_N	l/min	80	125	450	1100	1200
Differential pressure for opening the check valve	bar		<0.5				

[1]) If the throttle is completely open
[2]) If the throttle is completely closed

Flow Characteristics
Type: DRV-M5

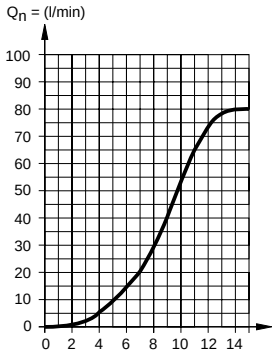

Turns of adjusting screw

Flow Characteristics
Type: DRV-1/8

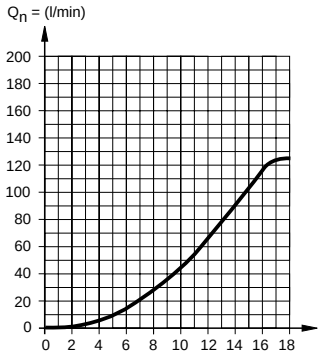

Turns of adjusting screw

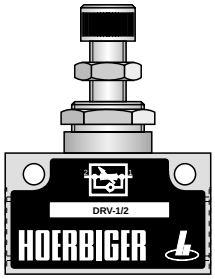

For product group list see 4.01.001E

A1P303E00JX00X

The right to introduce technical modifications is reserved

Flow Characteristics Type: DRV-1/4

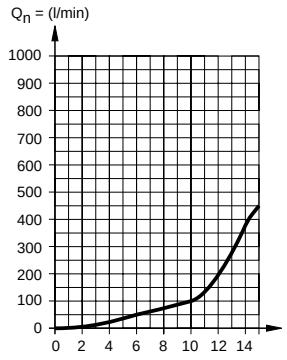

Turns of adjusting screw

Flow Characteristics Type: DRV-3/8

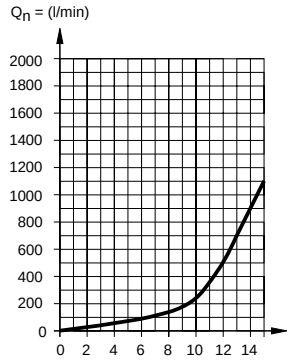

Turns of adjusting screw

Flow Characteristics Type: DRV-1/2

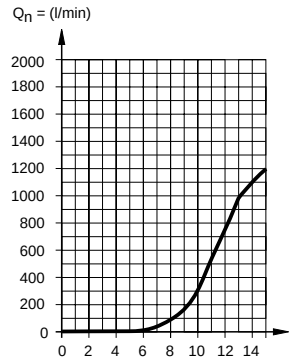

Turns of adjusting screw

Dimensions

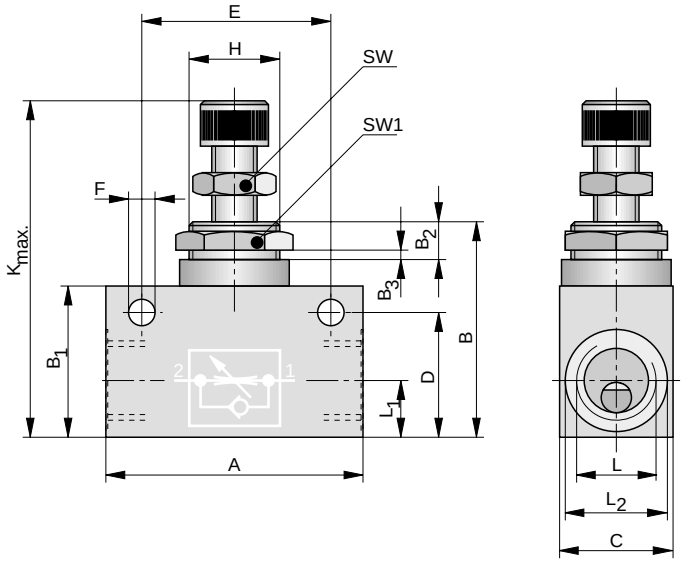

Dimension Table (mm) and Order Instructions

Order Instructions Typ	Order No.	A	B	B_1	B_2	B_3	C	D	E	ØF	H	L	L1	ØL_2	K_{max}	SW	SW_1
DRV-M5	**PA 10232**	26	16	26.5	6	2.5	14	12.5	18	4.4	M10x1	M5	5.5	8.5	44	7	14
DRV-1/8	**PA 10233**	32.5	22	31.5	6	2.5	16	17.5	24	4.4	M12x1	G1/8	9	13.5	52	10	17
DRV-1/4	**PA 12594**	55	32	48	10	4.5	25	25	35	6.5	M20x1.5	G1/4	12	19	72	13	22
DRV-3/8	**PA 16143**	58	40	57	10	5.0	30	33	43	6.5	M24x1.5	G3/8	13.5	23	92	19	27
DRV-1/2	**PA 16144**	68	40	57	10	5.0	30	33	50	6.5	M24x1.5	G1/2	15	27.5	92	19	27

Throttle Non-Return Valve

G1/8,G1/4

(speed regulating valve)

Series EDRV

EDRV-..

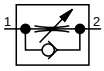

Characteristics according to VDI 3291			Pressures quoted as gauge pressure	
Characteristics	Symbol	Unit	Description	
General Features				
Type			Spring loaded throttle non-return valve	
Mounting			Screw-in valve	
Tube connection			Thread	
Port size			G1/8	G1/4
Weight (mass)		kg	0.03	0.04
Installation			in any position	
Ambient temperature range	ϑ_{min} ϑ_{max}	°C °C	-10 +60	Note: When using below freezing point (°C) it is necessary to consult us
Medium temperature range	ϑ_{min} ϑ_{max}	°C °C	-10 +60	
Medium			Filtered compressed air	
Lubrication			Oil mist lubrication compatible with Buna N	
Pneumatic Characteristics				
Nominal pressure	p_n	bar	6	
Operating pressure range	p_{min} p_{max}	bar bar	0.5 10	
Nominal flow Throttle valve (throttle completely open)	Q_N	l/min	250	400
Nominal flow Check valve (throttle completely closed)	Q_N	l/min	350	450

This valve is used for regulating the piston speed of pneumatic cylinders.

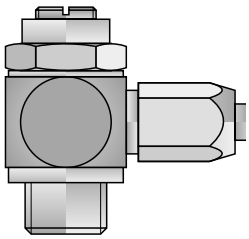

A1P139E00JX00X

The right to introduce technical modifications is reserved

For product group list see 4.01.001E

Dimensions

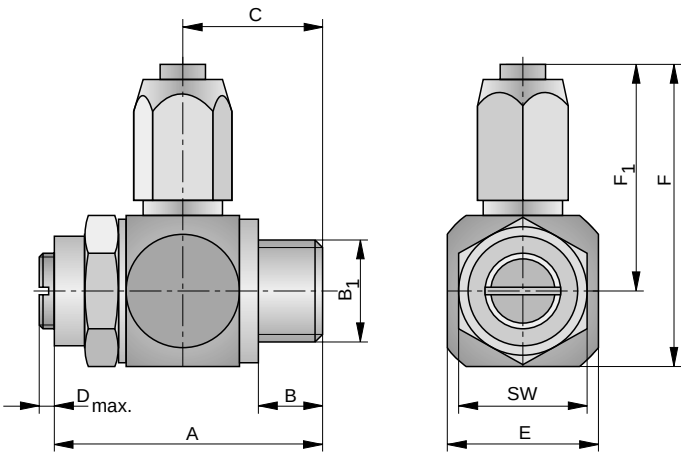

Dimension Table (mm) and Order Instructions

Order Instructions Type	Order No.	Tube ØDA/DI	A	B	B_1	C	D_{max}	E	F	F_1	SW
EDRV-06-5/3	**PA 10018**	5/3	34	8	G1/8	16.5	1	16	18.5	26.5	14
EDRV-06-6/4	**PA 10019**	6/4	34	8	G1/8	16.5	1	16	21.5	29.5	14
EDRV-06-8/6	**PA 10020**	8/6	34	8	G1/8	16.5	1	16	22.5	30.5	14
EDRV-08-6/4	**PA 12001**	6/4	38	10.5	G1/4	19	1.2	20	23	33	17
EDRV-08-8/6	**PA 12002**	8/6	38	10.5	G1/4	19	1.2	20	24	34	17
EDRV-08-10/8	**PA 12003**	10/8	38	10.5	G1/4	19	1.2	20	26	36	17

Screw-In Throttle Non-Return Valves

M5-G1/4

With tube connection

For throttling air inlet or exhaust

Series

EDRV-....
SEDRV-...

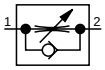

Characteristics according to VDI 3291			Pressures quoted as gauge pressure		
Characteristics	Symbol	Unit	Description		
General Features					
Type			Spring loaded throttle non-return valve		
Mounting			Screw-in valve		
Tube connection			Thread		
Port size			M5	G1/8	G1/4
Weight (mass)		kg	0.019	0.042	0.083
Installation			in any position		
Ambient temperature range	ϑ_{min} ϑ_{max}	°C °C	-10 +70	Note: When using below freezing	
Medium temperature range	ϑ_{min} ϑ_{max}	°C °C	-10 +70	point (°C) it is necessary to consult us	
Medium			Filtered compressed air		
Lubrication			Oil mist lubrication compatible with Buna N		
Pneumatic Characteristics					
Nominal pressure	p_n	bar	6		
Operating pressure range	p_{min} p_{max}	bar bar	0.5 10		
Nominal flow Throttle valve (throttle completely open)	Q_N	l/min	45	200	450
Nominal flow Check valve (throttle completely closed)	Q_N	l/min	30	140	380

Flow Characteristics
Type: EDRV/SEDRV-M5

Tube Ø DI 3 mm

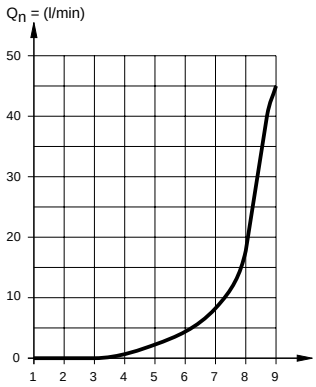

Turns of regulation spindle

Flow Characteristics
Type: EDRV/SEDRV-G1/8

Tube Ø DI 6 mm

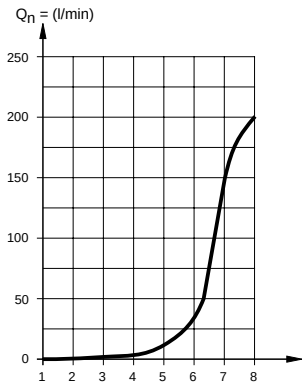

Turns of regulation spindle

Flow Characteristics
Type: EDRV/SEDRV-G1/4

Tube Ø DI 8 mm

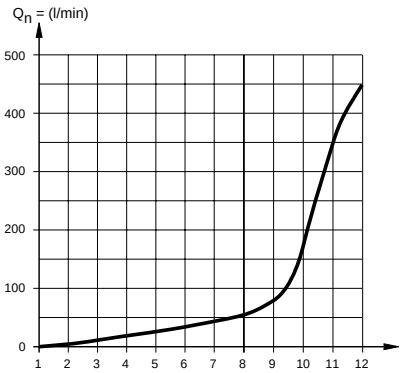

Turns of regulation spindle

These valves are used to regulate the piston speed of pneumatic cylinders.

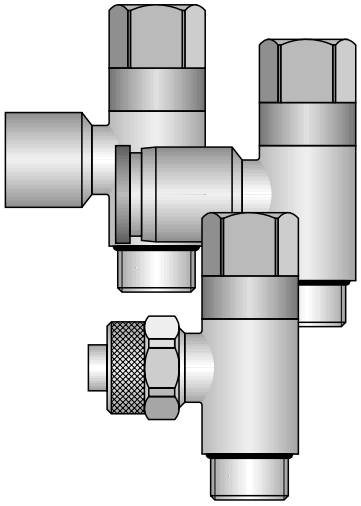

A1P522E00JX00X

The right to introduce technical modifications is reserved

Screw-In Throttle Non-Return Valves for Air Inlet Throttling

Screw-In Throttle Non-Return Valve Type: EDRV-....BI

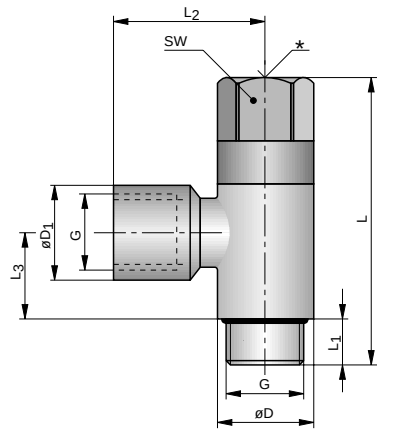

* Throttle screw

Screw-In Throttle Non-Return Valve Type: EDRV-....B

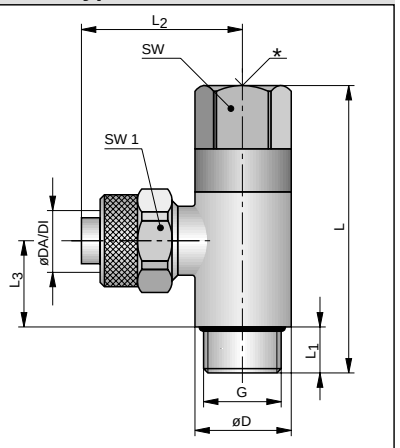

* Throttle screw

Screw-In Throttle Non-Return Valve Type: SEDRV-....B

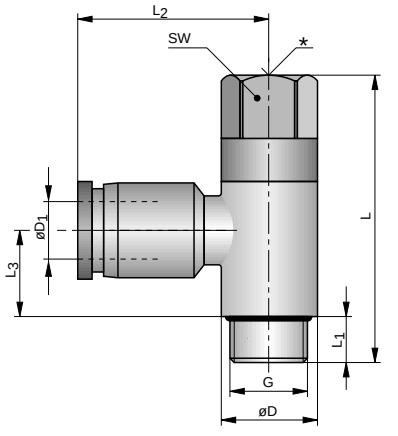

* Throttle screw

Screw-In Throttle Non-Return Valve with Push-On Connector - Type SEDRV....B
Dimension Table (mm) and Order Instructions

Order Instructions Type	Order-No.	Tube ØDA	Port size G	SW	SW1	ØD	$ØD_1$	L	L_1	L_2	L_3
SEDRV-184B	**KW 0530**	4	G1/8	12	-	14	11	37	7	25	11.5
SEDRV-185B	**KW 0531**	5	G1/8	12	-	14	12	37	7	25	11.5
SEDRV-186B	**KW 0532**	6	G1/8	12	-	14	13	37	7	26	11.5
SEDRV-146B	**KW 0533**	6	G1/4	16	-	18	13	50	9	28	15
SEDRV-188B	**KW 0534**	8	G1/8	12	-	14	15	37	7	31	11.5
SEDRV-148B	**KW 0535**	8	G1/4	16	-	18	15	50	9	31	15
SEDRV-1410B	**KW 0536**	10	G1/4	16	-	18	18	50	9	36	15

Screw-in Throttle Non-Return Valve with Union Nut - Type....B
Dimension Table (mm) and Order Instrctions

Order Instructions Type	Order-No.	Tube ØDA/DI	Port size G	SW	SW1	ØD	$ØD_1$	L	L_1	L_2	L_3
EDRV-184B	**KW 0539**	4/2	G1/8	12	10	14	-	37	6	28	11.5
EDRV-185B	**KW 0540**	5/3	G1/8	12	10	14	-	37	6	28	11.5
EDRV-186B	**KW 0541**	6/4	G1/8	12	12	14	-	37	6	27.5	11.5
EDRV-146B	**KW 0542**	6/4	G1/4	16	12	18	-	50	8	30	15
EDRV-188B	**KW 0543**	8/6	G1/8	12	14	14	-	37	6	28	11.5
EDRV-148B	**KW 0544**	8/6	G1/4	16	14	18	-	50	8	31	15
EDRV-1410B	**KW 0545**	10/8	G1/4	16	16	18	-	50	8	29.5	15

Einschraub-Drosselrückschlagventil mit Innengewinde - Typ EDRV-....BI
Maßtabelle (mm) und Bestellangaben

Order Instructions Type	Order-No.	Internal Thread. D1	Port Size G	SW	SW1	ØD	$ØD_1$	L	L_1	L_2	L_3
EDRV-1818BI	**KW 0537**	G1/8	G1/8	12	-	14	13.5	37	7	20.5	11.5
EDRV-1414BI	**KW 0538**	G1/4	G1/4	16	-	18	17	50	8	29.5	15

Screw-In Throttle Non Return Valves for Exhaust Throttling

Screw-In Throttle Non-Return Valve Type: EDRV-....AI

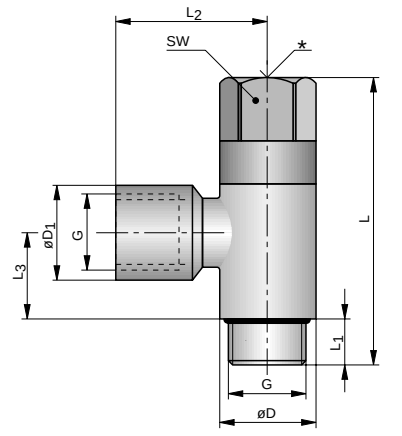

* Throttle screw

Screw-In Throttle Non-Return Valve Type: EDRV-....A

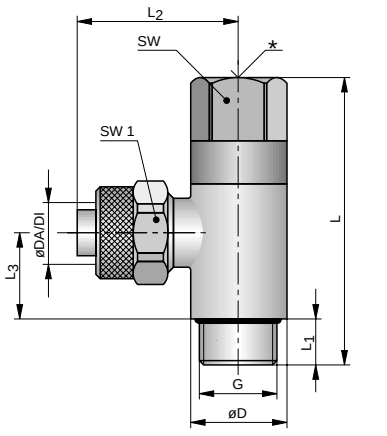

* Throttle screw

Screw-In Throttle Non-Return Valve Type: SEDRV-....A

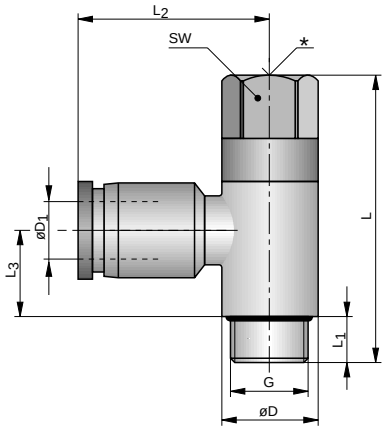

* Throttle screw

Screw-In Throttle Non-Return Valve with Push-On Connector - Type SEDRV....A
Dimension Table (mm) and Order Instructions

Order Instructions Type	Order-No.	Tube ØDA	Port size G	SW	SW1	ØD	$ØD_1$	L	L_1	L_2	L_3
SEDRV-54A	**KW 0511**	4	M5	9	-	10	10	28	5	24	5.5
SEDRV-184A	**KW 0512**	4	G1/8	12	-	14	11	37	7	25	11.5
SEDRV-55A	**KW 0513**	5	M5	9	-	10	11	28	5	25	5.5
SEDRV-185A	**KW 0514**	5	G1/8	12	-	14	12	37	7	25	11.5
SEDRV-186A	**KW 0515**	6	G1/8	12	-	14	13	37	7	26	11.5
SEDRV-146A	**KW 0516**	6	G1/4	16	-	18	13	50	9	28	15
SEDRV-188A	**KW 0517**	8	G1/8	12	-	14	15	37	7	31	11.5
SEDRV-148A	**KW 0518**	8	G1/4	16	-	18	15	50	9	31	15
SEDRV-1410A	**KW 0519**	10	G1/4	16	-	18	18	50	9	36	15

Screw-in Throttle Non-Return Valve with Union Nut - Type....A
Dimension Table (mm) and Order Instrctions

Order Instructions Type	Order-No.	Tube ØDA/DI	Port size G	SW	SW1	ØD	$ØD_1$	L	L_1	L_2	L_3
EDRV-54A	**KW 0522**	4/2	M5	9	9	10	-	28	4,5	23.5	6
EDRV-184A	**KW 0523**	4/2	G1/8	12	10	14	-	37	6	28	11.5
EDRV-185A	**KW 0524**	5/3	G1/8	12	10	14	-	37	6	28	11.5
EDRV-186A	**KW 0525**	6/4	G1/8	12	12	14	-	37	6	27.5	11.5
EDRV-146A	**KW 0526**	6/4	G1/4	16	12	18	-	50	8	30	15
EDRV-188A	**KW 0527**	8/6	G1/8	12	14	14	-	37	6	28	11.5
EDRV-148A	**KW 0528**	8/6	G1/4	16	14	18	-	50	8	31	15
EDRV-1410A	**KW 0529**	10/8	G1/4	16	16	18	-	50	8	29.5	15

Screw-In Throttle Non-Return Valve with Internal Thread- Type EDRV-....AI
Dimension Table (mm) and Order Instructions

Order Instructions Type	Order-No.	Internal Thread. D1	Port Size G	SW	SW1	ØD	$ØD_1$	L	L_1	L_2	L_3
EDRV-1818AI	**KW 0520**	G1/8	G1/8	12	-	14	13.5	37	7	20.5	11.5
EDRV-1414AI	**KW 0521**	G1/4	G1/4	16	-	18	17	50	8	29.5	15

Throttle Valve

M5-G1/2

Series DV

DV-..

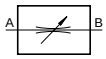

Characteristics according to VDI 3291			Pressures quoted as gauge pressure				
Characteristics	Symbol	Unit	Description				
General Features							
Type			Throttle Valve				
Mounting			Directly in tubing 2 through-bolts panel mounting				
Tube connection			Thread				
Port size			M5	G1/8	G1/4	G3/8	G1/2
Weight (mass)		kg	0.020	0.035	0.130	0.225	0.245
Installation			In any position				
Ambient temperature range	ϑ_{min} ϑ_{max}	°C °C	-20 +80	Note: When using below freezing			
Medium temperature range	ϑ_{min} ϑ_{max}	°C °C	0 +80	point (°C) it is necessary to consult us			
Medium			Filtered, lubricated or compressed air				
Lubrication			Oil mist lubrication compatible with Buna N				
Pneumatic Characteristics							
Nominal pressure	p_n	bar	6				
Operating pressure range	p_{min} p_{max}	bar bar	0.5 10				
Nominal flow when throttle is completely open	Q_N	l/min	80	125	450	1100	1200

Flow Characteristics
Type: DV-M5

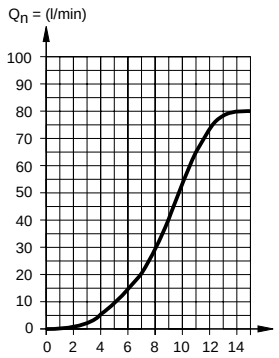

Turns of adjusting screw

Flow Characteristics
Type: DV-1/8

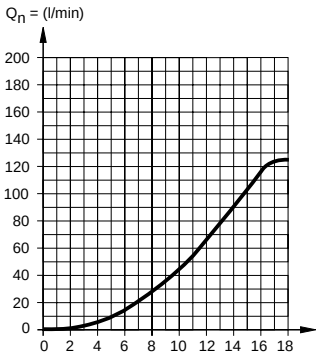

Turns of adjusting screw

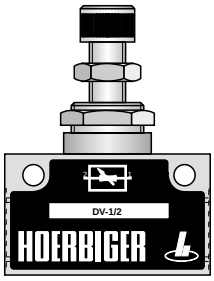

For product group list see 4.01.001E

Data Sheet No. 4.50.002E-1

A1P304E00JX00X

The right to introduce technical modifications is reserved

Flow Characteristics Type: DV-1/4

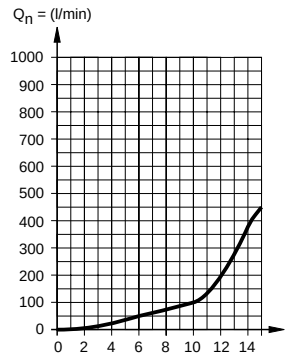

Turns of adjusting screw

Flow Characteristics Type: DV-3/8

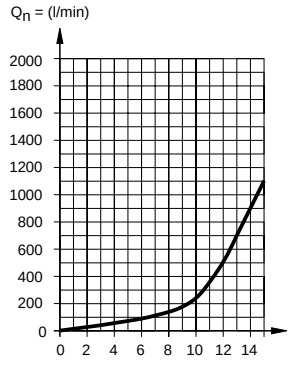

Turns of adjusting screw

Flow Characteristics Type: DV-1/2

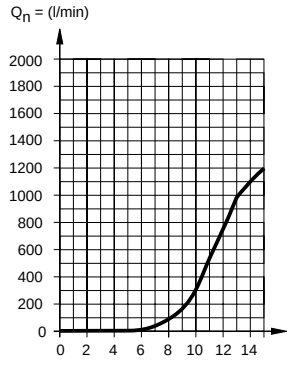

Turns of adjusting screw

Dimensions

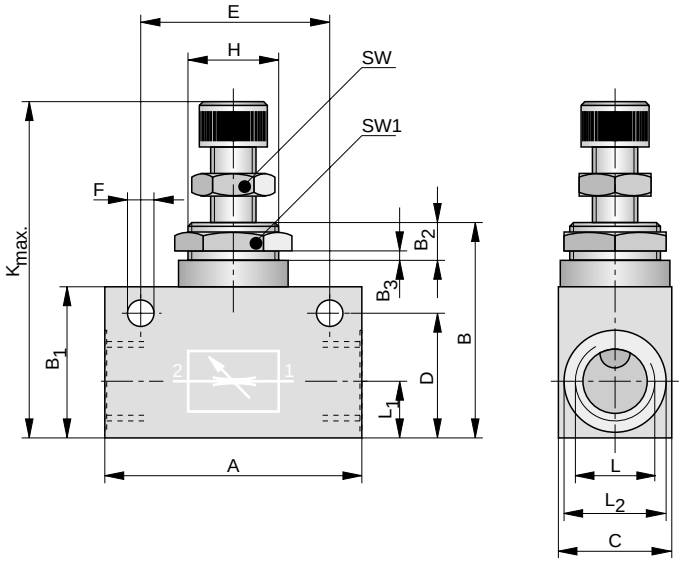

Dimension Table (mm) and Order Instructions

Order Instructions Type	Order No.	A	B	B_1	B_2	B_3	C	D	E	ØF	H	L	L1	ØL_2	K_{max}	SW	SW_1
DV-M5	**PA 10230**	26	16	26.5	6	2.5	14	12.5	18	4.4	M10x1	M5	5.5	8.5	44	7	14
DV-1/8	**PA 10231**	32.5	22	31.5	6	2.5	16	17.5	24	4.4	M12x1	G1/8	9	13.5	52	10	17
DV-1/4	**PA 12593**	55	32	48	10	4.5	25	25	35	6.5	M20x1.5	G1/4	12	19	72	13	22
DV-3/8	**PA 16141**	58	40	57	10	5.0	30	33	43	6.5	M24x1.5	G3/8	13.5	23	92	19	27
DV-1/2	**PA 16142**	68	40	57	10	5.0	30	33	50	6.5	M24x1.5	G1/2	15	27.5	92	19	27

Screw-In Throttle Valves

M5-G1/4

With tube connection

Series

EDV-....
SEDV-...

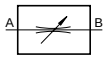

Characteristics according to VDI 3291			Pressures quoted as gauge pressure		
Characteristics	Symbol	Unit	Description		
General Features					
Type			Throttle Valve		
Mounting			Screw-in valve		
Tube connection			Thread		
Port size			M5	G1/8	G1/4
Weight (mass)		kg	0.019	0.042	0.083
Installation			in any position		
Ambient temperature range	ϑ_{min} ϑ_{max}	°C °C	-10 +70	Note: When using below freezing point (°C) it is necessary to consult us	
Medium temperature range	ϑ_{min} ϑ_{max}	°C °C	-10 +70		
Medium			Filtered compressed air		
Lubrication			Oil mist lubrication compatible with Buna N		
Pneumatic Characteristics					
Nominal pressure	p_n	bar	6		
Operating pressure range	p_{min} p_{max}	bar bar	0.5 10		
Nominal flow Throttle valve (throttle completely open)	Q_N	l/min	45	200	450

Flow Characteristics
Type: EDV/SEDV-M5

Tube Ø DI 3 mm

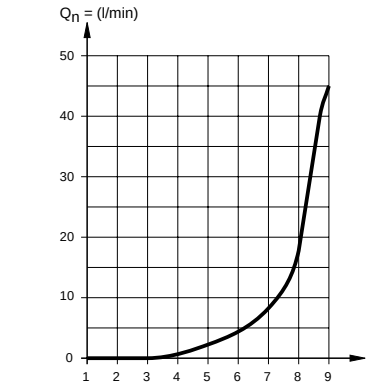

Turns of regulation spindle

Flow Characteristics
Type: EDV/SEDV-G1/8

Tube Ø DI 6 mm

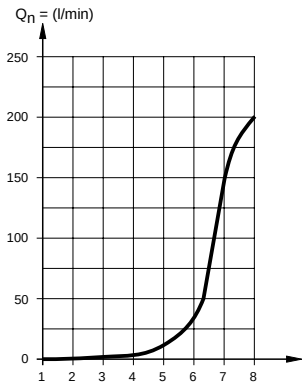

Turns of regulation spindle

Flow Characteristics
Type: EDV/SEDV-G1/4

Tube Ø DI 8 mm

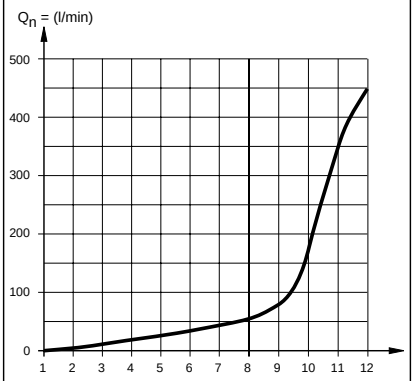

Turns of regulation spindle

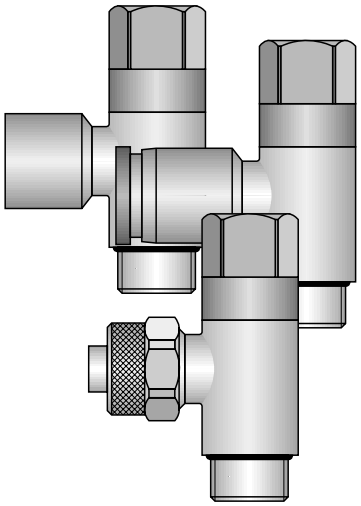

A1P523E00JX00X

The right to introduce technical modifications is reserved

Data Sheet No. 4.50.003E-1

HOERBIGER ORIGA

Screw-In Throttle Valve
Type: EDV-....CI

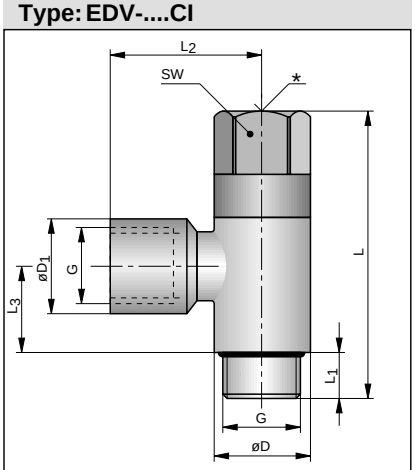

* Throttle screw

Screw-In Throttle Valve
Type: EDV-....C

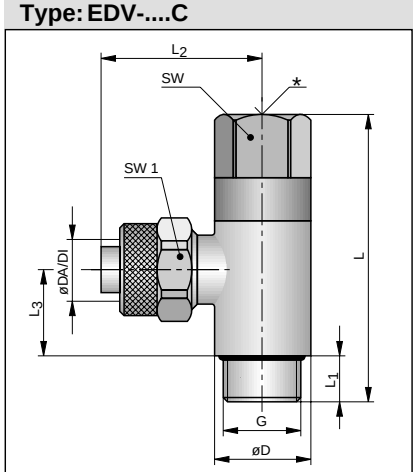

* Throttle screw

Screw-In Throttle Valve
Type: SEDV-....C

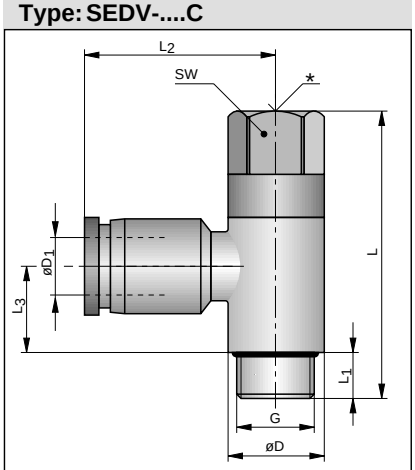

* Throttle screw

Screw-In Throttle Valve with Push-On Connector - Type SEDV-....C
Dimension Table (mm) and Order Instructions

Order Instructions Type	Order No.	Tube ØDA	Port size G	SW	SW1	ØD	$ØD_1$	L	L_1	L_2	L_3
SEDV-54C	**KW 0546**	4	M5	9	-	10	10	28	5	24	5.5
SEDV-184C	**KW 0547**	4	G1/8	12	-	14	11	37	7	25	11.5
SEDV-55C	**KW 0548**	5	M5	9	-	10	11	28	5	25	5.5
SEDV-185C	**KW 0549**	5	G1/8	12	-	14	12	37	7	25	11.5
SEDV-186C	**KW 0550**	6	G1/8	12	-	14	13	37	7	26	11.5
SEDV-146C	**KW 0551**	6	G1/4	16	-	18	13	50	9	28	15
SEDV-188C	**KW 0552**	8	G1/8	12	-	14	15	37	7	31	11.5
SEDV-148C	**KW 0553**	8	G1/4	16	-	18	15	50	9	31	15
SEDV-1410C	**KW 0554**	10	G1/4	16	-	18	18	50	9	36	15

Screw-In Throttle Valve with Union Nut - Type EDV-....C
Dimension Table (mm) and Order Instructions

Order Instructions Type	Order-No.	Tube ØDA/DI	Port size G	SW	SW1	ØD	$ØD_1$	L	L_1	L_2	L_3
EDV-54C	**KW 0557**	4/2	M5	9	9	10	-	28	4.5	23.5	6
EDV-184C	**KW 0558**	4/2	G1/8	12	10	14	-	37	6	28	11.5
EDV-185C	**KW 0559**	5/3	G1/8	12	10	14	-	37	6	28	11.5
EDV-186C	**KW 0560**	6/4	G1/8	12	12	14	-	37	6	27.5	11.5
EDV-146C	**KW 0561**	6/4	G1/4	16	12	18	-	50	8	30	15
EDV-188C	**KW 0562**	8/6	G1/8	12	14	14	-	37	6	28	11.5
EDV-148C	**KW 0563**	8/6	G1/4	16	14	18	-	50	8	31	15
EDV-1410C	**KW 0564**	10/8	G1/4	16	16	18	-	50	8	29.5	15

Screw -In Throttle Valve with Internal Thread -Type EDV-....CI
Dimension Table (mm) and Order Instructions

Order Instructions Type	Order-No.	Internal Thread D1	Port size G	SW	SW1	ØD	$ØD_1$	L	L_1	L_2	L_3
EDV-1818CI	**KW 0555**	G1/8	G1/8	12	-	14	13.5	37	7	20.5	11.5
EDV-1414CI	**KW 0556**	G1/4	G1/4	16	-	18	17	50	8	29.5	15

Screw-in Exhaust Throttle Valve

G1/8-G1/2

Series DVE

DVE-..

Dimensions (mm)

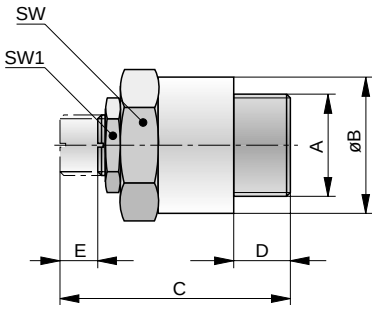

Dimension Table (mm)

Order Instructions Type	Order No.	A	B	C	D	E	SW	SW1	Weight (kg)
DVE-06	**KY 6952**	G1/8	14	24	5	4	14	9	0.010
DVE-08	**KY 6953**	G1/4	18	32	7.5	6	17	11	0.025
DVE-15	**KY 6954**	G1/2	27	45	9.5	10	27	17	0.090

Material: Brass/sintered bronze

Exhaust throttle valves which are screwed directly into the exhaust connections of valves.

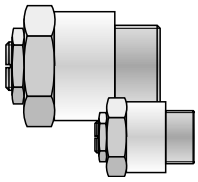

A1P247E00JX00X

The right to introduce technical modifications is reserved

For product group list see 4.01.001E

HOERBIGER ORIGA

AND-Valve

G1/8

(dual pressure valve)

Actuation: Pneumatic

Series AND

AND 8-1/8

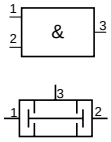

Characteristics according to VDI 3293			Pressures quoted as gauge pressure	
Characteristics	Symbol	Unit	Description	
General Features				
Type			Poppet valve	
Mounting			2 through-bolts M5	
Tube connection			Thread	
Port size			G1/8	
Weight (mass)		kg	0.05	
Installation			In any position	
Ambient temperature range	ϑ_{min} ϑ_{max}	°C °C	-20 +80	Note: When using below freezing point (°C) it is necessary to consult us
Medium temperature range	ϑ_{min} ϑ_{max}	°C °C	0 +80	
Medium			Filtered compressed air	
Lubrication			With or without oil mist lubrication	
Pneumatic Characteristics				
Nominal pressure	p_n	bar	6	
Operating pressure range	p_{min} p_{max}	bar bar	0.5 10	
Nominal flow	Q_N	l/min	134	

Dimensions (mm)

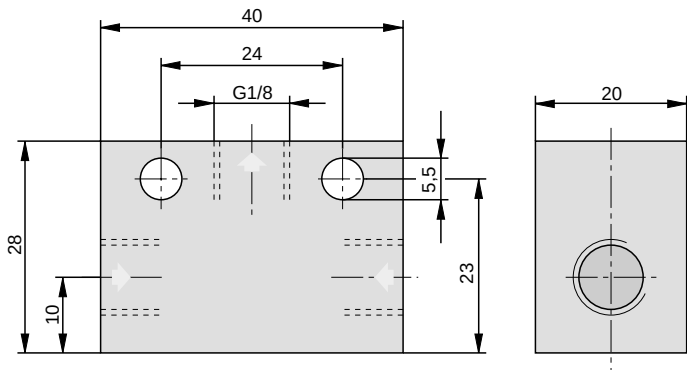

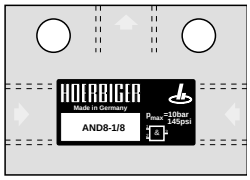

Order Instruction: AND 8-1/8 PA 10207

For product group list see 4.01.001E

Data Sheet No. 4.90.002E

A1P207E00JX00X

The right to introduce technical modifications is reserved

HOERBIGER ORIGA

AUTOMATION TECHNOLOGY

MINIATURE PNEUMATICS

SMALL COMPONENTS FOR LARGE SYSTEMS

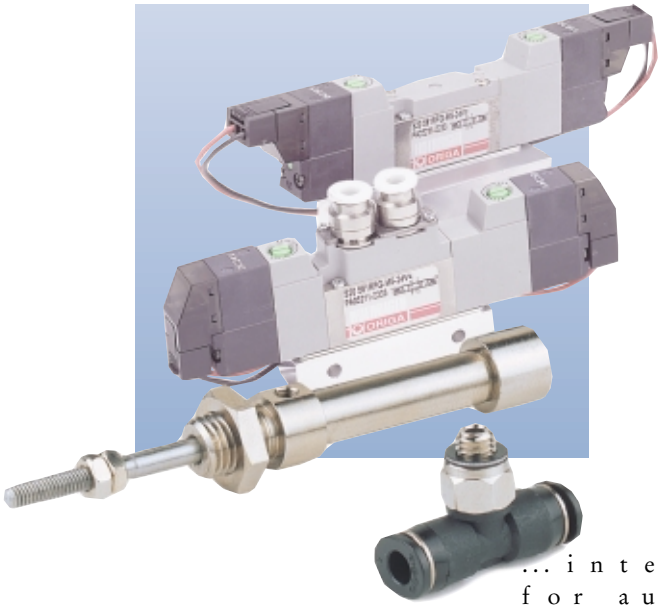

... intelligent solutions for automated movement

HOERBIGER ORIGA

New Product Range

MINIATURE PNEUMATIC SYSTEM COMPONENTS FOR SPECIAL FIELDS OF APPLICATION

Special tasks demand special automation concepts. With the addition of miniature pneumatics to their product range, HOERBIGER-ORIGA have taken a further important step in the direction of flexibility and versatility.
»Intelligent solutions for automated movement« – now also in mini-pneumatics.

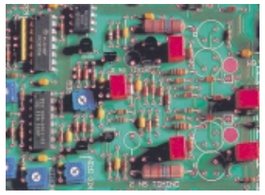

... for automated assembly work in the electronics industry

... for test procedures in the chemical industry

... for sorting processes in the pharmaceutical industry

... for assembly work in the production of optical equipment

MINIATURE PNEUMATICS FOR SPECIAL APPLICATIONS

HOERBIGER-ORIGA miniature pneumatics are ideally suited for handling small, delicate components accurately and cost effectively. Providing for a high degree of automation for sensitive handling, positioning and assembly operations, applications are common place in the electronics, textile, and packaging industries, in the manufacture of clocks and spectacles, and in pharmaceutical, medical and dentistry production.

SOLUTIONS AS IN STANDARD PNEUMATICS

The basis for HOERBIGER-ORIGA's range is their wide experience from the standard pneumatic programme.

"Everything from one source" HOERBIGER-ORIGA offers customers a complete solution – simple space saving solutions for effective and economic automation.

The idea

COMPONENTS IN A MODULAR SYSTEM: THE KEY TO THE SYSTEM SOLUTION

Cylinders, valves and accessories are the basic components of any system. With a unified range, HOERBIGER-ORIGA offers the widest choice of options and combinations, opening the door for special system solutions.

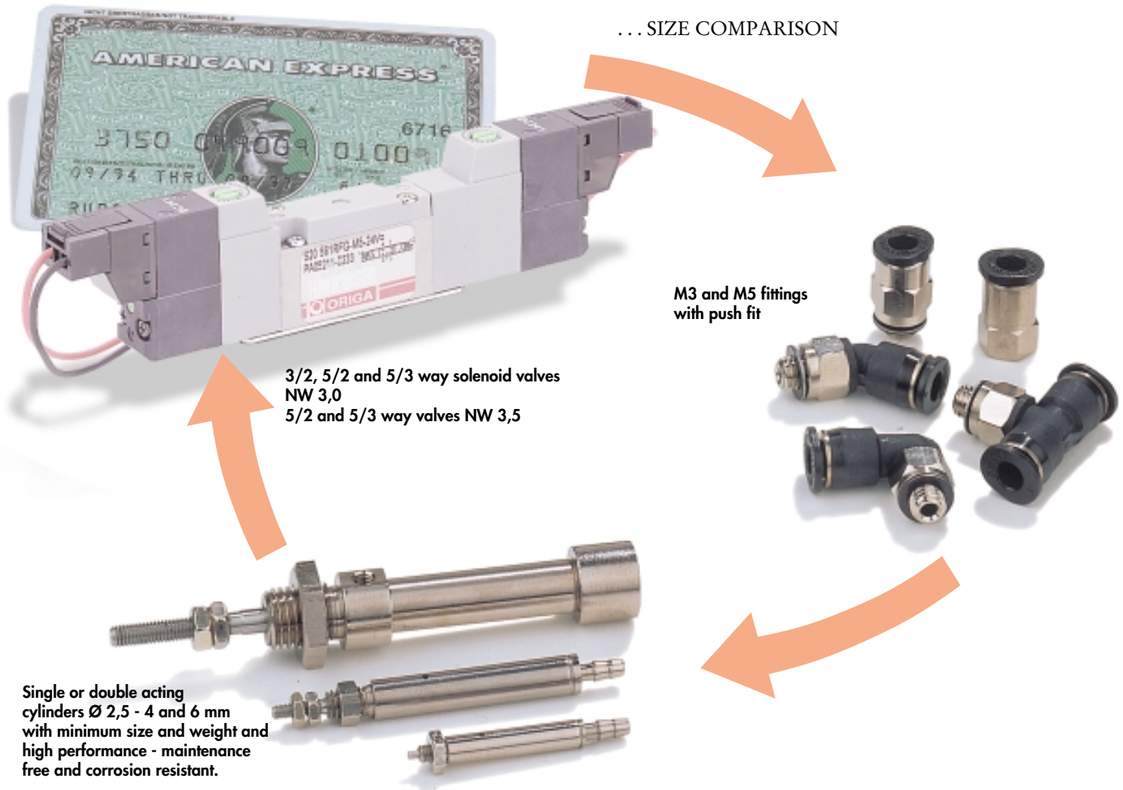

VALVES WITH AN OPTIMAL SIZE / PERFORMANCE RATIO

i.e.

- **High flow**
- **Low weight**
- **Compact size**
- **Fast switching times**
- **Low energy consumption**
- **Easy installation**
- **Multipole version with rotating connector**

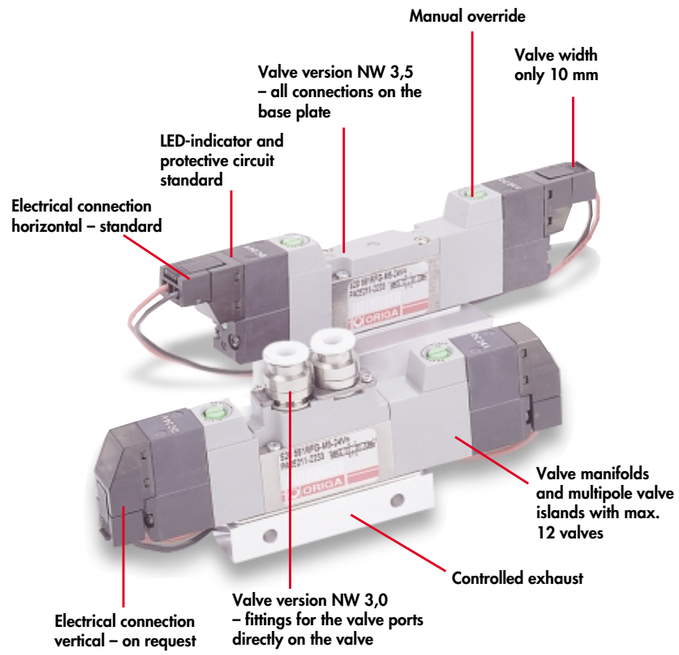

THE PRODUCT RANGE AT A GLANCE

Valves NW 3,0 with fittings on ports 4 and 2

Valve versions		
3/2 way valve	5/2 way valve	5/3 way valve

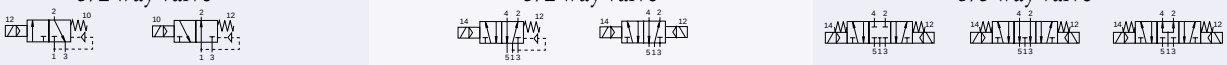

Version	Single valve without base plate	**Version** Single valve with base plate M5	Valve manifold	Valve island with multipole connector
electrical connection				
horizontal	O	O	X	X
vertical	X	X	X	X
Fittings				
Tube ODø 4 mm	X	X	X	X
Tube ODø 6 mm	O	O	X	X
Cable with connector				
Length 300 mm	–	O	X	integrated
Length 2000 mm	–	X	X	–
Voltage				
24 V DC	O	O	X	X
12 V DC	X	X	X	X

Valves NW 3,5 - all connections on baseplate

Valve versions	
5/2 way valve	5/3 way valve

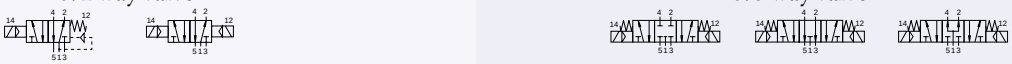

Version	Single valve without base plate	**Version** Single valve with baseplate G1/8	Valve manifold [1]	Valve island with multipole connector [1]
electrical connection				
horizontal	O	O	O	–
vertical	X	X	X	O
Fittings				
Tube ODø 4 mm	–	–	X	X
Tube ODø 6 mm	–	–	O	O
Cable with connector				
Length 300 mm	–	O	O	integrated
Length 2000 mm	–	X	X	–
Voltage				
24 V DC	O	O	O	O
12 V DC	X	X	X	X

O = Standard version
X = On request
– = not possible

[1] Valve ports (4 and 2) on the base plate with fittings, pressure supply (1) and exhausts (5 and 3) G1/8

THE PRODUCT RANGE AT A GLANCE

Cylinder ø2,5 to 6 mm – single- and double acting

Symbol	Cylinder diameter (mm)	Stroke lengths (mm)	Connection	Page
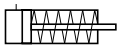	2,5	5, 10	Fitting for tubing ID 2 mm	24, 25
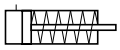	4	5, 10, 15, 20	Fitting for tubing ID 2 mm	24, 25
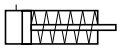	6	5,10, 15, 20, 25	M3 Internal thread	24, 25
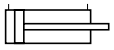	6	5,10, 15, 20, 25	M3 Internal thread	24, 25

Fittings – size M3 for tubing ODø 4 mm

Picture	Description	Page
	Tube fittings, straight - with parallel thread	26
	Threaded elbow tube fitting, short version	26
	Threaded elbow tube fitting, long version	26
	T-connector with parallel thread	26
	Y-connector, equal	27

3/2, 5/2 and 5/3 way valves NW 3,0

Base plate version

Actuation:
electrical, pilot operated
– by permanent signal
– by impulse

Series S 20

S20 381

S20 581

Versions

- Single valve without base plate
- Single valve with base plate
- Manifold version

Delivery includes:

Single valve without base plate:
1 Valve without connector
Gasket carrier with gasket
2 Mounting screws

Please order the connector separately
– see order instructions on page 23

Single valve with base plate:
1 Valve on base plate,
cable (length 300 mm)
with connector

Characteristics to VDI 3290 Pressures quoted as gauge pressures

Characteristic	Symbol	Unit	Description
General			
Type			Spool valve
Mounting			On base plate
Tube connection – Air supply and exhaust			Through base plate – M5
– Valve ports:			Fitting for tube ODø 6 mm (ø 4 mm on request)
Weight		g	≤45
Nominal diameter		mm	3,0
Installation			In any position
Ambient and medium temperature range	ϑ_{min} ϑ_{max}	°C °C	+5 +50
Medium			Filtered (5µm) compressed air or inert gases, lubricated or unlubricated.
Materials			
Housing			Al
Seals			NBR
Pneumatic Characteristics			
Nominal pressre	p_n	bar	6
Operating pressure range	p_{min} p_{max}	bar bar	2 7
Nominal flow	Q_n	l/min	205
Actuation			
Electrical			Direct
Voltage type			Direct current
Nominal voltage	U_n	V	24 (12 V on request)
Power consumption		W	0,7
Relative operating factor	ED	%	100
Electrical protection			IP 40
Insulating class			F to VDE 0580
Connection			2-pole connector, – for cable, see order instructions
Indicator light			LED in each solenoid
Protective circuit			Integrated

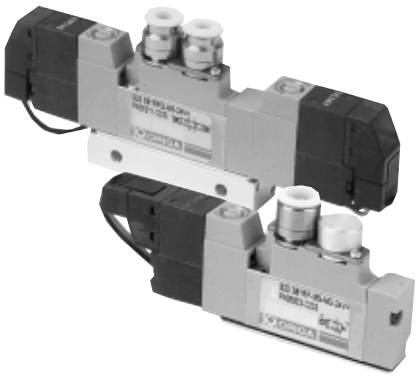

For accessories see page 23

HOERBIGER ORIGA

Dimensions (mm) – 3/2 way single valve without base plate

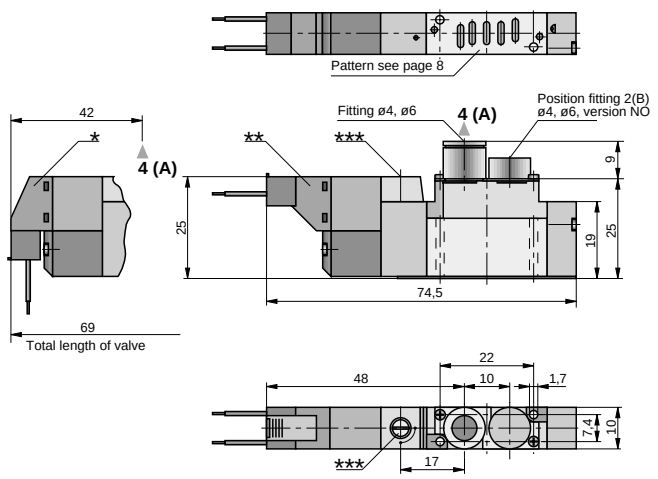

* Version with elbow electrical connector (W)
** Version with straight electrical connector
*** Manual override

Dimensions (mm) – 5/2 way single valve without base plate

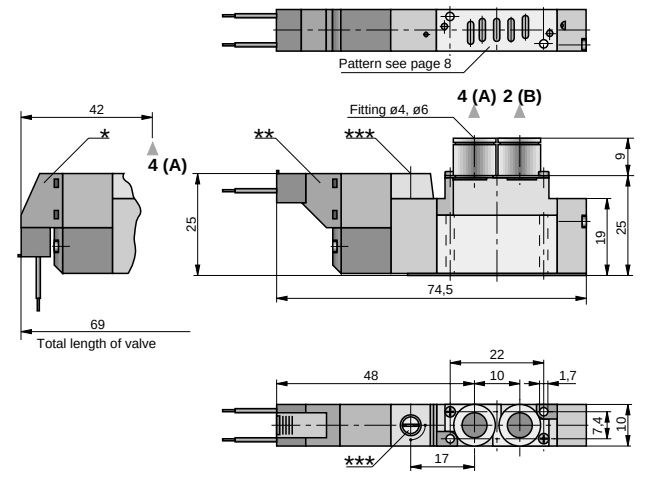

* Version with elbow electrical connector (W)
** Version with straight electrical connector
*** Manual override

Dimensions (mm) – 5/2 way single valve without base plate

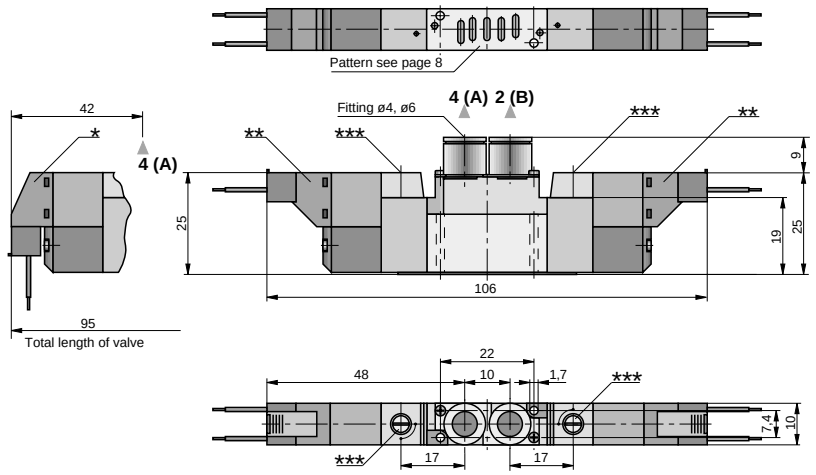

* Version with elbow electrical connector (W)
** Version with straight electrical connector
*** Manual override

3/2 way solenoid valve NW 3,0

– Base plate version

- single valve without base plate
- "normally closed" and "normally open" versions.
- with straight electrical connector
- with elbow electrical connector (W)*

Type: S20 381RRF-30NG (NO)
S20 381RRF-30NG (NO)-W*

For base plates see page 17
For RPL manifold see page 20, 21
For order instructions see page 11

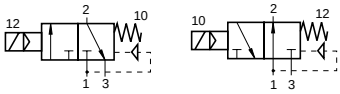

5/2 way solenoid valve (permanent signal version) NW 3,0

– Base plate version

- single valve without base plate
- with straight electrical connector
- with elbow electrical connector (W)*

Type: S20 581RRF-30
S20 581RRF-30-W*

For base plates see page 17
For RPL manifold see page 20, 21
For order instructions see page 11

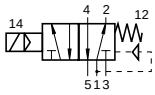

5/2 way solenoid valve (impulse version) NW 3,0

– Base plate version

- single valve without base plate
- with straight electrical connector
- with elbow electrical connector (W)*

Typ: S20 581-30
S20 581-30-W*

For base plates see page 17
For RPL manifold see page 20, 21
For order instructions see page 11

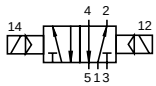

5/3 way solenoid valve (permanent signal version) NW 3,0

– Base plate version

- single valve without base plate
- with straight electrical connector
- with elbow electrical connector (W)*

Type: S20581 RF.-30
S20581 RF.-30-W*

For base plates see page 17
For RPL manifold see page 20, 21
For order instructions see page 11

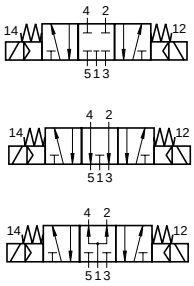

Dimensions (mm) – 5/3 way single valve without base plate

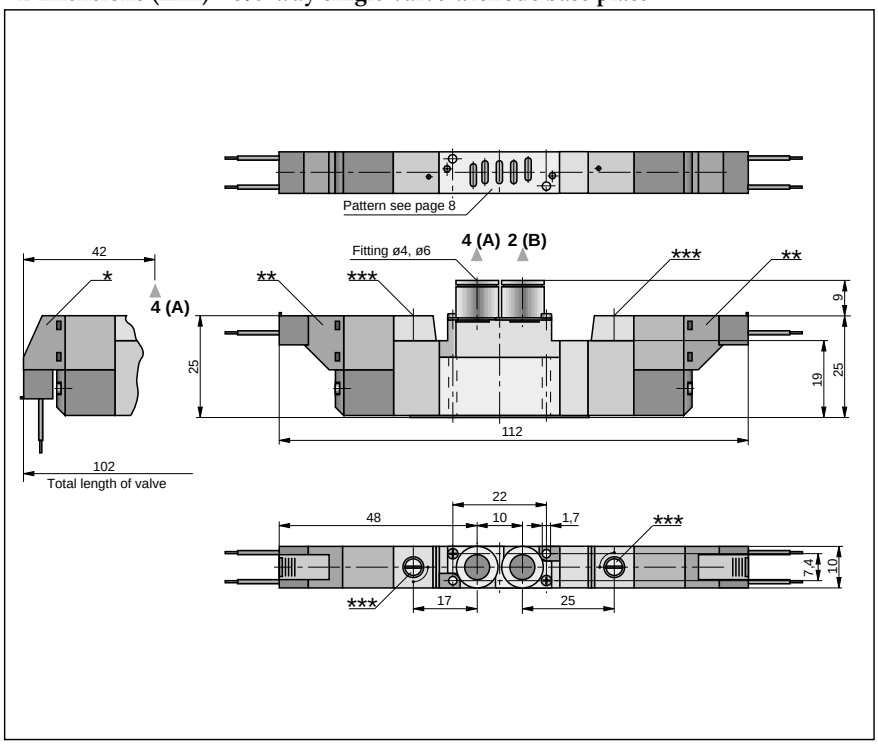

* Version with elbow electrical connector (W)
** Version with straight electrical connector
*** Manual override

Connection pattern for 3/2, 5/2 and 5/3 way solenoid valves

Dimensions (mm) – connection pattern

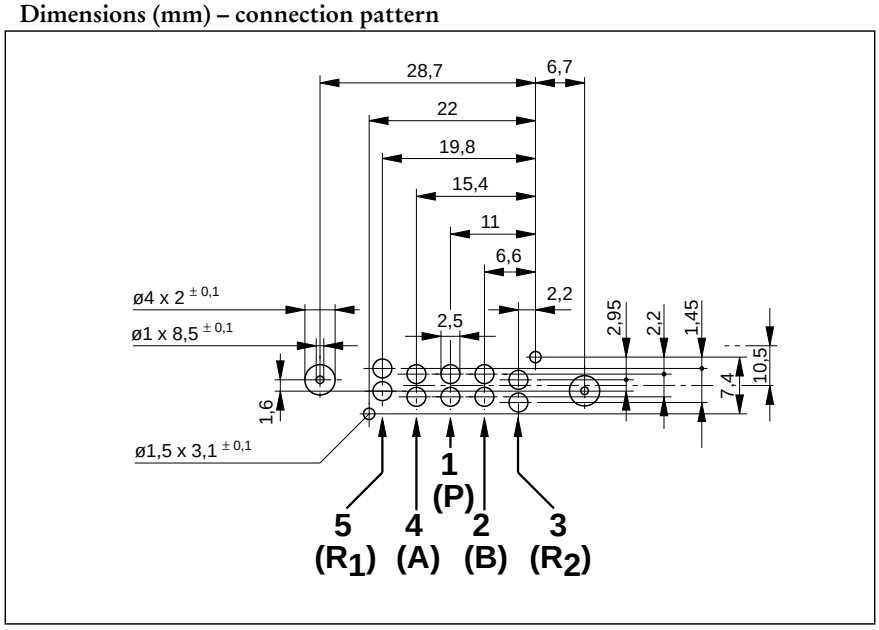

Dimensions (mm) – 3/2 way single valve with base plate M5

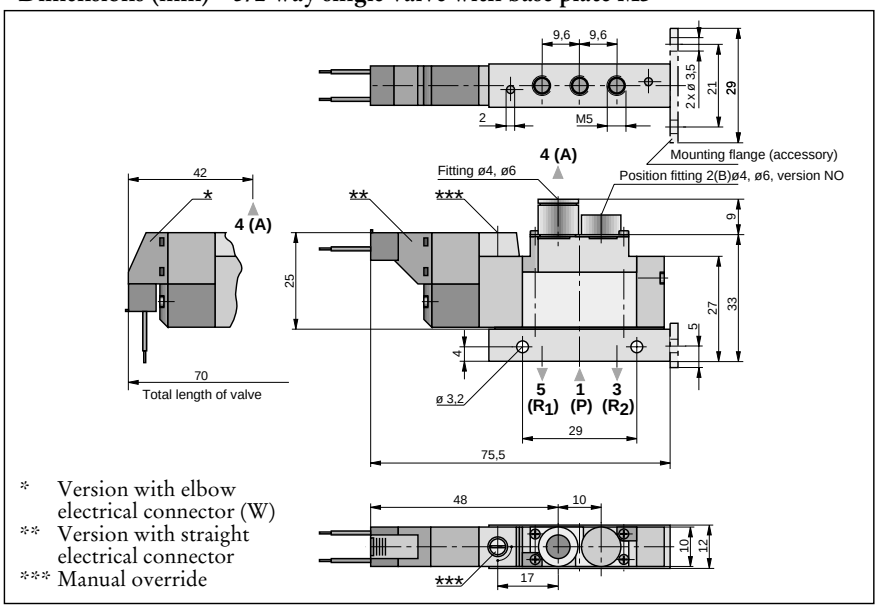

Dimensions (mm) – 5/2 way single valve with base plate M5

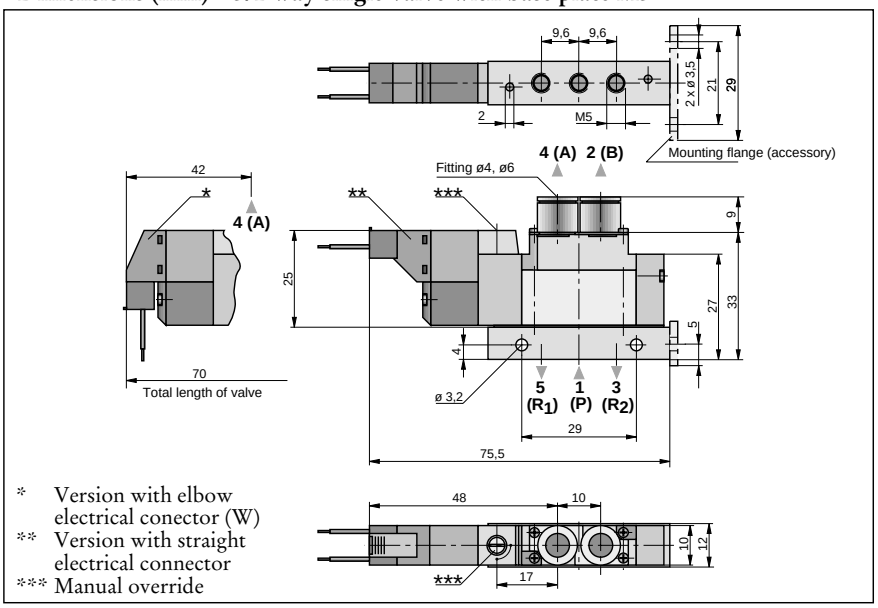

Dimensions (mm) – 5/2 way single valve with base plate M5

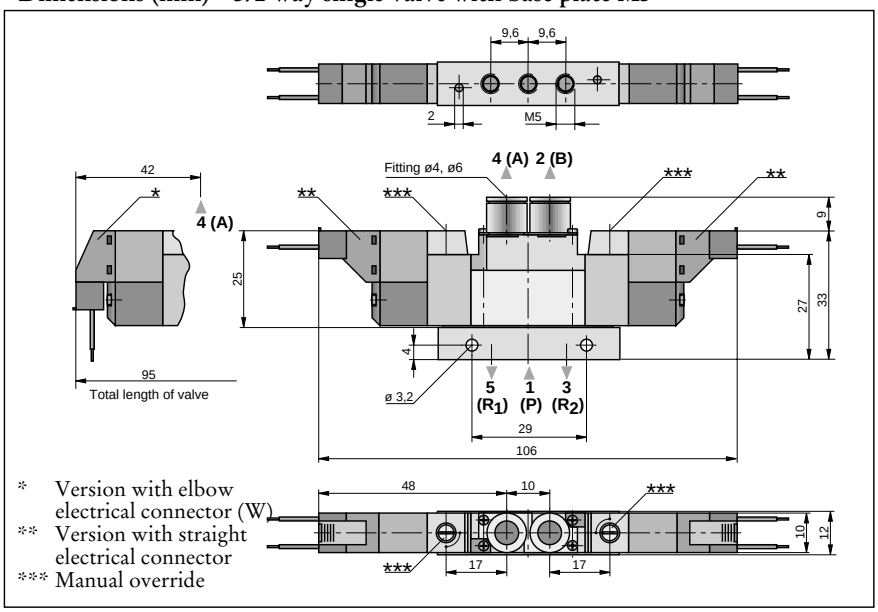

3/2 way solenoid valve NW 3,0

– Base plate version

- single valve with base plate M5
- "normally closed" and "normally open" versions
- with straight electrical connector
- with elbow electrical connector (W)*

Type: S20 381RRF-30NG (NO)-G
S20 381RRF-30NG (NO)-G-W*

For order instructions see page 11

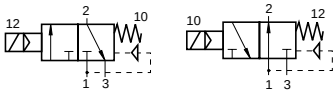

5/2 way solenoid valve (permanent signal version) NW 3,0

– Base plate version

- single valve without base plate
- with straight electrical connector
- with elbow electrical connector (W)*

Type: S20 581RRF-30-G
S20 581RRF-30-G-W*

For order instructions, see page 11

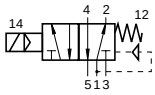

5/2 way solenoid valve (impulse version) NW 3,0

– Base plate version

- single valve without base plate
- with straight electrical connector
- with elbow electrical connector (W)*

Typ: S20 581-30-G
S20 581-30-G-W*

For order instructions, see page 11

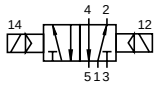

HOERBIGER ORIGA

5/3 way solenoid valve (permanent signal version) NW 3,0

– Base plate version

- single valve without base plate
- with straight electrical connector
- with elbow electrical connector (W)*

Type: S20581RF.-G
S20581RF.-G-W*

For order instructions, see page 11

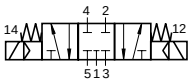

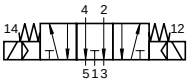

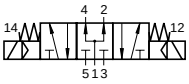

Dimensions (mm) – 5/3 way valve with base plate M5

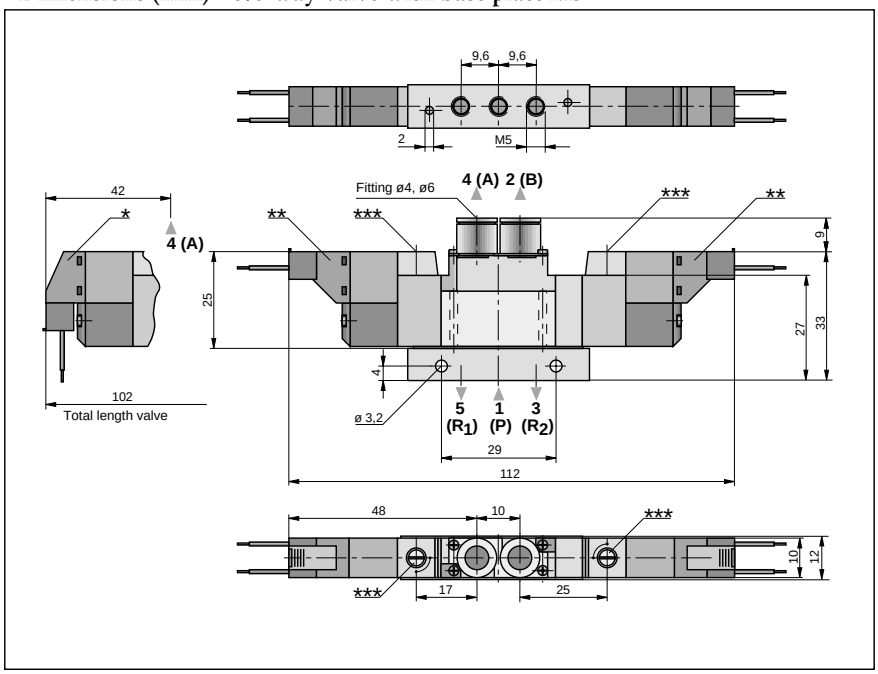

* Version with elbow electrical connector (W)
** Version with straight electrical connector
*** Manual override

Order instructions

Actuation		Version	Symbol	Order instructions Type	Order no.
electrical by permanent signal, spring return (air piloted)		- Normally closed - Without base plate - Valve ports with fittings	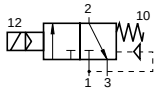	S20 381RRF-30-NG	PA 05004-0233
				S20 381RRF-30-NG-W*	PA 05004-0293
		- Normally closed - With base plate M5 - Valve ports with fittings		S20 381RRF-30-NG-G	PA 05002-0233
				S20 381RRF-30-NG-G-W*	PA 05002-0293
		- Normally open - Without base plate - Valve ports with fittings	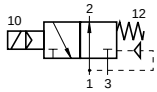	S20 381RRF-30-NO	PA 05005-0233
				S20 381RRF-30-NO-W*	PA 05005-0293
		- Normally open - With base plate M5 - Valve ports with fittings		S20 381RRF-30-NO-G	PA 05003-0233
				S20 381RRF-30-NO-G-W*	PA 05003-0293
		- Without base plate - Valve ports with fittings	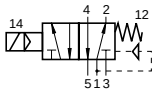	S20 581RRF-30	PA 05113-0233
				S20 581RRF-30-W*	PA 05113-0293
		- With base plate M5 - Valve ports with fittings		S20 581RRF-30-G	PA 05109-0233
				S20 581RRF-30-G-W*	PA 05109-0293
electrical, by impulse		- Without base plate - Valve ports with fittings	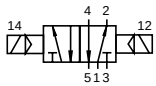	S20 581-30	PA 05114-0233
				S20 581-30-W*	PA 05114-0293
		- With base plate M5 - Valve ports with fittings		S20 581-30-G	PA 05110-0233
				S20 581-30-G-W*	PA 05110-0293
electrical, by permanent signal, spring return to middle position	Middle position closed	- Without base plate - Valve ports with fittings	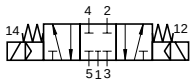	S20 581RFG-30	PA 05217-0233
				S20 581RFG-30-W*	PA 05217-0293
		- With base plate M5 - Valve ports with fittings		S20 581RFG-30-G	PA 05211-0233
				S20 581RFG-30-G-W*	PA 05211-0293
	Middle position vented	- Without base plate - Valve ports with fittings	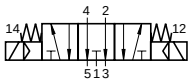	S20 581RFE-30	PA 05218-0233
				S20 581RFE-30-W*	PA 05218-0293
		- With base plate M5 - Valve ports with fittings		S20 581RFE-30-G	PA 05212-0233
				S20 581RFE-30-G-W*	PA 05212-0293
	Middle position pressurised	- Without base plate - Valve ports with fittings	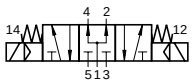	S20 581RFB-30	PA 05219-0233
				S20 581RFB-30-W*	PA 05219-0293
		- With base plate M5 - Valve ports with fittings		S20 581RFB-30-G	PA 05213-0233
				S20 581RFB-30-G-W*	PA 05213-0293

* = version with vertical electrical connector

5/2 and 5/3 way valve NW 3,5

Base plate version

Actuation:
electrical, pilot operated
– by permanent signal
– by impulse

Series S 20

S20 381

S20 581

Versions
- Single valve without base plate
- Single valve with base plate
- Manifold version

Delivery includes:

Single valve without base plate:
1 Valve without connector
Gasket carrier with gasket
2 Mounting screws

Please order the connector separately
– see order instructions on page 23

Single valve with base plate:
1 Valve on base plate,
cable (length 300 mm)
with connector

Characteristics to VDI 3290 Pressures quoted as gauge pressures

Characteristic	Symbol	Unit	Description
General			
Type			Spool valve
Mounting			On base plate
Tube connection – Air supply and exhaust			On base plate – G1/8
– Valve ports:			On base plate – G1/8
Weight		g	≤ 45
Nominal diameter		mm	3,5
Installation			In any position
Ambient and medium temperature range	ϑ_{min} ϑ_{max}	°C °C	+5 +50
Medium			Filtered (5µm) compressed air or inert gases, lubricated or unlubricated.
Materials			
Housing			Al
Seals			NBR
Pneumatic Characteristics			
Nominal pressure	p_n	bar	6
Operating pressure range	p_{min} p_{max}	bar bar	2 7
Nominal flow	Q_n	l/min	245
Actuation			
Electrical			Direct
Voltage type			Direct current
Nominal voltage	U_n	V	24 (12 V on request)
Power consumption		W	0,7
Relative operating factor	ED	%	100
Electrical protection			IP 40
Insulating class			F to VDE 0580
Connection			2-pole connector, – for cable, see order instructions
Indicator light			LED in each solenoid
Protective circuit			Integrated

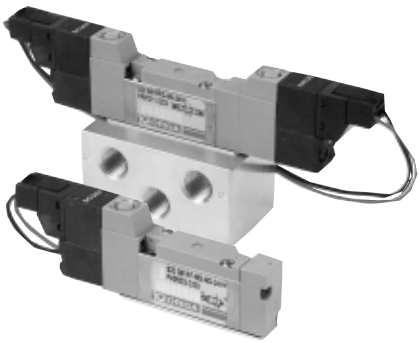

For accessories see page 23

HOERBIGER ORIGA

Dimensions (mm) – 5/2 way single valve without base plate

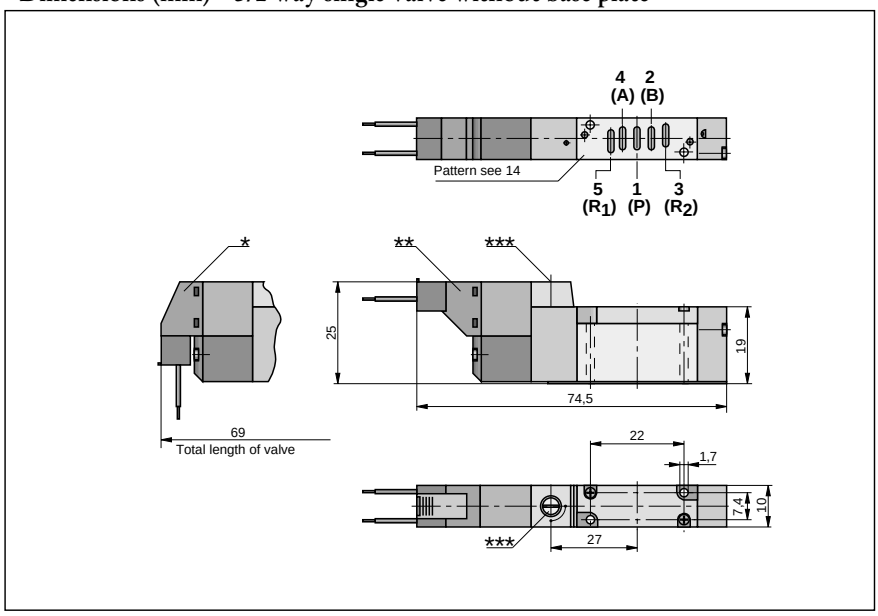

5/2 way solenoid valve (permanent signal version) NW 3,5

– Base plate version

- single valve without base plate
- with straight electrical connector
- with elbow electrical connector (W)*

Type: S20581RRF-35F
S20581RRF-35F-W*

For base plates see page 17
For RPL manifold see page 17
For order instructions see page 16

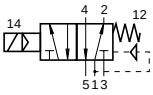

Dimensions (mm) – 5/2 way single valve without base plate

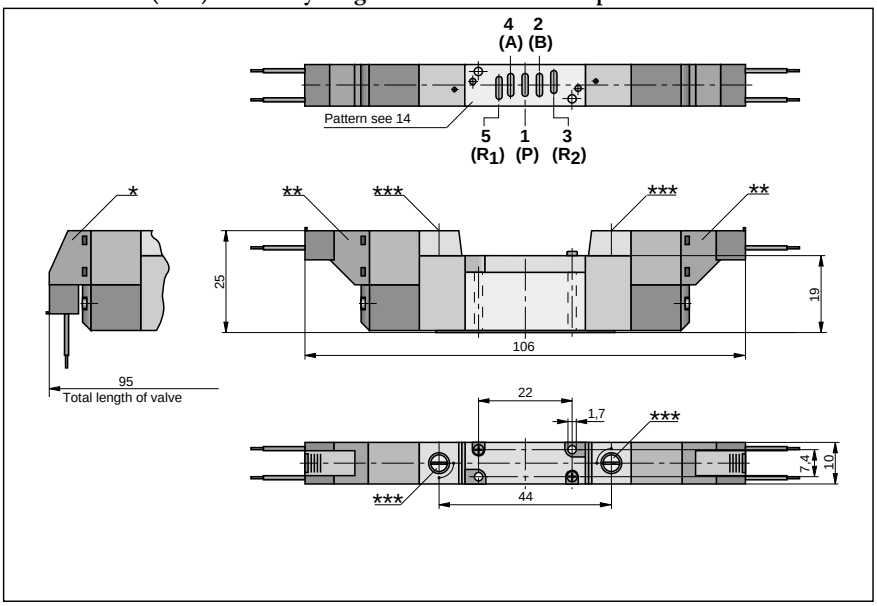

* Version with elbow electrical connector (W)
** Version with straight electrical connector
*** Manual override

5/2 way solenoid valve (impulse version) NW 3,5

– Base plate version

- single valve without base plate
- with straight electrical connector
- with elbow electrical connector (W)*

Type: S20581-35F
S20581-35F-W*

For base plates see page 17
For RPL manifold see page 17
For order instructions see page 16

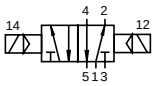

5/3 way solenoid valve (permanent signal version) NW 3,5

– Base plate version

- single valve without base plate
- with straight electrical connector
- with elbow electrical connector (W)*

Type: S20581RF.-35F
S20581RF.-35F-W*

For base plates see page 17
For RPL manifold see page 20, 21
For order instructions see page 16

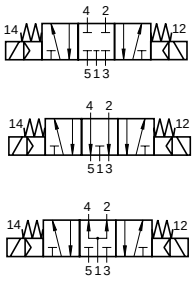

Dimensions (mm) – 5/3 way single valve without base plate

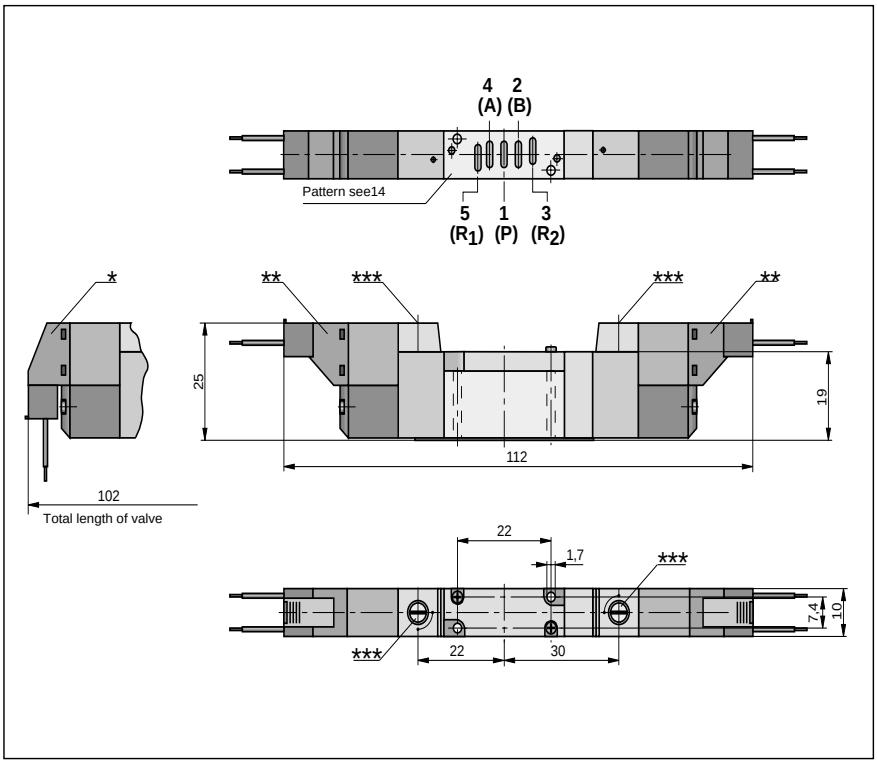

* Version with elbow electrical connector (W)
** Version with straight electrical connector
*** Manual override

Connection pattern for 5/2 and 5/3 way solenoid valve

Dimensions (mm) – Connection pattern

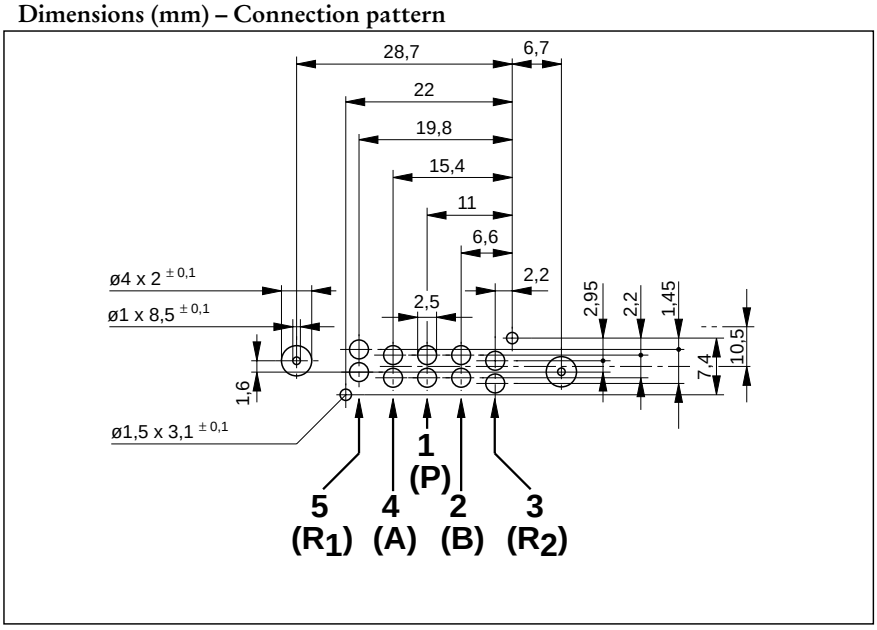

Dimensions (mm) – 5/2 way single valve with base plate G1/8

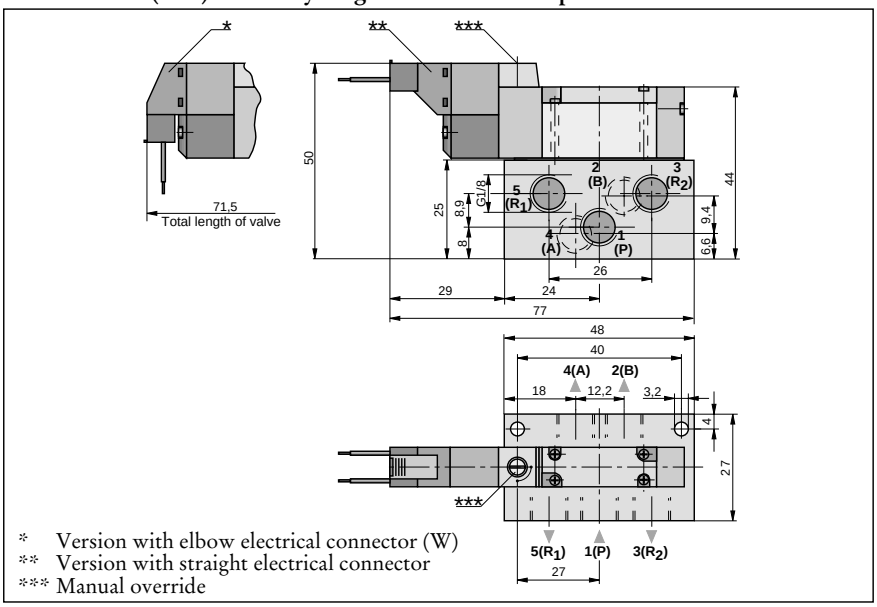

* Version with elbow electrical connector (W)
** Version with straight electrical connector
*** Manual override

5/2 way solenoid valve (permanent signal version) NW 3,5

– **Base plate version**
- single valve with base plate G1/8
- with straight electrical connector
- with elbow electrical connector (W)*

Type: S20581RRF-35F-G
S20581RRF-35F-G-W*

For order instuctions see page 16

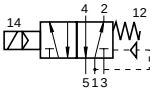

Dimensions (mm) – 5/2 way single valve with base plate G1/8

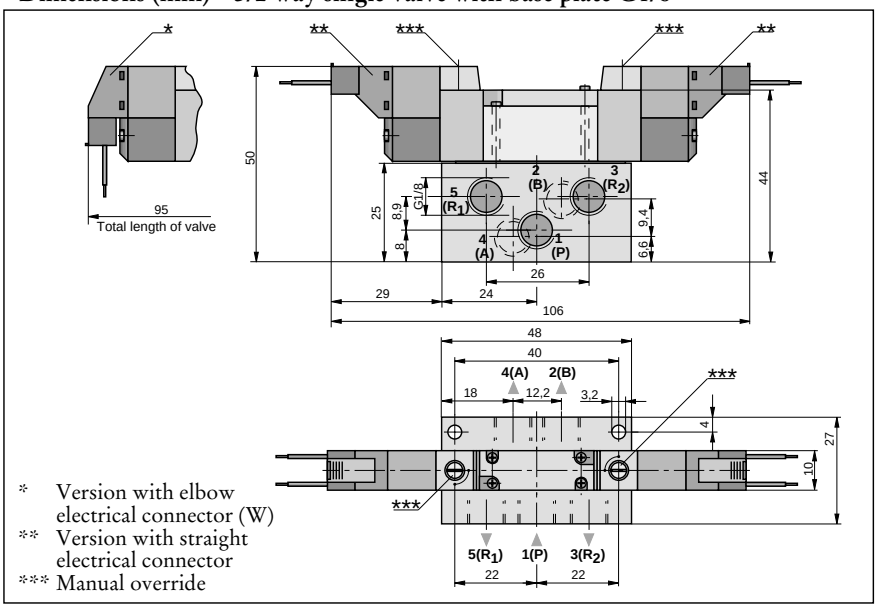

* Version with elbow electrical connector (W)
** Version with straight electrical connector
*** Manual override

5/2 way solenoid valve (impulse version) NW 3,5

– **Base plate version**
- single valve with base plate G1/8
- with straight electrical connector
- with elbow electrical connector (W)*

Type: S20581-35F-G
S20581RRF-35F-G-W*

For order instructions see page 16

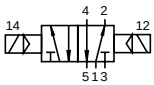

Dimensions (mm) – 5/3 way single valve with base plate G1/8

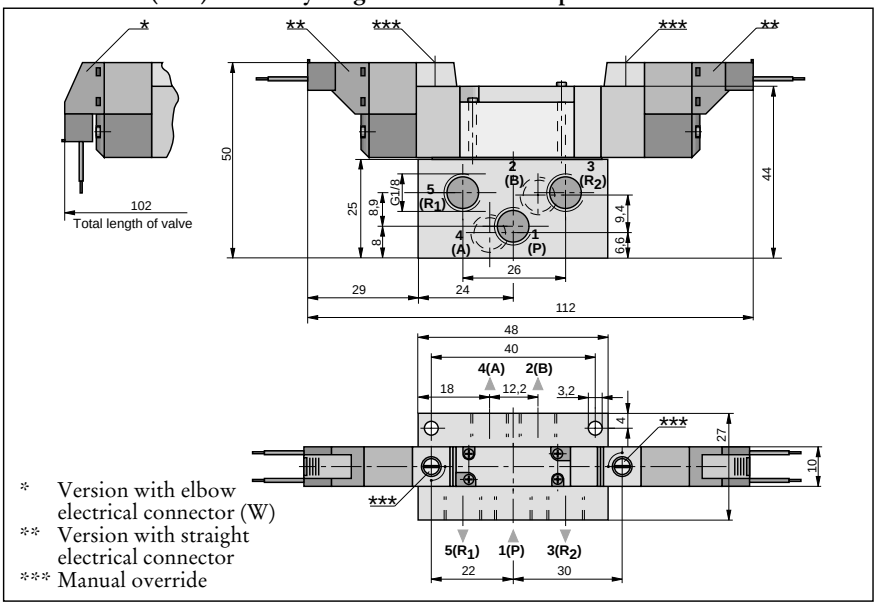

* Version with elbow electrical connector (W)
** Version with straight electrical connector
*** Manual override

5/3 way solenoid valve (permanent signal version) NW 3,5

– **Base plate version**
- single valve with base plate G1/8
- with straight electrical connector
- with elbow electrical connector (W)*

Type: S20581RF.-35F-G
S20581RRF-35F-G-W*

For order instructions see page16

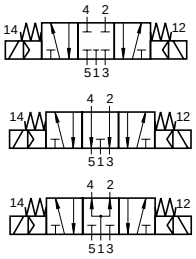

Order instructions

Actuation		Version	Symbol	Order Instructions Type	Order no.
electrical by permanent signal, spring return (air piloted)		- Flange version without base plate	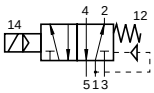	**S20 581RRF-35F**	**PA 05115-0233**
				S20 581RRF-35F-W*	**PA 05115-0293**
		- Flange version with base plate G1/8		**S20 581RRF-35F-G**	**PA 05111-0233**
				S20 581RRF-35F-G-W*	**PA 05111-0293**
electrical by impulse		- Flange version without base plate	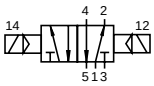	**S20 581-35F**	**PA 05116-0233**
				S20 581-35F-W*	**PA 05116-0293**
		- Flange version with base plate G1/8		**S20 581-35F-G**	**PA 05112-0233**
				S20 581-35F-G-W*	**PA 05112-0293**
electrical by permanent signal, spring return to middle position	Middle position closed	- Flange version without base plate	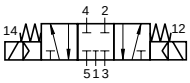	**S20 581RFG-35F**	**PA 05220-0233**
				S20 581RFG-35F-W*	**PA 05220-0293**
		- Flange version with base plate G1/8		**S20 581RFG-35F-G**	**PA 05214-0233**
				S20 581RFG-35F-G-W*	**PA 05214-0293**
	Middle position vented	- Flange version without base plate	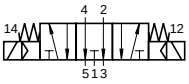	**S20 581RFE-35F**	**PA 05221-0233**
				S20 581RFE-35F-W*	**PA 05221-0293**
		- Flange version with base plate G1/8		**S20 581RFE-35F-G**	**PA 05215-0233**
				S20 581RFE-35F-G-W*	**PA 05215-0293**
	Middle position pressurised	- Flange version without base plate	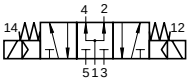	**S20 581RFB-35F**	**PA 05222-0233**
				S20 581RFB-35F-W*	**PA 05222-0293**
		- Flange version with base plate G1/8		**S20 581RFB-35F-G**	**PA 05216-0233**
				S20 581RFB-35F-G-W*	**PA 05216-0293**

* = Version with vertical electrical connector

Dimensions (mm) – single base plate M5

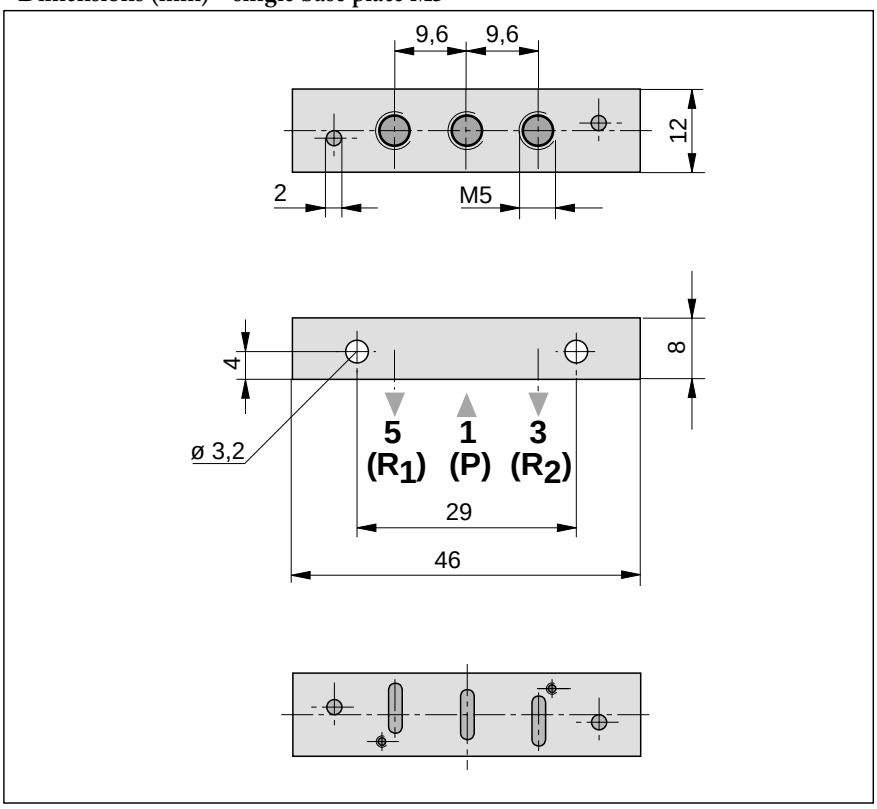

Order instruction: Type S20-30-S Order no. Nr. KL8017

Single base plates for 3/2, 5/2 and 5/3 way solenoid valves NW 3,0

- Single base plate M5 – for valves NW 3,0

Type: S20-30-S

Dimensions (mm) – single base plate G1/8

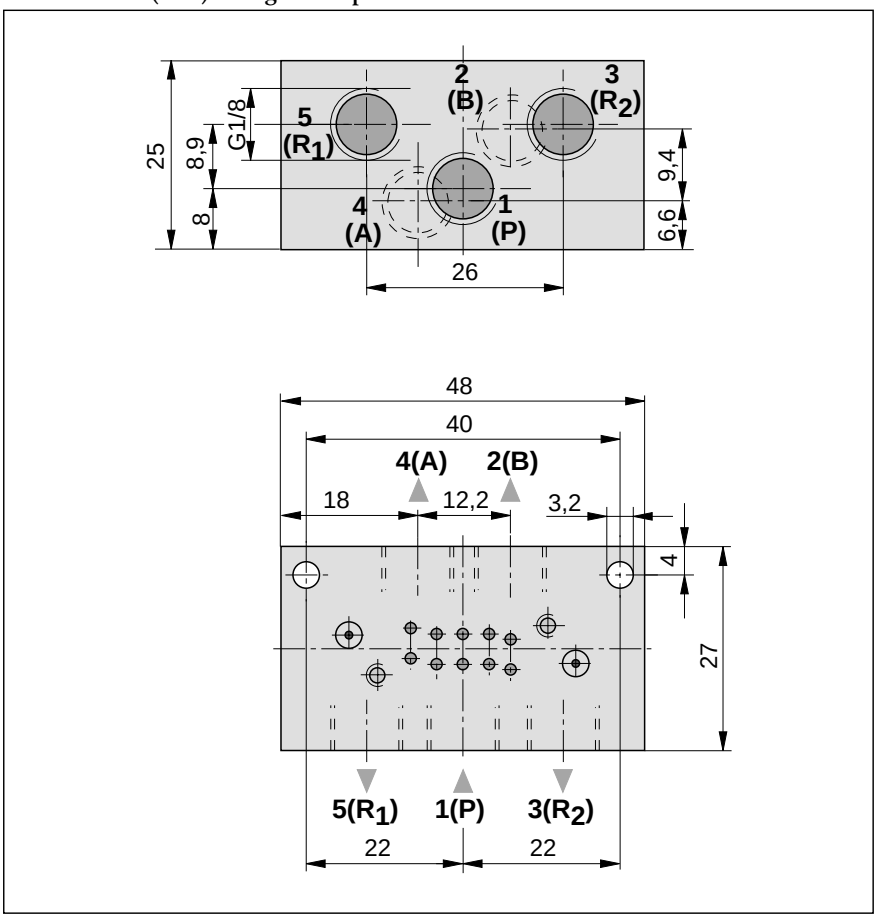

Order instruction: Type S20-35-S Order no. KL8018

Single base plates for 5/2 and 5/3 way solenoid valve NW 3,0 and 3,5

- Single base plate G1/8 – for valves NW 3,5

Type: S20-35-S

HOERBIGER ORIGA

5/2 and 5/3 way solenoid valve NW 3,5

– Manifold version for individual wire operation, completely assembled

- valve ports on the base plate (fittings)
- with straight electrical connector
- with elbow electrical connector

Type: S20-35F

For order instructions see page 24

For further dimensions of the valves see pages 13, 14

Dimensions (mm) – manifold version, completely assembled

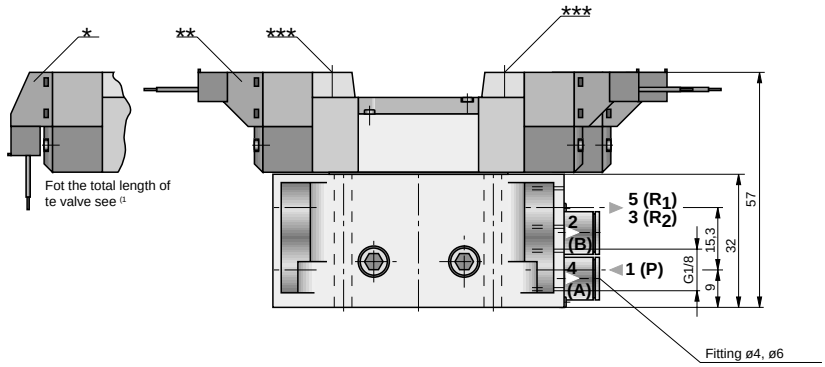

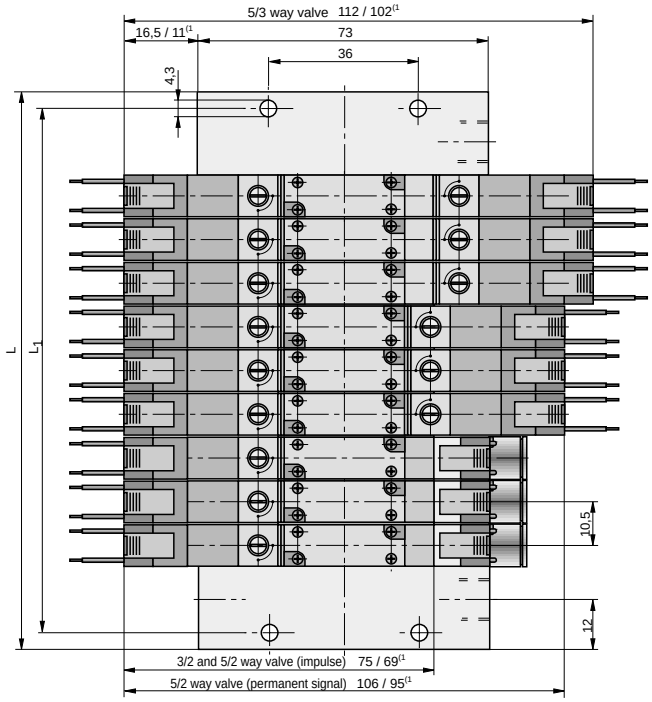

* Version with elbow electrical connector (W)
** Version with straight electrical connector
*** Manual override
(1 Valve length for version with elbow electrical connector

Dimension table (mm)

Manifold version, completely assembled

Number of Valves	Dimension L	L_1	L_2
2	61	53	36
3	71,5	63,5	46,5
4	82	74	57
5	92	84,5	67,5
6	103	95	78
7	113,5	105,5	88,5
8	124	116	99
9	134,5	126,5	109,5
10	145	137	120
11	155,5	147,5	130,5
12	166	158	141

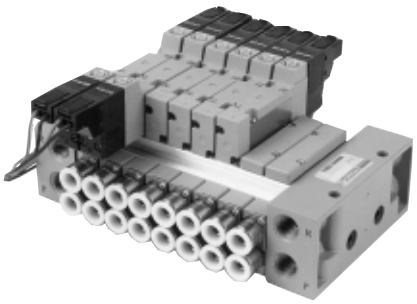

HOERBIGER ORIGA

Dimensions (mm) – base plate for valve manifolds, completely assembled

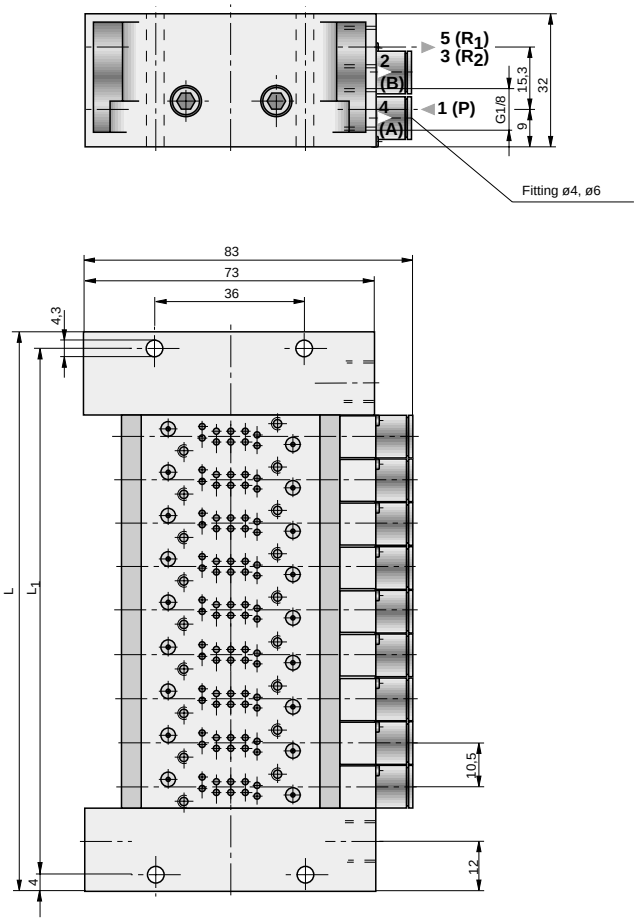

Base plate for valve manifolds

- **Base plate with fittings for valve ports**
  - **for individual wire operation**
  - **completely assembled**
  - valve ports on the base plate (fittings)
  - with straight electrical connector
  - with elbow electrical connector

Type: S20-35F-G

For order instructrions see page 24

For further dimensions of the valve s see pages 13, 14

Dimension table (mm)
Manifold version, completely assembled

Number of Valves	Dimension L	L_1	L_2
2	61	53	36
3	71,5	63,5	46,5
4	82	74	57
5	92	84,5	67,5
6	103	95	78
7	113,5	105,5	88,5
8	124	116	99
9	134,5	126,5	109,5
10	145	137	120
11	155,5	147,5	130,5
12	166	158	141

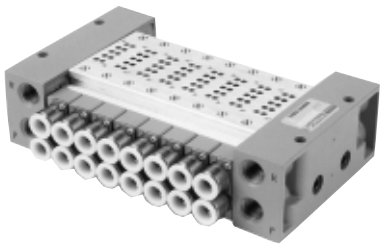

HOERBIGER ORIGA

5/2 and 5/3 way solenoid valve NW 3,5

– Manifold version with Sub-D multipole connector, completely assembled

- valve ports on the base plate (fittings)
- with elbow electrical connector

Type: IM-35F-W

For order instructions see page 22

For further dimensions of the valve s see pages 13, 14

Dimensions (mm) – manifold version, completely assembled

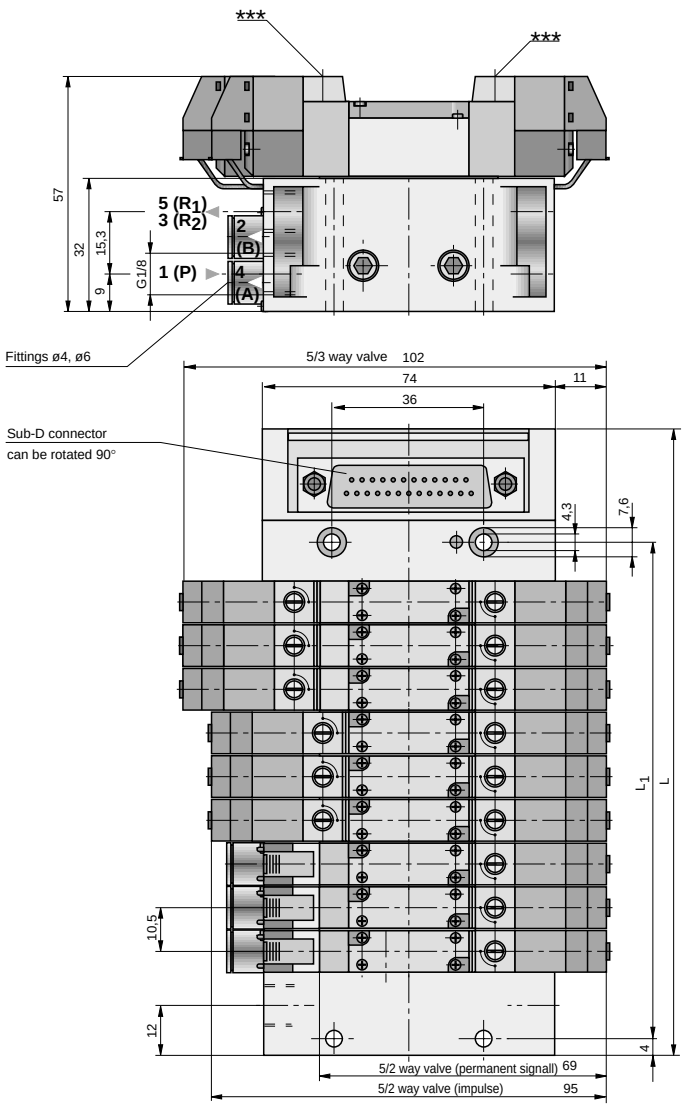

*** Manual override

Dimension table (mm)
Manifold version, completely assembled

Number of Valves	Dimension L	L_1
2	82	46
3	92,5	56,5
4	103	67
5	113,5	77,5
6	124	88
7	134,5	98,5
8	145	109
9	155,5	119,5
10	166	130
11	176,5	140,5
12	187	151

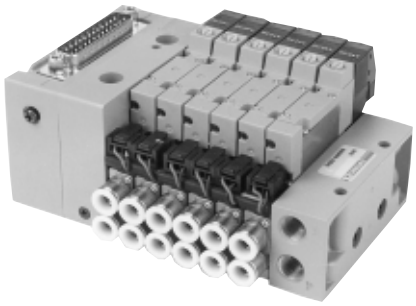

HOERBIGER ORIGA

Dimensions (mm) – base plate for manifolds, completely assembled

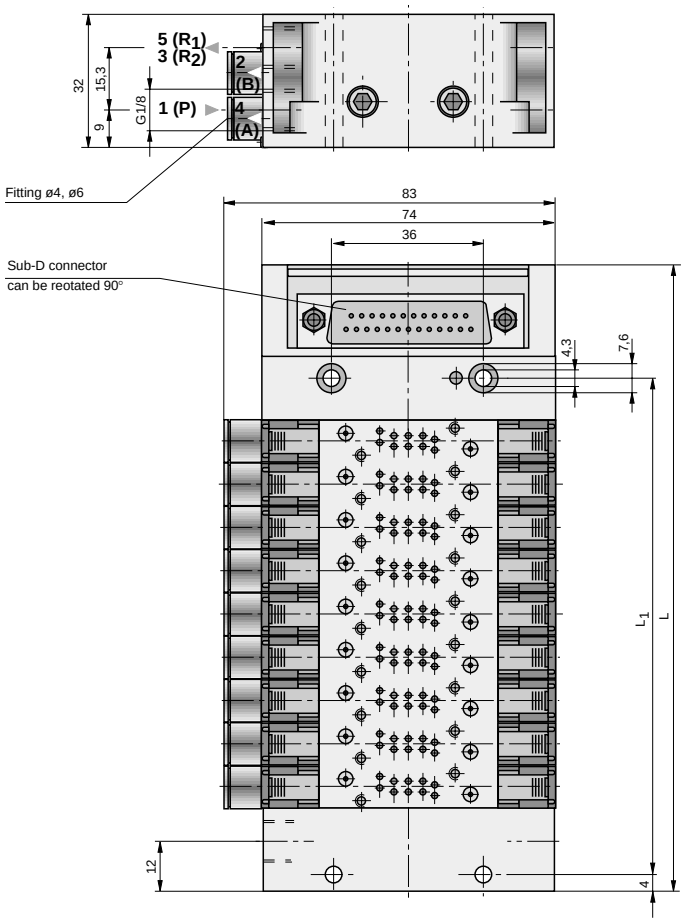

Base plate for manifolds

– Base plate with fittings for valve ports
- with Sub-D Multipole connector
- completely assembled

Type: IM-35F-G

For order instructions see 22

For further dimensions of the valves see pages 13, 14

Dimension table (mm)
Manifold version, completely assembled

Number of Valves	Dimension L	L_1
2	82	46
3	92,5	56,5
4	103	67
5	113,5	77,5
6	124	88
7	134,5	98,5
8	145	109
9	155,5	119,5
10	166	130
11	176,5	140,5
12	187	151

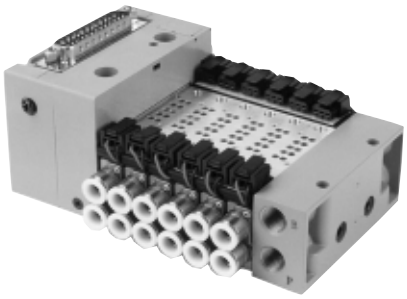

HOERBIGER ORIGA

Order instructions for valve manifolds and valve islands

Order example:
Valve island with multipole connector, 12 fold equipped with:
3 off 5/3 way valves S20 581RFG-35F
3 off 5/3 way valves S20 581RFB-35F
1 off 5/3 way valves S20 581RFE-35F
3 off 5/2 way valves S20 581-35F
3 off 5/2 way valves S20 581RRF-35F

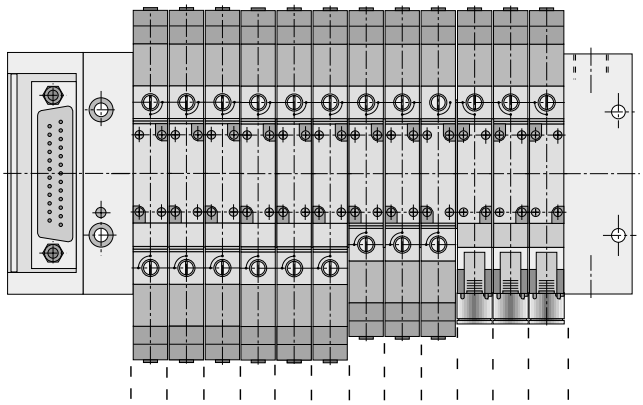

	Order no.							No. of valves		Valve position												
										1	2	3	4	5	6	7	8	9	10	11	12
Order example	P	A	0	5	3	0	2	1	2	G	G	G	B	B	E	J	J	J	G	G	G

For a neutral order key for your order, see page 29

4 6 8 10 12
only equal number of valve positions possible.

Please make sure to specify the codes for the correct valve types.

Valve manifolds (fittings for ODø 6mm)*		
PA 05303	Electrical connection: horizontally, fittings on the base plate (2+4), NW 3,5 Type: S20-35F	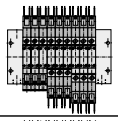
PA 05302 (on request)	Electrical connection: horizontally, fittings directly on the valve (2+4), NW 3,0 Type: S20-30	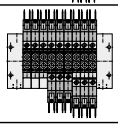

Valve islands with multipole connector (fittings for ODø 6mm)*		
PA 05306	Valve without ports 2+4 all connections in the base plate Type: IM-35F-W	
PA 05301 (on request)	Valve with fittings (ports 2+4) ports 1, 3, 5 in the base plate, Type: IM-30-W	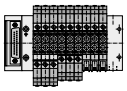

* Versions with fittings ODø 4 mm on request

Base plate complete, for valve manifold – without valves, type: S20-35F-G		
PD 44232	For valves without ports 2+4 all connections in the base plate with fittings ODø 6 mm –	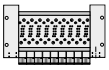
PD 44233 (on request)	with fittings ODø 4 mm	
PD 44231 (on request)	without fittings	
Base plate complete, for valve islands – without valves, type: IM-35F-G		
PD 44235	Multipole version all connections in the base plate with fittings ODø 6 mm	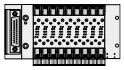
PD 44236 (on request)	with fittings ODø 4 mm	
PD 44234 (on request)	without fittings	

Order code for valves and blanking plates			
Code	Symbol	Description	Data sh.
A	–	Blanking plate on valve pos.	Page 23
M	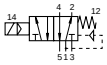	5/2 way solenoid valve, permanent signal with spring return (air piloted) Type: S20 581RRF-...	Page 7, 13
J	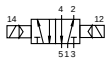	5/2 way solenoid valve, by impulse Type: S20 581-...	Page 7, 13
G	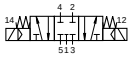	5/3 way solenoid valve, spring return to middle position, middle position closed Type: S20 581RFG-...	Page 8, 14
B	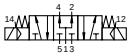	5/3 way solenoid valve, spring return to middle position, middle position pressurised Type: S20 581RFB-.../..	Page 8, 14
E	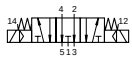	5/3 way solenoid valve, spring return to middle position, middle position vented Type: S20 581RFE-...	Page 8, 14
C	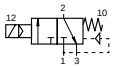	3/2 way solenoid valve, by permanent signal with spring return (air piloted), normally closed Type: S20 381RRF-..-NG	Page 7
O	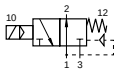	3/2 way solenoid valve, by permanent signal with spring return (air piloted), normally open Type: S20 381RRF-..-NO	Page 7

Number of valves	
04	up to 4 valves
06	5 and 6 valves
08	7 and 8 valves
10	9 and 10 valves
12	11 and 12 valves

Accessories
– for solenoid valves NW3,0 and 3,5
– for valve manifolds
– for valve islands with multipole connector

- Cable with Sub-D connector
- Cable with standard connector
- Gasket
- Gasket carrier
- Blanking plate with mounting screws
- Valve mounting screws

Cable with Sub-D Connector

Picture	Cable length	Order Instructions Type	Order no.
	1,0 m	GSK-25-1	KL9012
	3,0 m	GSK-25-3	KL9013
	5,0 m	GSK-25-5	KL9014

Cable with standard connector (packages of 10 pieces)

Picture	Cable length	Order Instructions Type	Order no.
	0,3 m	GSD-2-03	KL9015
	2,0 m	GSD-2-20	KL9016

Special gasket (packages of 10 pieces)

Picture	Order Instructions Type	Order no.
	S20-30-D	KL8013

Gasket carrier (packages of 10 pieces)

Picture	Order Instructions Type	Order no.
	S20-30-M	KL8014

Blanking plate with mounting screws (packages of 5 pieces)

Picture	Order Instructions Type	Order no.
	S20-30-B	KL8015

Valve mounting screws (packages of 100 pieces)

Picture	Order Instructions Order no.
	KL8016

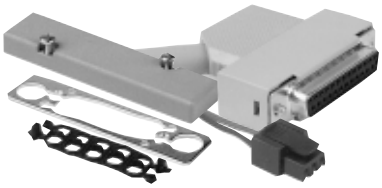

HOERBIGER ORIGA

Cylinder ø 2,5 mm single acting

Type: MR3002

Dimension table (mm)

Type	Stroke (mm)	Dimension L
MR3002	5	27,5
	10	34

Dimensions (mm) – type MR3002

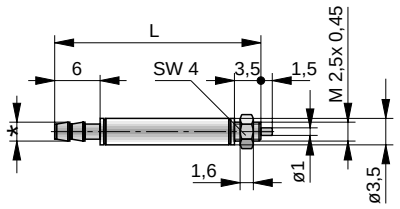

* Tubing nipple for tube DI ø 2 mm

Cylinder ø 4 mm single acting

Type: MR3004

Dimension table (mm)

Type	Stroke (mm)	Dimension L
MR3004	5	34
	10	40
	15	47
	20	52

Dimensions (mm) – type MR3004

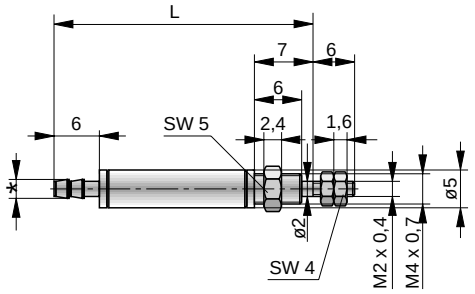

* Tubing nipple for tube DI ø 2 mm

Cylinder ø 6 mm single acting

Type: MR3006

Dimension table (mm)

Type	Stroke (mm)	Dimension L_1	L_2
MR3006	5	47	34
	10	52	39
	15	58	45
	20	65	52
	25	73	60

Dimensions (mm) – type MR3006

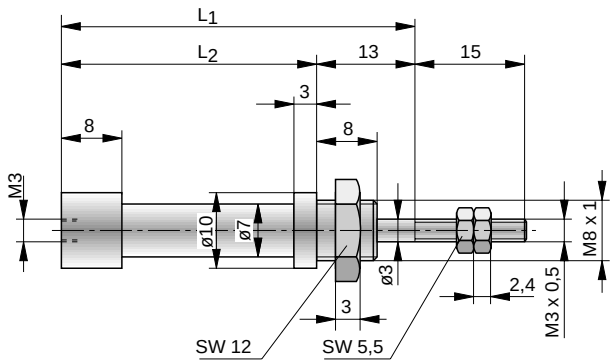

Cylinder ø 6 mm double acting

Type: MR2006

Dimension table (mm)

Type	Stroke (mm)	Dimension L_1	L_2
MR2006	5	49	34
	10	54	39
	15	59	44
	20	64	49
	25	69	54

Dimensions (mm) – type MR2006

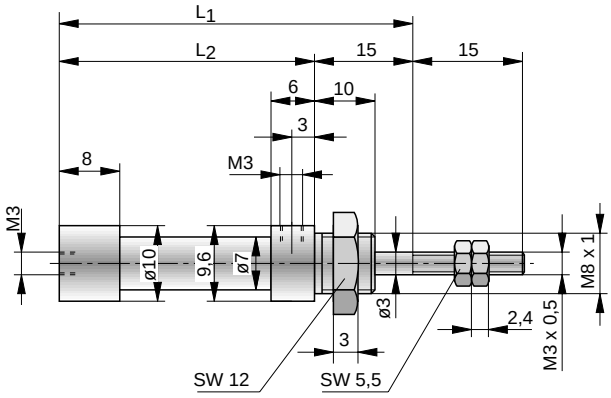

Order instructions

Series	Symbol	Piston ø (mm)	Stroke (mm)	Order Instructions Type	Order no.
single acting without cushioning	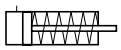	2,5	5	MR3002/005	PA67770-0005
			10	MR3002/010	PA67770-0010
		4	5	MR3004/005	PA67780-0005
			10	MR3004/010	PA67780-0010
			15	MR3004/015	PA67780-0015
			20	MR3004/020	PA67780-0020
		6	5	MR3006/005	PA67790-0005
			10	MR3006/010	PA67790-0010
			15	MR3006/015	PA67790-0015
			20	MR3006/020	PA67790-0020
			25	MR3006/025	PA67790-0025
double acting without cushioning	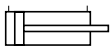	6	5	MR2006/005	PA67800-0005
			10	MR2006/010	PA67800-0010
			15	MR2006/015	PA67800-0015
			20	MR2006/020	PA67800-0020
			25	MR2006/025	PA67800-0025

Tube fitting straight

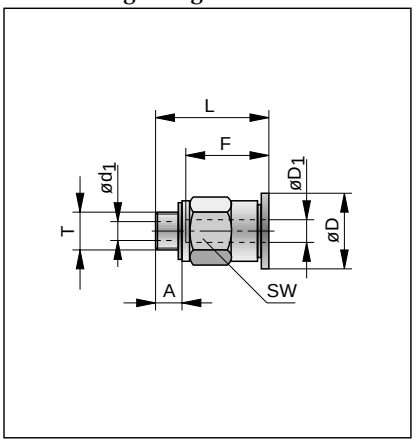

Dimension table (mm) – order instructions and weights

Order Instruction Type	Order no.	A	øD	$øD_1$(*	F	L	T	SW	$ød_1$	Wght. (g)
GS2-M3	**KL5059**	3	8	4	9,5	14	M3x0,5	8	1,5	4

* for tube outer diameter

Elbow tube fitting - short version

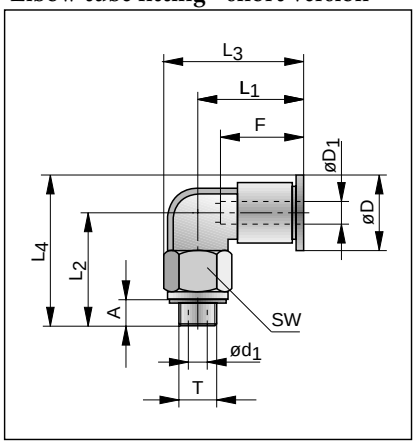

Dimension table (mm) – order instructions and weights

Order Instruction Type	Order no.	A	øD	$øD_1$ (*	F	L_1	L_2	L_3	L_4	T	SW	$ød_1$	Wght. (g)
LDS2-M3	**KL5060**	3	8	4	9,5	12,4	12,5	16,2	16,5	M3x0,5	8	1,5	2,3

* for tube outer diameter

Elbow tube fitting - long version

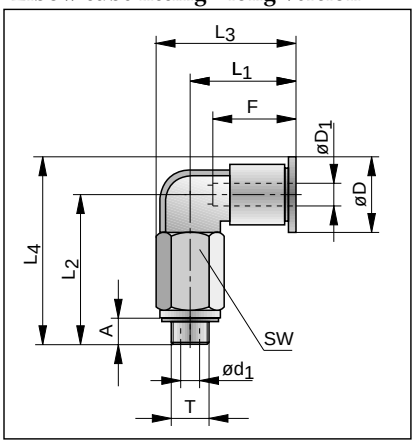

Dimension table (mm) – order instructions and weights

Order Instruction Type	Order no.	A	øD	$øD_1$ (*	F	L_1	L_2	L_3	L_4	T	SW	$ød_1$	Wght. (g)
LDSL2-M3	**KL5061**	3	8	4	9,5	12,4	24,5	16,2	28,5	M3x0,5	8	1,5	10

* for tube outer diameter

T-connector with thread

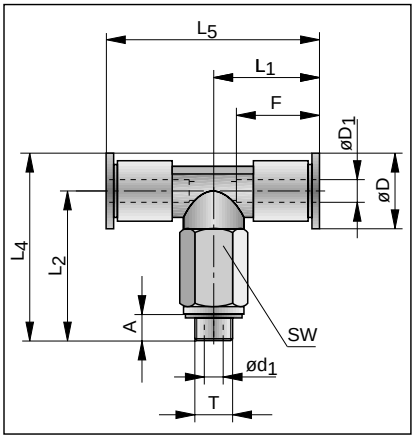

Dimension table (mm) – order instructions and weights

Order Instruction Type	Order no.	A	øD	$øD_1$ (*	F	L_1	L_2	L_4	L_5	T	SW	$ød_1$	Wght. (g)
TDS2-M3	**KL5062**	3	8	4	9,5	12,4	12,5	16,5	24,8	M3x0,5	8	1,5	2,8

* for tube outer diameter

Dimension table (mm) – order instructions and weights

Order Instruction Type	Order no.	øD	$øD_1$ (*	F	L	L_{11}	P_3	P_4	W	$ød_2$	Wght. (g)
YS-4	**KL5058**	8	3	8,5	23,7	15,7	9,5	9	8	3,2	3,4

* for tube outer diameter

Y-connector

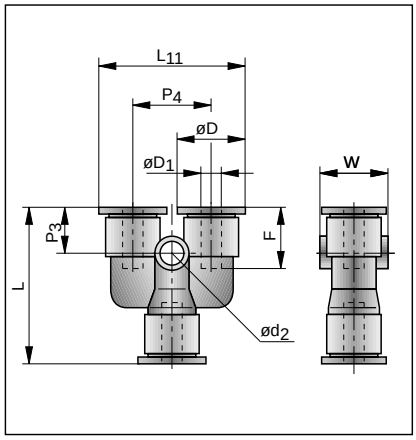

For additional fittings M5 and G1/8, please refer to the standard HOERBIGER-ORIGA fittings programm, datasheets 6.01.010E-3 to 6.01.010E-10

Order key for your orders

Order example:
Valve island with multipole connector, 12 fold equipped with:
3 off 5/3 way valves S20 581RFG-35F
3 off 5/3 way valves S20 581RFB-35F
1 off 5/3 way valves S20 581RFE-35F
3 off 5/2 way valves S20 581-35F
3 off 5/2 way valves S20 581RRF-35F

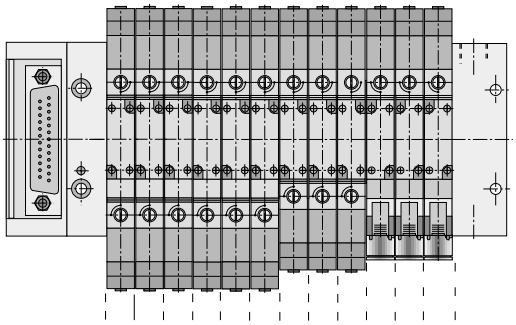

	Order no.							No. of valves		Valve position											
										1	2	3	4	5	6	7	8	9	10	11	12
Order example	P	A	0	5	3	0	2	1	2	G	G	G	B	B	E	J	J	J	G	G	G

4 → 6 → 8 → 10 → 12
only equal number of valve positions possible.

Please make sure to specify the codes for the correct valve types.

Valve manifolds (fittings for ODø 6mm)*		
PA 05303	Electrical connection: horizontally, fittings on the base plate (2+4), NW 3,5 Type: S20-35F	
PA 05302 (on request)	Electrical connection: horizontally, fittings directly on the valve (2+4), NW 3,0 Type: S20-30	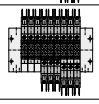

Valve islands with multipole connector (fittings for ODø 6mm)*		
PA 05306	Valve without ports 2+4 all connections in the base plate Type: IM-35F-W	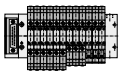
PA 05301 (on request)	Valve with fittings (ports 2+4) ports 1, 3, 5 in the base plate, Type: IM-30-W	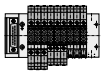

* Versions with fittings ODø 4 mm on request

Base plate complete, for valve manifold – without valves, type: S20-35F-G		
PD 44232	For valves without ports 2+4 all connections in the base plate with fittings ODø 6 mm –	
PD 44233 (on request)	with fittings ODø 4 mm	
PD 44231 (on request)	without fittings	
Base plate complete, for valve islands – without valves, type: IM-35F-G		
PD 44235	Multipole version all connections in the base plate with fittings ODø 6 mm	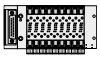
PD 44236 (on request)	with fittings ODø 4 mm	
PD 44234 (on request)	without fittings	

Order code for valves and blanking plates			
Code	Symbol	Description	Data sh.
A	–		Page 23
M			Page 7, 13
J			Page 7, 13
G	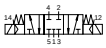		Page 8, 14
B			Page 8, 14
E			Page 8, 14
C			Page 7
O			Page 7

Number of valves	
04	up to 4 valves
06	5 and 6 valves
08	7 and 8 valves
10	9 and 10 valves
12	11 and 12 valves

Order key for order no.		
Company		
Street		
Postal code / City		
Person responsible	Tel.	Fax
Date		
Signature		

AUTOMATION TECHNOLOGY

Air Preparation Units

HOERBIGER

ORIGA

Table of Contents
Air Preparation Units

Survey

Series airfit light, G1/8-G1/4	5.09.001E
Series airfit swing, G1/8-G3/8	5.12.001E
Series airfit comfort, G3/8-G1/2	5.19.001E
Series airfit C, X, G1/4-G1/2 *discontinued*	5.20.001E
Series airfit prestige, G3/4-G1	5.22.001E
Large units G1-G2	5.50.001E
Series airfit micro, G1/8-G2	5.81.001E
Baureihe airfit dry	
–Refrigeration,Membrane and Adsorption dryer	5.82.001E
Injection lubricator systems oilfit	5.90.001E
Special units	5.95.001E
Series airfit control	5.96.001E
– electronic pressure regulating valve	

Air Preparation Units

Series airfit light, G1/8, G1/4	5.09.002E
	5.09.003E
Series airfit swing, G1/8-G3/8	5.12.002E
	5.12.003E
Series airfit comfort, G3/8-G1/2	5.19.002E
	5.19.003E
Series airfit prestige, G3/4, G1	5.22.002E
	5.22.003E

Filter-Regulators

Series airfit light, G1/8, G1/4	5.09.004E
Series airfit swing, G1/8-G3/8	5.12.004E
Series airfit comfort, G3/8-G1/2	5.19.004E
Series airfit prestige, G3/4, G1	5.22.004E

Filter-Water-Separator

Series airfit light, G1/8, G1/4	5.09.005E
Series airfit swing, G1/8-G3/8	5.12.005E
Series airfit comfort, G3/8-G1/2	5.19.005E
Series airfit prestige, G3/4, G1	5.22.005E
Series airfit magnum, G11/2, G2	5.50.002E

Pressure Regulating Valves

Series airfit light, G1/8, G1/4	5.09.006E
Series airfit swing, G1/8-G3/8	5.12.006E
– with through p_1 supply	5.12.009E
Series airfit comfort, G3/8-G1/2	5.19.006E
– with through p_1 supply	5.19.007E
– with maximum pressure limiter "airfix"	5.19.008E
Series airfit C, X, G1/4-G1/2	5.20.012E
Series airfit prestige, G3/4, G1	5.22.006E
Series airfit magnum, G11/2-G2	
– pilot operated pressure regulating valve	5.55.002E
Series airfit prestige, G3/4, G1	
– pilot operated pressure regulating valve	5.55.003E
Series airfit swing, G1/4	
– pilot operated pressure regulating valve	5.55.005E
Series airfit comfort, G3/8, G1/2	
– pilot operated pressure regulating valve	5.55.005E

Oil Mist Lubricators

Series airfit light, G1/8, G1/4	5.09.007E
Series airfit swing, G1/8-G3/8	5.12.007E
Series airfit comfort, G3/8-G1/2	5.19.011E
Series airfit swing, economy lubricator G1/4	5.12.008E
Series airfit prestige, G3/4, G1	5.22.007E

Air Preparation Accessories

Shut-off valve XDV- 3/4, 1 (Series airfit prestige)	5.21.008E
Shut-off valve CDV- 3/8,1/2 (Series airfit comfort)	5.21.014E
Shut-off valve SDV-1/4, 3/8 (Series airfit swing)	5.21.015E
Porting block kit G1/2 (Series airfit C, X) *discontinued*	5.21.001E
Porting block kit G1/4 (Series airfit light)	5.21.002E
Porting block kit G1/4 (Series airfit swing)	5.21.010E
Porting block kit G1/2 (Series airfit comfort)	5.21.012E
Bowl guard kit (Series airfit swing)	5.21.009E
Bowl guard kit (Series airfit comfort)	5.21.013E
Gauge	5.21.005E
Air hydraulic pump	5.61.001E
Special oil for pneumatic lubricators	5.61.050E
Safedrain, fully automatic drain valve	5.62.002E
Safedrain, fully automatic drain valve G1/2, G1	5.62.003E
Electronic drain valve G3/4	5.62.050E
Oil/water separation system	5.62.051E
Pressure relief valve	5.63.002E

Submicrofilters, Aktivkohlefilter, Trockner

airfit micro, G1/8-G1/4 – for series airfit light	5.81.002E
airfit micro, G1/8-G3/8 – for series airfit swing	5.81.003E
airfit micro, G3/8-G1/2 – for series airfit comfort	5.81.004E
airfit micro, G3/4-G1– for series airfit prestige	5.81.005E
airfit micro, G1-G2–submicrofilter	5.81.006E
– for series airfit magnum	
airfit micro, G1-G2–Activated carbon filter	5.81.007E
– for series airfit magnum	
airfit micro, exhaust filter-silencer G1/4-G2	5.89.002E
airfit dry	
– Adsorption dryer G1/2 - G2	5.82.002E
– Refrigeration dryer G3/8 - G2	5.82.003E
– Membran dryer G1/4	5.82.004E
– Membran dryer G1/2	5.82.005E

Special Units

Pressure regulating valve for panel mounting G1/8, G1/4	5.95.021E
Pressure regulating valve for use with water G1/8, G1/4	5.95.010E
Pressure relief valve G1/2, *discontinued*	5.95.011E
Pressure relief valve G1/8-G1/2, *discontinued*	5.95.022E
Filter-regulator for small capacity compressors G3/8	5.95.012E
Precision pressure regulating valve G1/4, *discontinued*	5.95.013E
Soft start valve airfit swing	5.95.015E
Soft start valve airfit comfort, G3/8, G1/2	5.95.020E
Stop valve airfit swing, G1/4, G3/8	5.95.016E
Stop valve airfit comfort , G3/8, G1/2	5.95.019E
Start-stop valve prestige G3/4, G1	5.95.017E
Dual pressure regulating valve G1/4	5.95.002E

Electronic pressure regulating valves airfit control

airfit tecno, G1/8	5.96.002E
XRE3,G1/4 - G1/2, *discontinued*	5.96.003E
SRE, G1/4, G3/8	5.96.004E
CRE, G3/8, G1/2	5.96.005E

Injection Lubricator Systems oilfit

Combinations	5.90.002E, 5.90.003E
	5.90.004E, 5.90.008E
Single elements	5.90.005E, 5.90.006E

Injection Lubricator Accessories

Air flow sensor	5.91.002E
Oil reservoir	5.91.003E
Plug screw	5.91.004E
Connection kit	5.91.004E
Oil tube	5.91.004E
Coupling kit	5.91.004E
Discharge element	5.91.005E
Discharge element	5.91.005E
Oil reservoir with sight glass	5.91.006E
Atomizer	5.91.008E

Centralized Lubrication System

Series airfit magnum, G1- G2	5.92.002E

HOERBIGER-ORIGA GmbH • Industriestr. 8 • D-70794 Filderstadt • Tel. +49 (0)7158 1703-0 • Fax +49 (0)7158 64870 • e-mail: dmarket@at.hoerbiger.com
HOERBIGER-ORIGA GmbH • Südliche Römerstraße 15 • D-86972 Altenstadt • Tel. +49 (0)8861 221-0 • Fax +49 (0)8861 221-1305 • e-mail: pneu@at.hoerbiger.com
HOERBIGER-ORIGA GmbH (Interface) • Diessener Straße 8 • D-86956 Schongau • Tel. +49 (0)8861 2301-0 • Fax +49 (0)8861 2301-10 • e-mail interface@at.hoerbiger.com
HOERBIGER-ORIGA Pneumatik GmbH • Dr. Alexander-Schärf-Straße 12 • A-2700 Wiener Neustadt • Tel. +43 (0)2622 26071-0 • Fax +43 (0)2622 26071-5 • e-mail: amarket@hoerbiger-origa.com
HOERBIGER-ORIGA Ltd. • Tewkesbury Industrial Estate • Tewkesbury GL 20 8 ND GB • Tel. +44 1684 85 00 00 • Fax +44 1684 85 05 55 • e-mail: sales@hoerbiger-origa.com
HOERBIGER-ORIGA AB • Kungsgatan 10, Box 67 • SE-73622 Kungsör • Tel. +46 227 411 00 • Fax +46 227 411 29 • e-mail: semarket@hoerbiger-origa.com
Internet www.hoerbiger-origa.com

PNEUMATIC
GROUP

AIR PREPARATION UNITS
G1/8, G1/4
SERIES
airfitlight

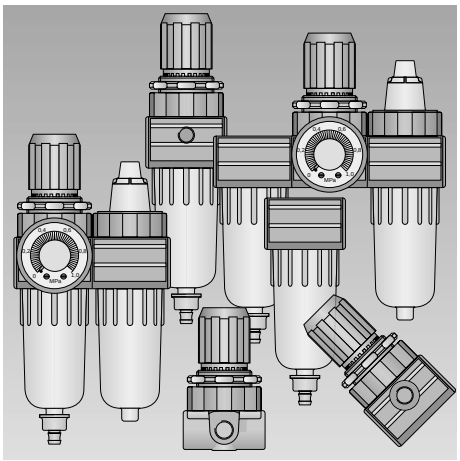

HOERBIGER
ORIGA

		Port size	Recommended flow (l/min)*	**Type**	Data Sheet No.
Air preparation units	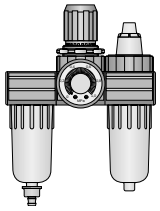	G1/8	300	**MFRLS-06**	5.09.002E
		G1/4	550	**MFRLS-08**	
	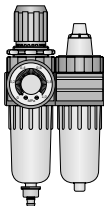	G1/8	300	**MKLS-06**	5.09.003E
		G1/4	550	**MKLS-08**	
Filter-regulator	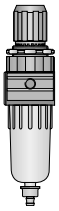	G1/8	300	**MKS-06**	5.09.004E
		G1/4	550	**MKS-08**	
Filter-water-separator		G1/8	300	**MFS-06**	5.09.005E
		G1/4	550	**MFS-08**	
Pressure regulating valve		G1/8	300	**MRP-06**	5.09.006E
		G1/4	550	**MRP-08**	
Oil mist lubricator		G1/8	300	**MLS-06**	5.09.007E
		G1/4	550	**MLS-08**	

* For max. flows see diagrams on single data sheet.
Max. flow is much higher than the given recommended flow.

A3P071E71EAA00X

The right to introduce technical modifications is reserved

Table of Contents see 5.00.001E

Air Preparation Unit

G1/8, G1/4

Degree of moisture separation >90%

airfit light

MFRLS

Characteristics			Pressures quoted as gauge pressure	
System			Air preparation unit comprising filter-water-separator, pressure regulating valve and oil mist lubricator *)	
Type			**MFRLS-06**	**MFRLS-08**
Port size			**G1/8**	**G1/4**
Max. condensate capacity		cm^3	12	
Condensate drainage			Manual or semiautomatic with pressure relief	
Max. oil capacity		cm^3	35	
Oil refilling			Manual	
Installation			Vertical	
Medium and ambient temperatures	ϑ_{min} ϑ_{max}	°C °C	0 +50 at 10 bar	
Weight (mass)		kg	0.40	
Pneumatic Characteristic				
Operating pressure range - inlet pressure	$p_{1\,min}$ $p_{1\,max}$	bar bar	0 10	
Operating pressure range - outlet pressure	$p_{2\,min}$ $p_{2\,max}$	bar bar	0.5 on request 8	0.5 0.5[3] 3 4
Recommended flow[1]	Q_n	l/min m^3/h	**300** **18**	**550** **33**
Max. flow[2]	Q_{max}	l/min m^3/h	316 19	440 27
Degree of moisture separation at recommended flow	η	%	>90	

[1] at 6.3 bar and 25 m/s
[2] at p_1 = 10 bar and p_2 = 6.3 bar, Δp = 1 bar
For further characteristics see 5.09.005E, 5.09.006E, 5.09.007E
[3] By the use of special springs, the outlet pressure can be precisely regulated in the specified p_2 range
*) Use only recommended oils with viscosity VG32 to ISO 3448 (32 mm^2/s at 40°C) or HOERBIGER special oil, Order No.: KY 8766 (Cat.-No. 5.61.050E)

Air preparation unit comprising:
Filter-water-separator
Pressure regulating valve
Oil mist lubricator
Gauge
Mounting bracket
Mounting ring

- mounting ring included
- recyclable technical polymer
- impact resistant glassfibre reinforced polymer housing (UV resistant) with metal thread inserts
- version with NPTF thread

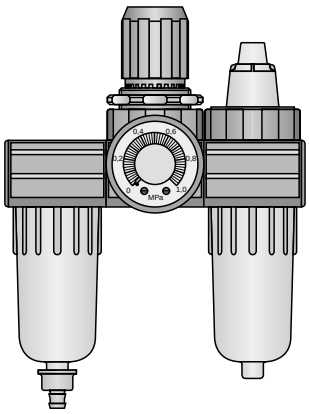

For single units see 5.09.004E-5.09.008E
For product group list see 5.09.001E

A1P430E00EAA00X

The right to introduce technical modifications is reserved

HOERBIGER ORIGA

Flow Characteristics

Type: MFRLS-08

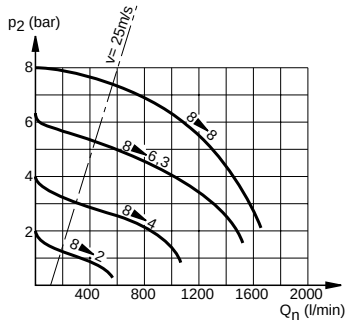

Accessories

Porting block kit G1/4
to provide unlubricated air
e.g. for air gun
for ruther details see 5.21.002E

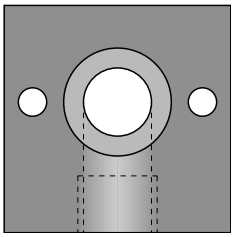

Order No.: PL 16031

Dimensions (mm)

Type: MFRLS-08

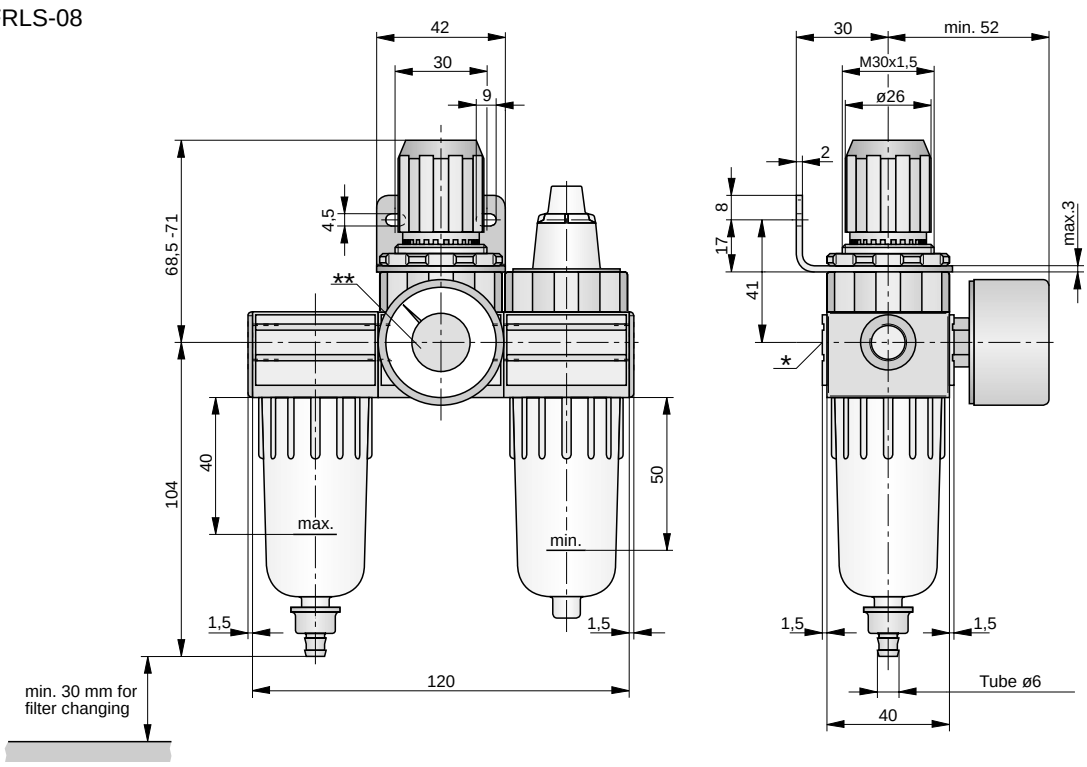

* On delivery the plug screw is not assembled.
** Two opposite gauge ports G1/8

Order Instructions

Description	Port size	Type	Order No.
Basic model	G1/8	**MFRLS-06**	**PB 40849-100**
Basic model	G1/4	**MFRLS-08**	**PB 40949-100**
With filter element 5 µm	G1/8	**MFRLS-06-5**	**PB 40849-110**
With filter element 5 µm	G1/4	**MFRLS-08-5**	**PB 40949-110**
With semiautomatic drainage	G1/8	**MFRLS-06-H**	**PB 40849-104**
With semiautomatic drainage	G1/4	**MFRLS-08-H**	**PB 40949-104**

Accessories

Description	Order No.
Porting block kit	**PL 16031**
Regulator spring for operating pressure 3 bar	**PL 15876**
Regulator spring for operating pressure 4 bar	**PL 16776**
Mounting ring for sheet thickness 6 mm (hole Ø 36.5 - 38 mm)	**PL 16198**
Mounting ring for sheet thickness 8 mm (hole Ø 36.5 - 38 mm)	**PL 15925**

Air Preparation Unit

G1/8, G1/4

Degree of moisture separation >90%

airfit light

MKLS

Characteristics			Pressures quoted as gauge pressure	
System			Air preparation unit comprising filter-regulator and oil mist lubricator *)	
Type			**MKLS-06**	**MKLS-08**
Port size			**G1/8**	**G1/4**
Max. condensate capacity		cm^3	12	
Condensate drainage			Manual or semiautomatic (pressure relief)	
Max. oil capacity		cm^3	35	
Oil refilling			Manual	
Installation			Vertical	
Medium and ambient temperatures	ϑ_{min} ϑ_{max}	°C °C	0 +50 at 10 bar	
Weight (mass)		kg	0.32	
Pneumatic Characteristic				
Operating pressure range - inlet pressure	$p_{1\,min}$ $p_{1\,max}$	bar bar	0 10	
Operating pressure range - outlet pressure	$p_{2\,min}$ $p_{2\,max}$	bar bar	0.5 on request 8	0.5 0.5[3] 3 4
Recommended flow[1]	Q_n	l/min m^3/h	**300** **18**	**550** **33**
Max. flow[2]	Q_{max}	l/min m^3/h	400 24	580 35
Degree of moisture separation at recommended flow	η	%	>90	

[1] at 6.3 bar and 25 m/s
[2] at p_1 = 10 bar and p_2 = 6.3 bar, Δp = 1 bar
For further characteristics see 5.09.004E, 5.09.007E
[3] By the use of special springs, the outlet pressure can be precisely regulated in the specified p_2 range
*) Use only recommended oils with viscosity VG32 to ISO 3448 (32 mm^2/s at 40°C) or HOERBIGER special oil, Order No.: KY 8766 (Cat.-No. 5.61.050E)

Air preparation unit comprising:
Filter-regulator
Oil mist lubricator
Gauge
Mounting bracket
Mounting ring

- mounting ring included
- recyclable technical polymer
- impact resistant glassfibre reinforced polymer housing (UV resistant) with metal thread inserts
- version with NPTF thread

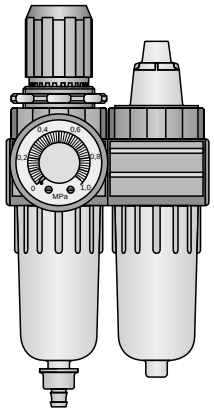

For single units see 5.09.004E-5.09.008E
For product group list see 5.09.001E

Data Sheet No. 5.09.003E-1

A1P431E00EAA00X

The right to introduce technical modifications is reserved

Flow Characteristics

Type: MKLS-08

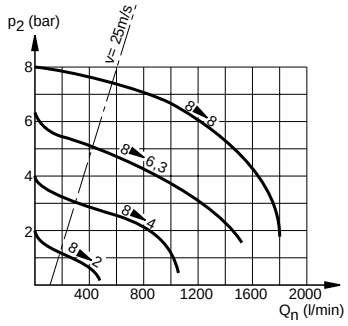

Accessories

Porting block kit G1/4
to provide unlubricated air
e.g. for air gun
for ruther details see 5.21.002E

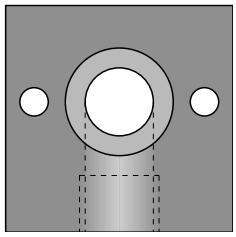

Order No.: PL 16031

Dimensions (mm)

Type: MKLS-06/08

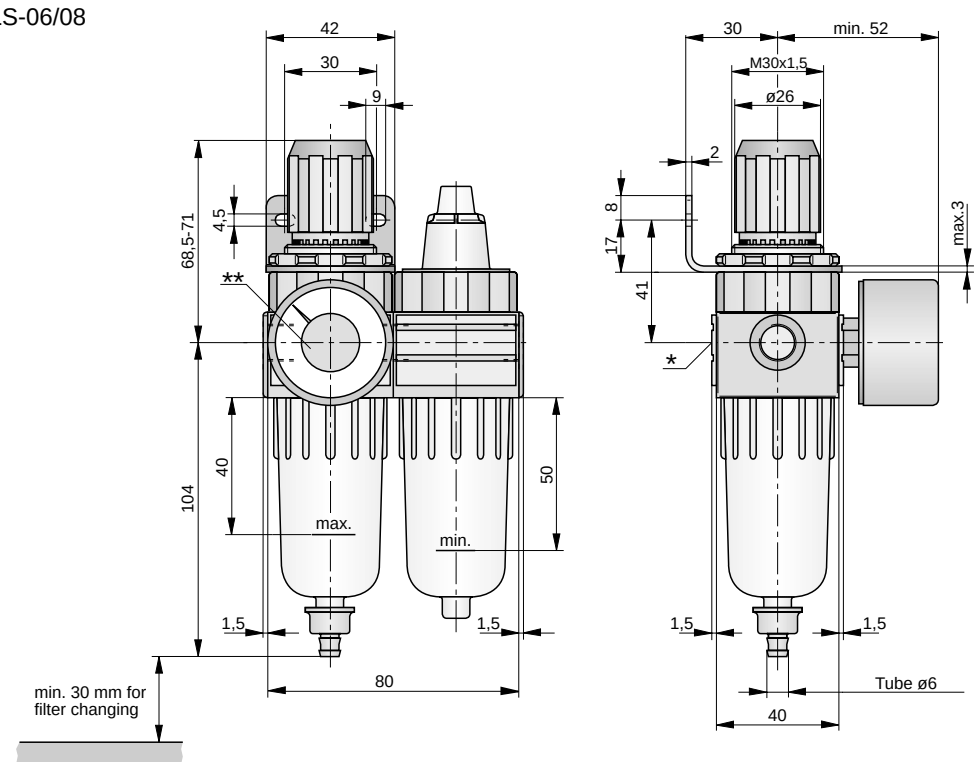

* On delivery the plug screw is not assembled.
** Two opposite gauge ports G1/8

Order Instructions

Description	Port size	Type	Order No.
Basic model	G1/8	**MKLS-06**	**PB 40449-100**
Basic model	G1/4	**MKLS-08**	**PB 40549-100**
With filter element 5 µm	G1/8	**MKLS-06-5**	**PB 40449-109**
With filter element 5 µm	G1/4	**MKLS-08-5**	**PB 40549-109**
With semiautomatic drainage	G1/8	**MKLS-06-H**	**PB 40449-104**
With semiautomatic drainage	G1/4	**MKLS-08-H**	**PB 40549-104**

Accessories

Description	Order No.
Porting block kit	**PL 16031**
Regulator spring for operating pressure 3 bar	**PL 15876**
Regulator spring for operating pressure 4 bar	**PL 16776**
Mounting ring for sheet thickness 6 mm (hole Ø 36.5 - 38 mm)	**PL 16198**
Mounting ring for sheet thickness 8 mm (hole Ø 36.5 - 38 mm)	**PL 15925**

Filter-Regulator

G1/8, G1/4

Pressure regulating valve with filter-water-separator

Degree of moisture separation >90%

airfit light

MKS

Characteristics			Pressures quoted as gauge pressure	
System			Cyclone system with filter element, combined with piston-type pressure regulating valve (spring loaded) with secondary pressure relief	
Type			**MKS-06**	**MKS-08**
Port size			**G1/8**	**G1/4**
Pore size of filter element		µm	30 (white) or 5 (yellow)	
Max. condensate capacity		cm^3	12	
Condensate drainage			Manual or semiautomatic (pressure relief)	
Installation			Vertical	
Medium and ambient temperatures	ϑ_{min} ϑ_{max}	°C °C	0 +50 at 10 bar	
Weight (mass)		kg	0.12	
Pneumatic Characteristic				
Operating pressure range - inlet pressure	$p_{1\,min}$ $p_{1\,max}$	bar bar	0 10	
Operating pressure range - outlet pressure	$p_{2\,min}$ $p_{2\,max}$	bar bar	0.5 on request 8	0.5 0.5[3] 3 4
Min. pressure difference	p_1-p_2	bar	0.2	
Hysteresis p_1=10/p_2=0 Hysteresis p_1=10/p_2=8		bar bar	1.6 0.6	
Recommended flow[1]	Q_n	l/min m^3/h	**300** **18**	**550** **33**
Max. flow[2]	Q_{max}	l/min m^3/h	550 33	550 33
Degree of moisture separation at recommended flow	η	%	>90	

[1] at 6.3 bar and 25 m/s
[2] at p_1 = 10 bar and p_2 = 6.3 bar, Δp = 1 bar
[3] By the use of special springs, the outlet pressure can be precisely regulated in the specified p_2 range

Flow Characteristics

Type: MKS-08

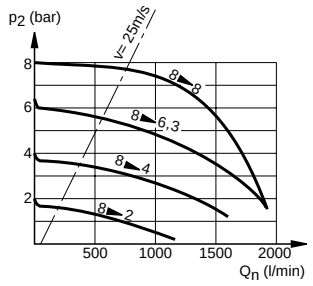

Outlet Pressure Variation with Fluctuation Inlet Pressure

Type: MKS-08

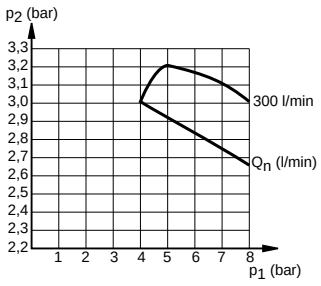

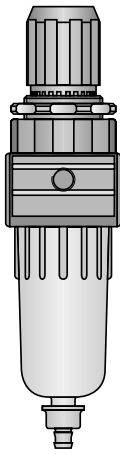

Filter-regulator with secondary pressure relief, hand wheel lockable

- mounting ring included
- recyclable technical polymer
- impact resistant glassfibre reinforced polymer housing (UV resistant) with metal thread inserts
- version with NPTF thread

For single units see 5.09.004E-5.09.008E
For air preparation units see 5.09.002E, 5.09.003E
For product group list see 5.09.001E

Data Sheet No. 5.09.004E-1

HOERBIGER ORIGA

A1P432E00EAA00X

The right to introduce technical modifications is reserved

Accessories

Gauge
Ø 40, 0-10 bar, G1/8

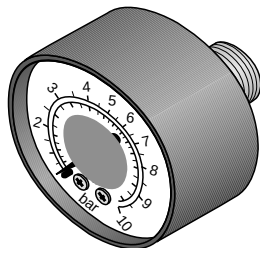

Order No.: KZ 8891

Accessories

Coupling kit

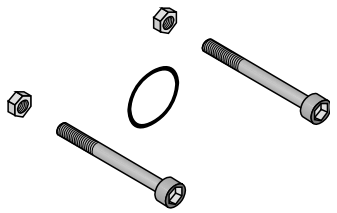

Order No.: PL 16030

Accessories

Mounting bracket

Order No.: PL 15531

Dimensions (mm)

Type: MKS-06/08

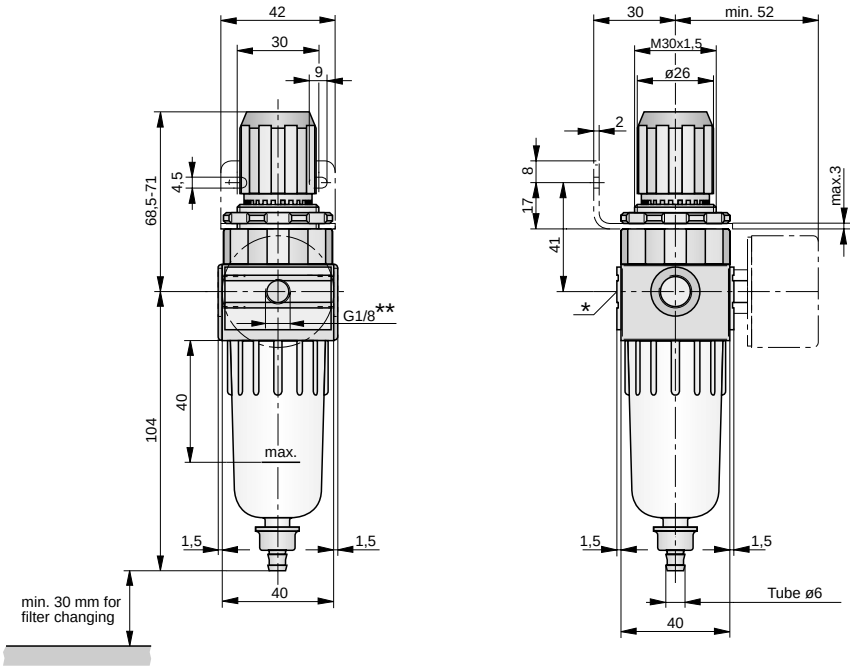

* On delivery the plug screw is not assembled.
** Two opposite gauge ports G1/8

Order Instructions

Description	Port size	Type	Order No.
Basic model	G1/8	**MKS-06**	**PB 40049-100**
Basic model	G1/4	**MKS-08**	**PB 40149-100**
With filter element 5 µm	G1/8	**MKS-06-5**	**PB 40049-116**
With filter element 5 µm	G1/4	**MKS-08-5**	**PB 40149-116**
With semiautomatic drainage	G1/8	**MKS-06-H**	**PB 40049-101**
With semiautomatic drainage	G1/4	**MKS-08-H**	**PB 40149-101**

Accessories

Description	Order No.
Gauge, Ø 40, 0-10 bar, G1/8	**KZ 8891 (airfit light design)** **KZ 8813 (neutral)**
Mounting bracket	**PL 15531**
Coupling kit	**PL 16030**
Coupling kit for 2 units to MKS/MRP (e.g. FF and FC)	**PL 16755**
Porting block kit G1/4	**PL 16031**
Regulator spring for operating pressure 3 bar	**PL 15876**
Regulator spring for operating pressure 4 bar	**PL 16776**
Mounting ring for sheet thickness 6 mm (hole Ø 36.5 - 38 mm)	**PL 16198**
Mounting ring for sheet thickness 8 mm (hole Ø 36.5 - 38 mm)	**PL 15925**

Filter-Water-Separator

G1/8, G1/4

Degree of moisture separation >90%

airfit light

MFS

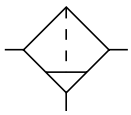

Characteristics			Pressures quoted as gauge pressure	
System			Cyclone system and filter element	
Type			**MFS-06**	**MFS-08**
Port size			**G1/8**	**G1/4**
Pore size of filter element		µm	30 (white) or 5 (yellow)	
Max. condensate capacity		cm^3	12	
Condensate drainage			Manual or semiautomatic (pressure relief)	
Installation			Vertical	
Medium and ambient temperatures	ϑ_{min} ϑ_{max}	°C °C	0 +50 at 10 bar	
Weight (mass)		kg	0.1	
Pneumatic Characteristic				
Operating pressure range - inlet pressure	$p_{1\,min}$ $p_{1\,max}$	bar bar	0 10	
Recommended flow[1)]	Q_n	l/min m^3/h	**300** **18**	**550** **33**
Max. flow[2)]	Q_{max}	l/min m^3/h	1085 65	1830 110
Degree of moisture separation at recommended flow	η	%	>90	

1) at 6.3 bar and 25 m/s
2) at p_1 = 10 bar and p_2 = 6.3 bar, Δp = 1 bar

Flow Characteristics

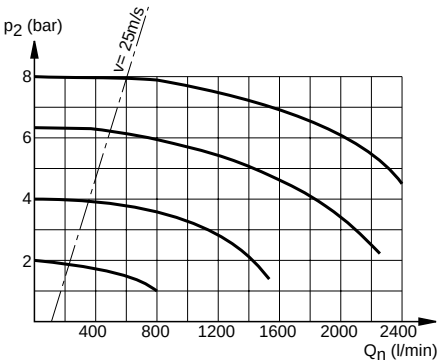

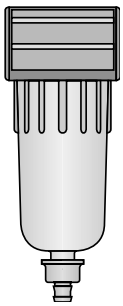

Filter-water-separator with cyclon system and filter element.

- mounting ring included
- recyclable technical polymer
- impact resistant glassfibre reinforced polymer housing (UV resistant) with metal thread inserts
- version with NPTF thread

For single units see 5.09.004E-5.09.008E
For air preparation units see 5.09.002E, 5.09.003E
For product group list see 5.09.001E

Data Sheet No. 5.09.005E-1

A1P433E00EAA00X

The right to introduce technical modifications is reserved

Accessories

Coupling kit

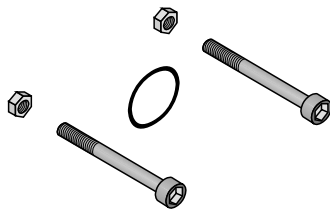

Order No.: PL 16030

Accessories

Porting block kit G1/4
to provide unlubricated air
e.g. for air gun
for ruther details see 5.21.002E

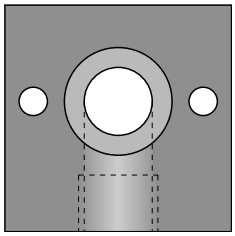

Order No.: PL 16031

Dimensions (mm)

Type: MFS-06/08

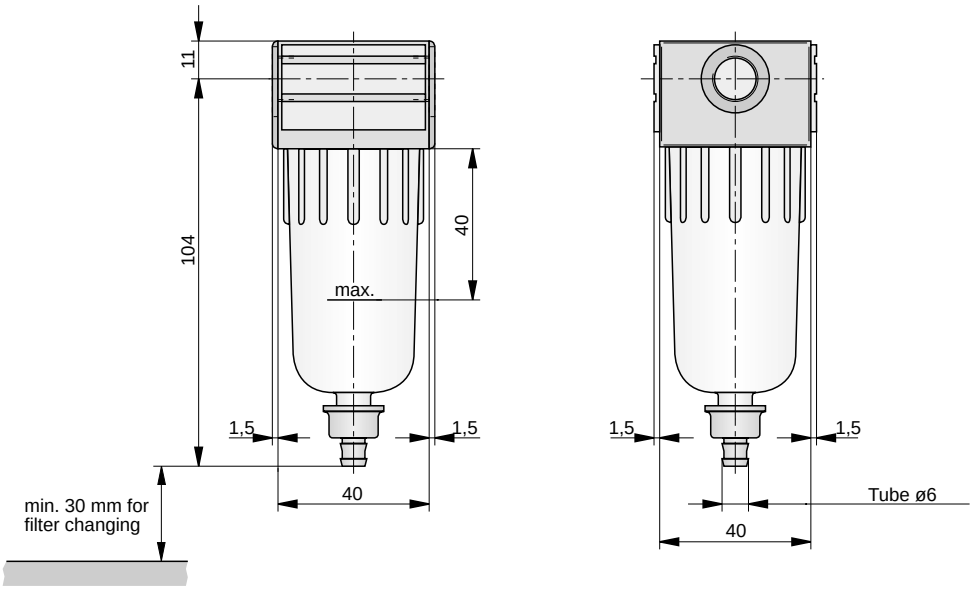

Order Instructions

Description	Port size	**Type**	**Order No.**
Basic model	G1/8	**MFS-06**	**PB 40649-100**
Basic model	G1/4	**MFS-08**	**PB 40749-100**
With filter element 5 µm	G1/8	**MFS-06-5**	**PB 40649-116**
With filter element 5 µm	G1/4	**MFS-08-5**	**PB 40749-116**
With semiautomatic drainage	G1/8	**MFS-06-H**	**PB 40649-101**
With semiautomatic drainage	G1/4	**MFS-08-H**	**PB 40749-101**

Accessories

Description	**Order No.**
Coupling kit	**PL 16030**
Coupling kit for 2 units to MKS/MRP (e.g. MFS and FF)	**PL 16755**
Coupling kit for FF+FC, MFS + FF, MFS + MLS	**PL 16669**
Porting block kit G1/4	**PL 16031**

Pressure Regulating Valve

G1/8, G1/4

airfit light

MRP

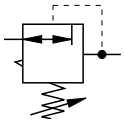

Characteristics			Pressures quoted as gauge pressure	
System			Piston-type pressure regulating valve (spring loaded) with secondary pressure relief	
Type			**MRP-06**	**MRP-08**
Port size			**G1/8**	**G1/4**
Installation			In any position	
Medium and ambient temperatures	ϑ_{min} ϑ_{max}	°C °C	0 +50	
Weight (mass)		kg	0.11	
Pneumatic Characteristic				
Operating pressure range - inlet pressure	$p_{1\,min}$ $p_{1\,max}$	bar bar	0 10	
Operating pressure range - outlet pressure	$p_{2\,min}$ $p_{2\,max}$	bar bar	0.5 on request 8	0.5 0.5[3] 3 4
Min. pressure difference	p_1-p_2	bar	0.2	
Hysteresis p_1=10/p_2=0 Hysteresis p_1=10/p_2=8		bar bar	1.6 0.6	
Recommended flow[1]	Q_n	l/min m³/h	**300** **18**	**550** **33**
Max. flow[2]	Q_{max}	l/min m³/h	530 32	770 46

[1] at 6.3 bar and 25 m/s
[2] at p_1 = 10 bar and p_2 = 6.3 bar, Δp = 1 bar
[3] By the use of special springs, the outlet pressure can be precisely regulated in the specified p_2 range

A1P434E00EA00X

Flow Characteristics

Type: MRP-08

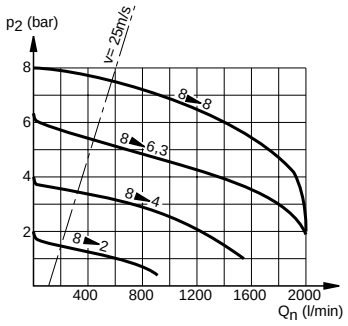

Outlet Pressure Variation with Fluctuacting Inlet Pressure

Type: MRP-08

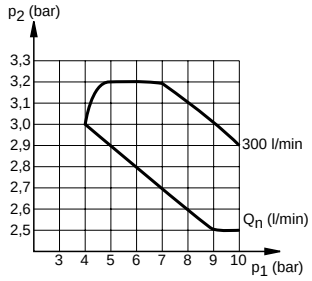

Piston-type pressure regulating valve (spring loaded) with secondary pressure relief, handwheel lockable

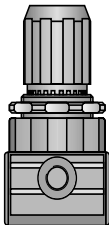

- mounting ring included
- recyclable technical polymer
- impact resistant glassfibre reinforced polymer housing (UV resistant) with metal thread inserts
- version with NPTF thread

The right to introduce technical modifications is reserved

For single units see 5.09.004E-5.09.008E
For air preparation units see 5.09.002E, 5.09.003E
For product group list see 5.09.001E

HOERBIGER ORIGA

Accessories

Gauge
Ø 40, 0-10 bar, G1/8

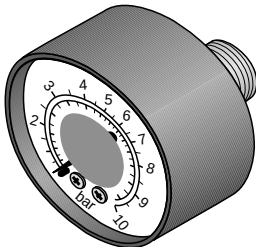

Order No.: KZ 8891

Accessories

Coupling kit

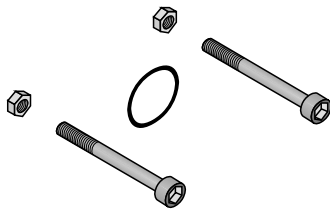

Order No.: PL 16030

Accessories

Mounting bracket

Order No.: PL 15531

Dimensions (mm)

Type: MRP-06/08

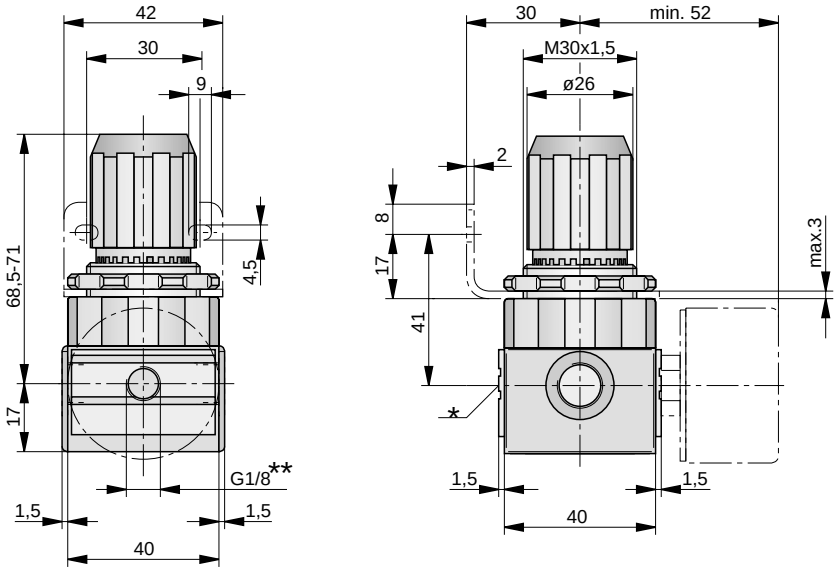

* On delivery the plug screw is not assembled.
** Two opposite gauge ports G1/8

Order Instructions

Description	Port size	Type	Order No.
Basic model	G1/8	**MRP-06**	**PB 21749-500**
Basic model	G1/4	**MRP-08**	**PB 21649-500**

Accessories

Description	Order No.
Gauge, Ø 40, 0-10 bar, G1/8	**KZ 8891 (airfit light design)** **KZ 8813 (neutral)**
Mounting bracket	**PL 15531**
Coupling kit	**PL 16030**
Coupling kit for 2 units to MKS/MRP (e.g. MFS and FF)	**PL 16755**
Porting block kit G1/4	**PL 16031**
Regulator spring for operating pressure 3 bar	**PL 15876**
Regulator spring for operating pressure 4 bar	**PL 16776**
Mounting ring for sheet thickness 6 mm (hole Ø 36.5 - 38 mm)	**PL 16198**
Mounting ring for sheet thickness 8 mm (hole Ø 36.5 - 38 mm)	**PL 15925**

Oil Mist Lubricator

G1/8, G1/4

airfit light

MLS

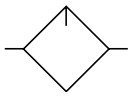

Characteristics			Pressures quoted as gauge pressure	
System			Oil mist lubricator with flow compensation	
Type			**MLS-06**	**MLS-08**
Port size			**G1/8**	**G1/4**
Oil/air ratio			Degressive (number of drops per minute remains constant)	
Max. oil capacity		cm^3	35	
Oil refilling *)			Manual	
Installation			Vertical	
Medium and ambient temperatures	ϑ_{min} ϑ_{max}	°C °C	0 +50 at 10 bar	
Weight (mass)		kg	0.09	
Pneumatic Characteristic				
Operating pressure range	p_{min} p_{max}	bar bar	0 10	
Recommended flow[1)]	Q_n	l/min m^3/h	**300** **18**	**550** **33**
Max. flow[2)]	Q_{max}	l/min m^3/h	865 52	1400 84
Best operating range for constant oil/air ratio	Q_n	m^3/h	See diagram "min. operating conditons"	

1) at 6.3 bar and 25 m/s
2) at p_1 = 10 bar and p_2 = 6.3 bar, Δp = 1 bar
*) Use only recommended oils with viscosity VG32 to ISO 3448 (32 mm^2/s at 40°C) or HOERBIGER special oil, Order No.: KY 8766 (Cat.-No. 5.61.050E)

Flow Characteristics

Type: MLS-08

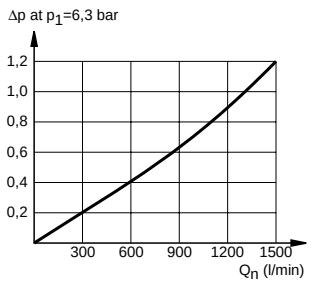

Oil/Air Ratio

Type: MLS-08

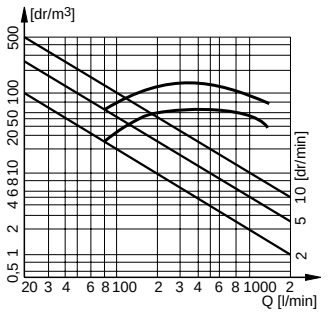

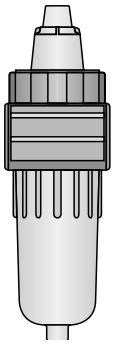

Oil mist lubricator with flow compensation (number of drops per minute is constant)

- recyclable technical polymer
- impact resistant glassfibre reinforced polymer housing (UV resistant) with metal thread inserts
- version with NPTF thread

For single units see 5.09.004E-5.09.008E
For air preparation units see 5.09.002E, 5.09.003E
For product group list see 5.09.001E

Data Sheet No. 5.09.007E-1

HOERBIGER ORIGA

A1P435E00EAA00X

The right to introduce technical modifications is reserved

Min. Operating Conditions

Type: MLS-08

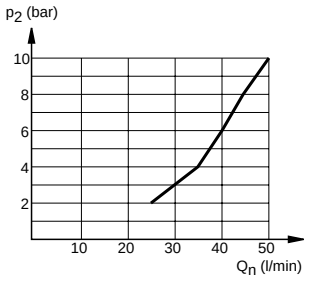

Accessories

Coupling kit

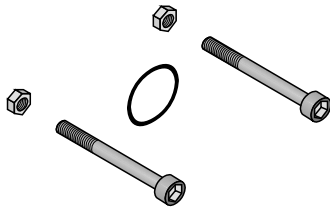

Order No.: PL 16030

Accessories

Porting block kit G1/4

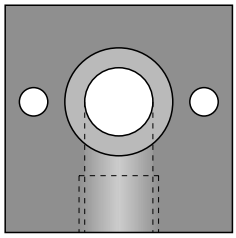

Order No.: PL 16031

Dimensions (mm)

Type: MLS-06/08

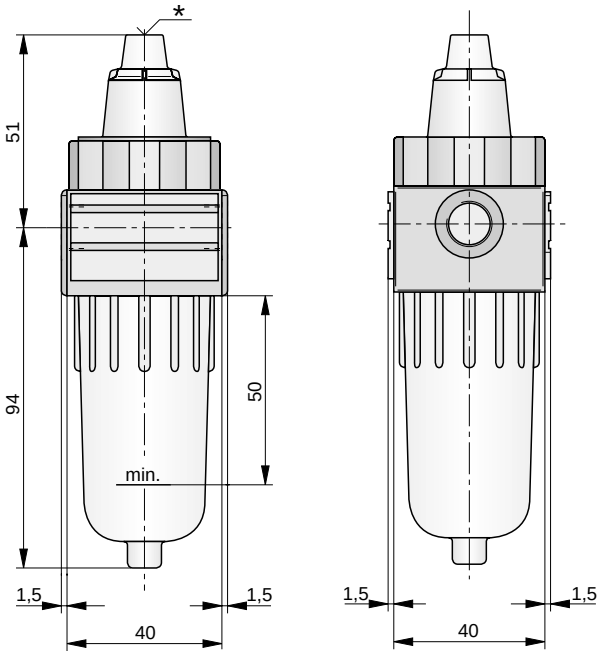

* Oil adjusting screw

Order Instructions

Description	Port size	**Type**	**Order No.**
Basic model	G1/8	**MLS-06**	**PB 40249-100**
Basic model	G1/4	**MLS-08**	**PB 40349-100**

Accessories

Description	**Order No.**
Coupling kit	**PL 16030**
Coupling kit for 2 units to MKS/MRP (e.g. MFS and MLS)	**PL 16755**
Coupling kit for FF+FC, MFS + FF, MFS + MLS	**PL 16669**
Porting block kit G1/4	**PL 16031**

PNEUMATIC
GROUP

AIR PREPARATION UNITS
G1/8-G3/8
SERIES

airfit Swing

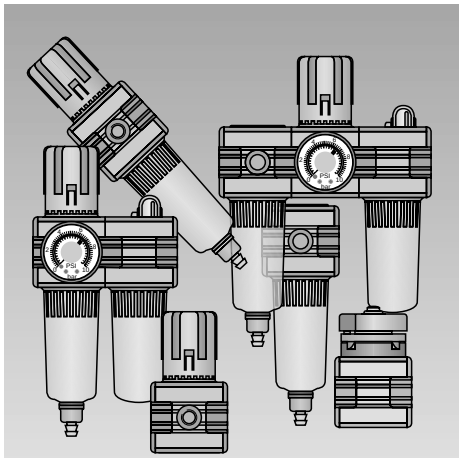

HOERBIGER
ORIGA

		Port size	Recommended flow (l/min)	Maximum flow menge (l/min)	**Type**	Data Sheet No.
Air preparation units	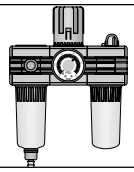	G1/8	300	610	**SFRL-1/8**	5.12.002E
		G1/4	550	825	**SFRL-1/4**	
		G3/8	680*	790	**SFRL-3/8**	
	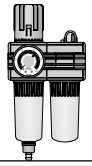	G1/8	300	560	**SKL-1/8**	5.12.003E
		G1/4	550	890	**SKL-1/4**	
		G3/8	680*	790	**SKL-3/8**	
Filter-regulator		G1/8	300	790	**SK-1/8**	5.12.004E
		G1/4	550	2280	**SK-1/4**	
		G3/8	850	3200	**SK-3/8**	
Filter-water-separator		G1/8	300	990	**SF-1/8**	5.12.005E
		G1/4	550	1440	**SF-1/4**	
		G3/8	850	1520	**SF-3/8**	
Pressure regulating valve		G1/8	300	790	**SR-1/8**	5.12.006E
		G1/4	550	1050	**SR-1/4**	
		G3/8	850	3300	**SR-3/8**	
Oil mist lubricator		G1/8	300	1260	**SL-1/8**	5.12.007E
		G1/4	550	1830	**SL-1/4**	
		G3/8	850	1880	**SL-3/8**	
Economy lubricator		G1/4	250	500	**SEL-1/4-3**	5.12.008E
		G1/4	450	800	**SEL-1/4-4**	
		G1/4	550	1000	**SEL-1/4-5**	
3/2 way shut-off valve		G1/4	550	2480	**SDV-1/4 SX**	5.21.011E
		G3/8	850	2600	**SDV-3/8 SX**	
Start valve		G1/4	550	1600	**SDA-1/4**	5.95.015E

* at 6.3 bar and 20 m/s, recommended because of size of unit.

A3P078E71EAA00X

The right to introduce technical modifications is reserved

Table of Contents see 5.00.001E

Air Preparation Unit

G1/8, G1/4, G3/8

airfit Swing

SFRL

Characteristics			Pressures quoted as gauge pressure		
System			Air preparation unit comprising filter-water-separator, diaphragm-type pressure regulating valve and oil mist lubricator *)		
Type			**SFRL-1/8**	**SFRL-1/4**	**SFRL-3/8**
Port size			**G1/8**	**G1/4**	**G3/8**
Max. condensate capacity		cm^3	22		
Pore size of filter element		µm	30 (white) or 5 (yellow)		
Condensate drainage			Manual or semiautomatic (pressure relief)		
Max. oil capacity		cm^3	45		
Oil refilling			Manual - also during operation		
Installation			Vertical		
Medium and ambient temperatures	ϑ_{min} ϑ_{max}	°C °C	0 +50 at 10 bar	(further temperatures on request)	
Weight (mass)		kg	0.95		
Pneumatic Characteristic[1)]					
Operating pressure range - inlet pressure	$p_{1\,min}$ $p_{1\,max}$	bar bar	0 16		
Operating pressure range - outlet pressure	$p_{2\,min}$ $p_{2\,max}$	bar bar	0.5 8	on request	0.5 4	0.5[3)] 15
Recommended flow[2)]	Q_n	l/min m^3/h	**300** **18**	**550** **33**	**680** **41**
Maximum flow[4)]	Q_{max}	l/min m^3/h	610 37	825 50	790 47

1) For further characteristics see 5.12.005E, 5.12,006E, 5.12.007E
2) at 6 bar and 25 m/s (at 6.3 bar and 20 m/s, recommended for G3/8)
3) By the use of special springs, the outlet pressure can be precisely regulated in the specified p_2 range
4) at p_1 = 10 bar and p_2 = 6.3 bar, Δp = 1 bar
*) Use only recommended oils with viscosity VG32 to ISO 3448 (32 mm^2/s at 40°C) or HOERBIGER special oil, Order No.: KY 8766 (Cat.-No. 5.61.050E)

Air preparation unit comprising:

Filter-water-separator
Diaphragm-type pressure regulating valve
Oil mist lubricator
Gauge
Mounting bracket

- easily adaptable to customer's choice of colour and private labelling
- quick, easy filter change with new Quick-Snap system
- filter contains no non-ferrous metal
- inlet pressure and volume compensation
- version with NPTF thread

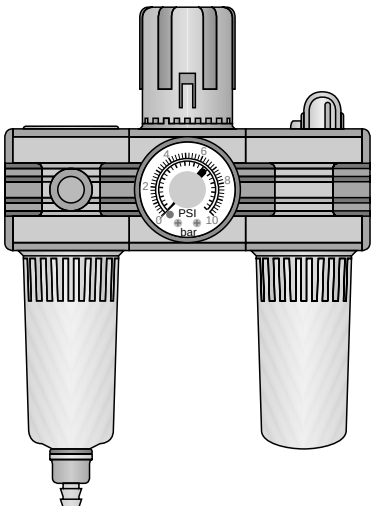

Flow Characteristics

Type: SFRL-1/4

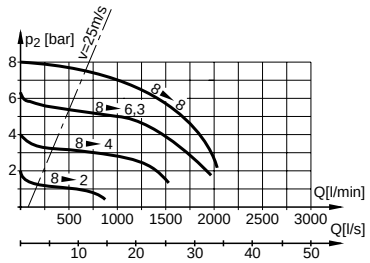

For single units see 5.12.004E-5.12.008E
For air preparation units see 5.12.002E, 5.12.003E
For product group list see 5.12.001E

Data Sheet No. 5.12.002E-1

A1P480E00EAA00X

The right to introduce technical modifications is reserved

HOERBIGER ORIGA

Accessories

3/2 way shut-off valve
Type: SDV-1/4X

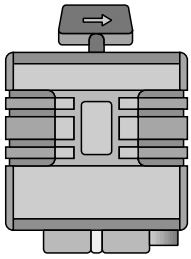

Order No.: PB 46749-001

Accessories

Coupling kit

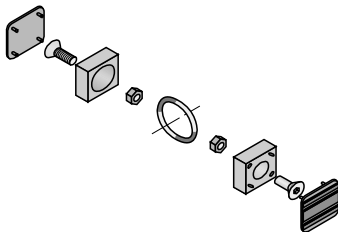

Order No.: PL 16959

Accessories

Porting block kit, Type: SX
to provide unlubricated air.
For further details see 5.21.010E

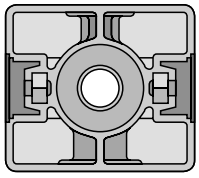

Order No.: PL 16969

Dimensions (mm)

Type: SFRL-1/8, 1/4, 3/8

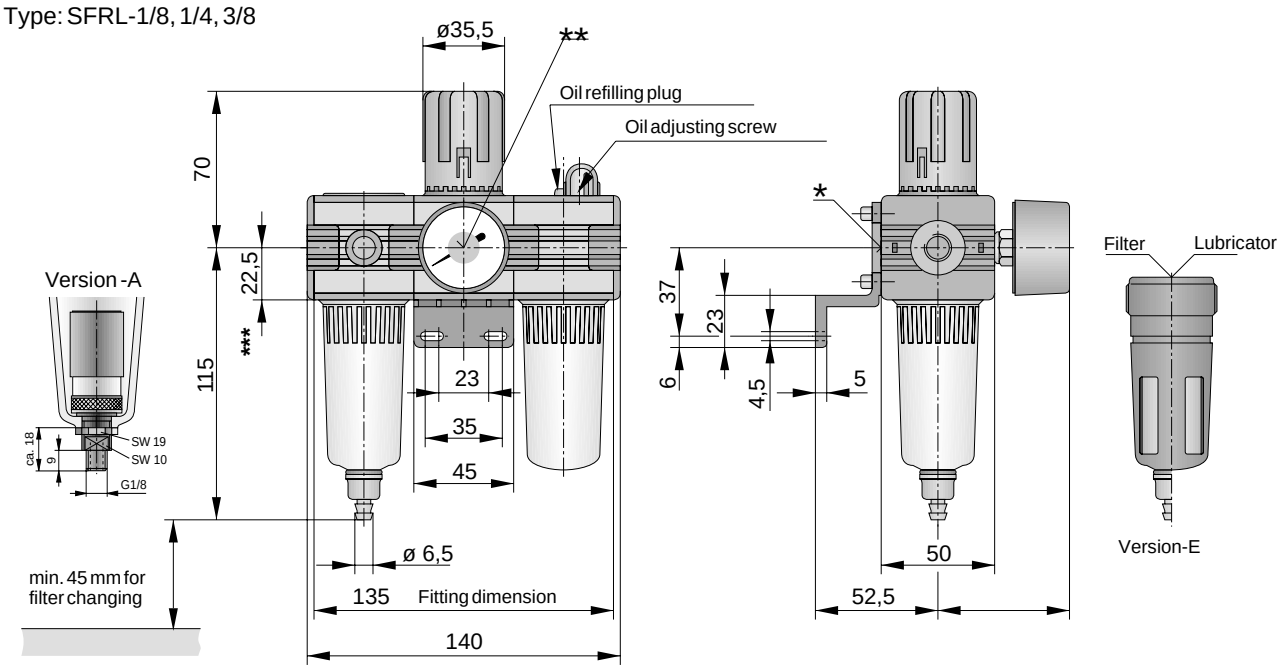

* On delivery the plug screw is not assembled.
** Two opposite gaugeports G1/8
*** 130 mm on Version with automatic drainage

Order Instructions

Description	Port size	Type	Order No.
Basic model	G1/8	**SFRL-1/8**	**PB 48049-000**
Basic model	G1/4	**SFRL-1/4**	**PB 48149-000**
Basic model	G3/8	**SFRL-3/8**	**PB 48249-000**
With semiautomatic drainage	G1/8	**SFRL-1/8-H**	**PB 48049-001**
With semiautomatic drainage	G1/4	**SFRL-1/4-H**	**PB 48149-001**
With semiautomatic drainage	G3/8	**SFRL-3/8-H**	**PB 48249-001**
With automatic drainage	G1/8	**SFRL-1/8-A**	**PB 48049-002**
With automatic drainage	G1/4	**SFRL-1/4-A**	**PB 48149-002**
With automatic drainage	G3/8	**SFRL-3/8-A**	**PB 48249-002**
With metal bowl [1])	G1/8	**SFRL-1/8-D**	**PB 48049-003**
With metal bowl [1])	G1/4	**SFRL-1/4-D**	**PB 48149-003**
With metal bowl [1])	G3/8	**SFRL-3/8-D**	**PB 48249-003**
With metal bowl (sight glass) [1])	G1/8	**SFRL-1/8-E**	**PB 48049-004**
With metal bowl (sight glass) [1])	G1/4	**SFRL-1/4-E**	**PB 48149-004**
With metal bowl (sight glass) [1])	G3/8	**SFRL-3/8-E**	**PB 48249-004**

[1]) **Versions with metal bowl and automatic drainage on request.**

Accessories

Description	Bestell-Nr.
Porting block kit G1/4 / 3xG1/8 (inc. coupling kit)	**PL 16969**
Porting block kit with integrated check valve	**PL 17316**
Regulator spring for operating pressure 4 bar *)	**PL 15249**
Regulator spring for operating pressure 15 bar *)	**PL 16320**
3/2 way shut-off valve SDV-1/4XS, 3-fold lockable, spool type	**PB 46749-101**
3/2 way shut-off valve SDV-3/8XS, 3-fold lockable, spool type	**PB 46849-101**
Coupling kit	**PL 16959**
Solvent resistant sight glass	**PL 07233**
Bowl guard kit	**PL 16970**
Bell disassembly tool	**PL 17638**

*) For gauges for other pressure ranges see 5.21.005E

Air Preparation Unit

G1/8, G1/4, G3/8

airfit Swing

SKL

Characteristics			Pressures quoted as gauge pressure		
System			Air preparation unit comprising filter-regulator and oil mist lubricator *)		
Type			**SKL-1/8**	**SKL-1/4**	**SKL-3/8**
Port size			**G1/8**	**G1/4**	**G3/8**
Max. condensate capacity		cm^3	22		
Pore size of filter element		µm	30 (white) or 5 (yellow)		
Condensate drainage			Manual or semiautomatic (pressure relief)		
Max. oil capacity		cm^3	45		
Oil refilling			Manual - also during operation		
Installation			Vertical		
Medium and ambient temperatures	ϑ_{min} ϑ_{max}	°C °C	0 +50 at 10 bar	(further temperatures on request)	
Weight (mass)		kg	0.75		
Pneumatic Characteristic[1)]					
Operating pressure range - inlet pressure	$p_{1\,min}$ $p_{1\,max}$	bar bar	0 16		
Operating pressure range - outlet pressure	$p_{2\,min}$ $p_{2\,max}$	bar bar	0.5 on request 8	0.5 4	0.5[3)] 15
Recommended flow[2)]	Q_n	l/min m^3/h	**300** **18**	**550** **33**	**680** **41**
Maximum flow[4)]	Q_{max}	l/min m^3/h	560 34	890 53	790 47

1) For further characteristics see 5.12.004E, 5.12,007E
2) at 6 bar and 25 m/s (at 6.3 bar and 20 m/s, recommended for G3/8)
3) By the use of special springs, the outlet pressure can be precisely regulated in the specified p_2 range
4) at p_1 = 10 bar and p_2 = 6.3 bar, Δp = 1 bar
*) Use only recommended oils with viscosity VG32 to ISO 3448 (32 mm^2/s at 40°C) or HOERBIGER special oil, Order No.: KY 8766 (Cat.-No. 5.61.050E)

Air preparation unit comprising:

Filter-regulator
Oil mist lubricator
Gauge
Mounting bracket

- easily adaptable to customer's choice of colour and private labelling
- quick, easy filter change with new Quick-Snap system
- filter contains no non-ferrous metal
- inlet pressure and volume compensation
- version with NPTF thread

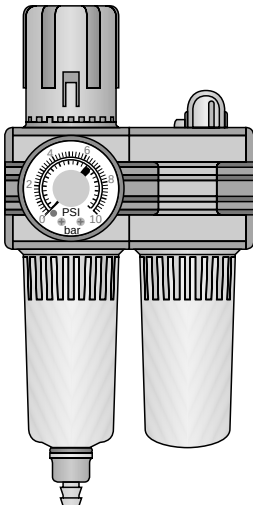

Flow Characteristics

Type: SKL-1/4

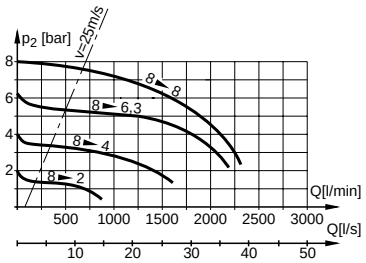

For single units see 5.12.004E-5.12.008E
For air preparation units see 5.12.002E, 5.12.003E
For product group list see 5.12.001E

Data Sheet No. 5.12.003E-1

A1P481E00EAA00X

The right to introduce technical modifications is reserved

HOERBIGER ORIGA

Accessories

3/2 way shut-off valve
Type: SDV-1/4X

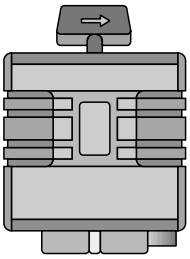

Order No.: PB 46749-001

Accessories

Coupling kit

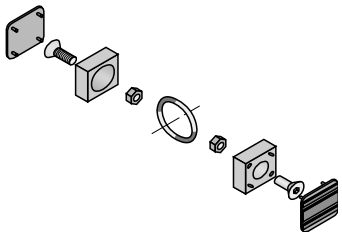

Order No.: PL 16959

Accessories

Porting block kit, Type: SX
to provide unlubricated air.
For further details see 5.21.010E

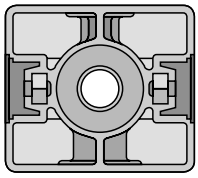

Order No.: PL 16969

Abmessungen (mm)

Typ: SKL-1/8, 1/4, 3/8

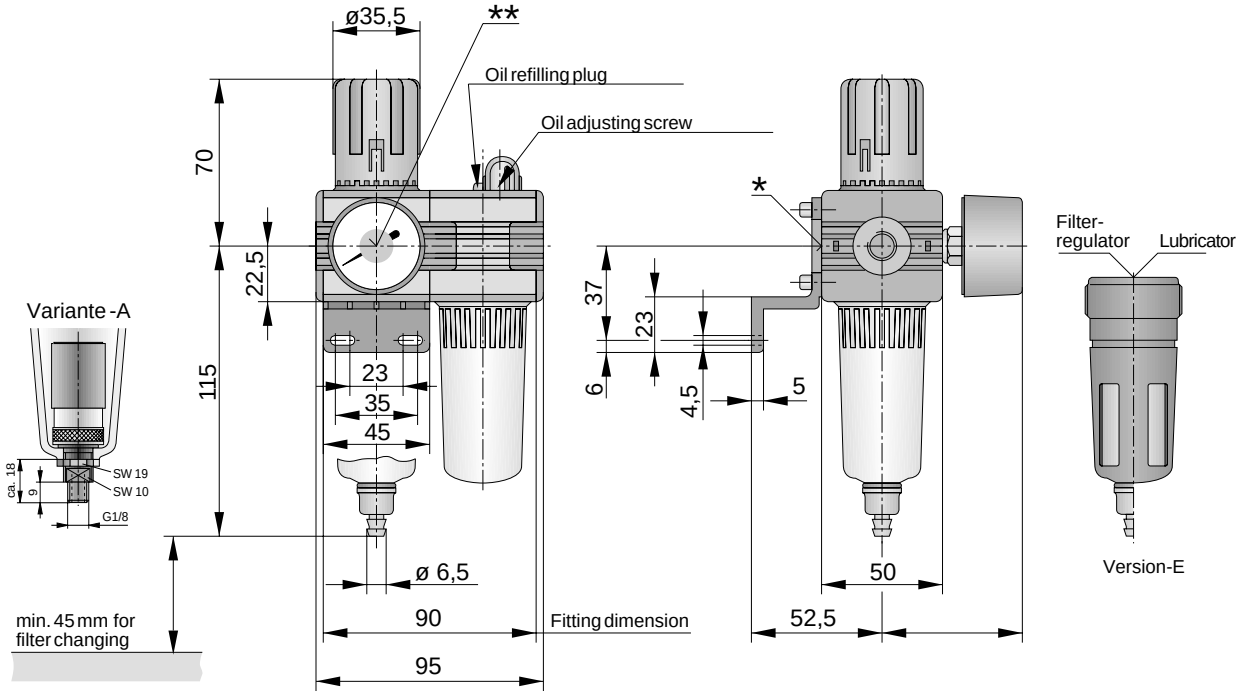

* On delivery the plug screw is not assembled.
** wo opposite gauge ports G1/8
*** 130 mm on Version with automatic drainage

Order Instructions

Description	Port size	Type	Order No.
Basic model	G1/8	**SKL-1/8**	**PB 48349-000**
Basic model	G1/4	**SKL-1/4**	**PB 48449-000**
Basic model	G3/8	**SKL-3/8**	**PB 48549-000**
With semiautomatic drainage	G1/8	**SKL-1/8-H**	**PB 48349-001**
With semiautomatic drainage	G1/4	**SKL-1/4-H**	**PB 48449-001**
With semiautomatic drainage	G3/8	**SKL-3/8-H**	**PB 48549-001**
With automatic drainage	G1/8	**SKL-1/8-A**	**PB 48349-002**
With automatic drainage	G1/4	**SKL-1/4-A**	**PB 48449-002**
With automatic drainage	G3/8	**SKL-3/8-A**	**PB 48549-002**
With metal bowl [1])	G1/8	**SKL-1/8-D**	**PB 48349-003**
With metal bowl [1])	G1/4	**SKL-1/4-D**	**PB 48449-003**
With metal bowl [1])	G3/8	**SKL-3/8-D**	**PB 48549-003**
With metal bowl (sight glass) [1])	G1/8	**SKL-1/8-E**	**PB 48349-004**
With metal bowl (sight glass) [1])	G1/4	**SKL-1/4-E**	**PB 48449-004**
With metal bowl (sight glass) [1])	G3/8	**SKL-3/8-E**	**PB 48549-004**

[1]) **Versions with metal bowl and automatic drainage on request**

Accessories

Description	Order No.
Porting block kit G1/4 / 3xG1/8 (inc. coupling kit)	**PL 16969**
Porting block kit with integrated check valve	**PL 17316**
Regulator spring for operating pressure 4 bar *)	**PL 15249**
Regulator spring for operating pressure 15 bar *)	**PL 16320**
3/2 way shut-off valve SDV-1/4XS, 3-fold lockable, spool type	**PB 46749-101**
3/2 way shut-off valve SDV-3/8XS, 3-fold lockable, spool type	**PB 46849-101**
Coupling kit	**PL 16959**
Solvent resistant sight glass	**PL 07233**
Bowl guard kit	**PL 16970**
Bell disassembly tool	**PL 17638**

*) For gauges for other pressure ranges see 5.21.005E

Filter-Regulator

G1/8, G1/4, G3/8

Pressure regulating valve with filter-water-separator

Degree of moisture separation >95 (90) %

SK

Characteristics			Pressures quoted as gauge pressure		
System			Cyclone system and filter element, combined with diaphragm-type pressure regulating valve (spring loaded) with secondary pressure relief		
Type			**SK-1/8**	**SK-1/4**	**SK-3/8**
Port size			**G1/8**	**G1/4**	**G3/8**
Pore size of filter element		µm	30 (white), 5 (yellow) 1		
Max. condensate capacity		cm^3	22		
Condensate drainage			Manual or semiautomatic (pressure relief)		
Installation			Vertical		
Medium and ambient temperatures	ϑ_{min} ϑ_{max}	°C °C	0 +50 at 10 bar	(further temperatures on request)	
Weight (mass)		kg	0.35		
Pneumatic Characteristic					
Operating pressure range - inlet pressure	$p_{1\,min}$ $p_{1\,max}$	bar bar	0 16		
Operating pressure range - outlet pressure	$p_{2\,min}$ $p_{2\,max}$	bar bar	0.5 on request 8	0.5 4	0.5[2)] 15
Min. pressure difference	p_1-p_2	bar	0.2		
Hysteresis p_1=10/p_2=0 Hysteresis p_1=10/p_2=8		bar bar	0.5 0.4		
Recommended flow[1)]	Q_n	l/min m^3/h	**300** **18**	**550** **33**	**850** **51**
Maximum Fow[3)]	Q_{max}	l/min m^3/h	790 47	2280 137	3200 192
Degree of moisture separation at recommended flow	η	%	95	95	90

1) at p_2 = 6 bar and 25 m/s
2) By the use of special springs, the outlet pressure can be precisely regulated in the specified p_2 range
3) at p_1 = 10 bar and p_2 = 6.3 bar, Δp = 1 bar

Flow Characteristics

Type: SK-1/4

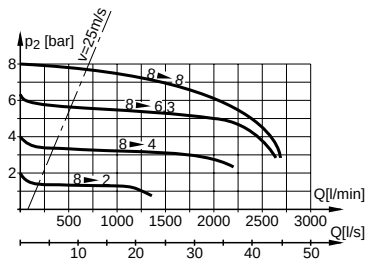

Outlet Pressure Variation with Fluctuation Inlet Pressure

Type: SK-1/4

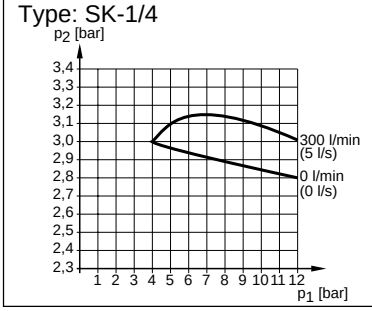

Accessories

Gauge
Ø40 mm, 0-10 bar, G1/8

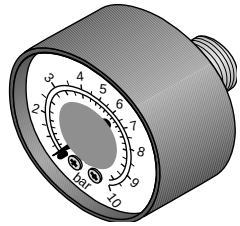

Order No.: KZ 8891

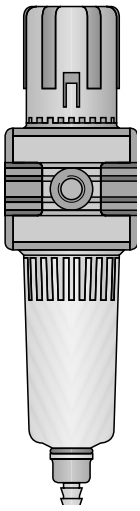

Filter-regulator with secondary pressure relief, inlet pressure and volume compensation hand wheel lockable

- easily adaptable to customer's choice of colour and private labelling
- quick, easy filter change with new Quick-Snap system
- inlet pressure and volume compensation
- version with NPTF thread

For single units see 5.12.004E-5.12.008E
For air preparation units see 5.12.002E, 5.12.003E
For product group list see 5.12.001E

A1P482E00EAA00X

The right to introduce technical modifications is reserved

Dimensions (mm)

Type: SK-1/8, 1/4, 3/8

* On delivery the plug screw is not assembled.
** Two opposite gauge ports G1/8
*** 130 mm on Version with automatic drainage

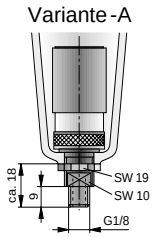

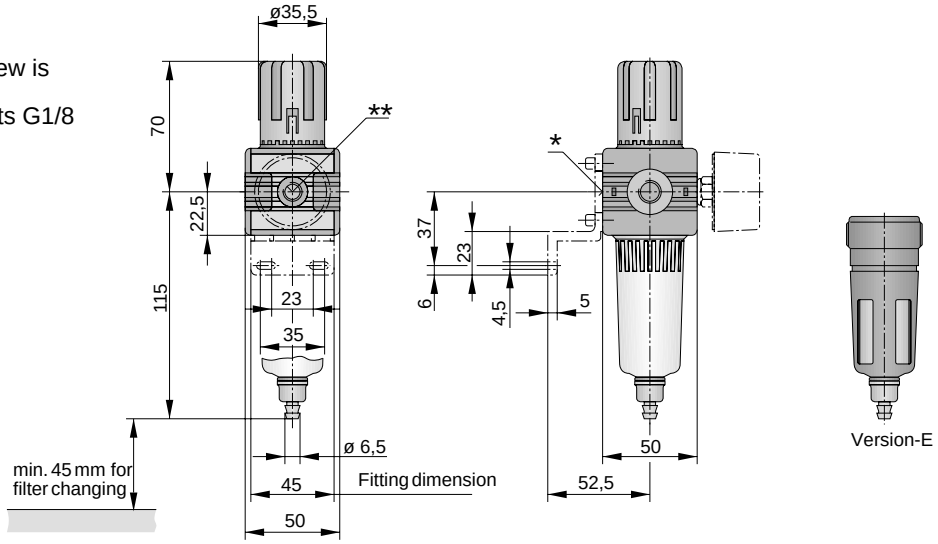

Order Instructions

Description	Port size	Type	Order No.
Basic model	G1/8	**SK-1/8**	**PB 45649-000**
Basic model	G1/4	**SK-1/4**	**PB 45749-000**
Basic model	G3/8	**SK-3/8**	**PB 45849-000**
With filter element 5 µm	G1/8	**SK-1/8-5**	**PB 45649-016**
With filter element 5 µm	G1/4	**SK-1/4-5**	**PB 45749-016**
With filter element 5 µm	G3/8	**SK-3/8-5**	**PB 45849-016**
With semiautomatic drainage	G1/8	**SK-1/8-H**	**PB 45649-001**
With semiautomatic drainage	G1/4	**SK-1/4-H**	**PB 45749-001**
With semiautomatic drainage	G3/8	**SK-3/8-H**	**PB 45849-001**
With automatic drainage	G1/8	**SK-1/8-A**	**PB 45649-002**
With automatic drainage	G1/4	**SK-1/4-A**	**PB 45749-002**
With automatic drainage	G3/8	**SK-3/8-A**	**PB 45849-002**
With metal bowl [1])	G1/8	**SK-1/8-D**	**PB 45649-031**
With metal bowl [1])	G1/4	**SK-1/4-D**	**PB 45749-031**
With metal bowl [1])	G3/8	**SK-3/8-D**	**PB 45849-031**
With metal bowl (sight glass) [1])	G1/8	**SK-1/8-E**	**PB 45649-004**
With metal bowl (sight glass) [1])	G1/4	**SK-1/4-E**	**PB 45749-004**
With metal bowl (sight glass) [1])	G3/8	**SK-3/8-E**	**PB 45849-004**

[1]) **Versions with metal bowl and automatic drainage on request**

Accessories

Description	Order No.
Gauge Ø 40, 0-10 bar, G1/8 *)	**KZ 8891**
Mounting kit	**PL 16965**
Coupling kit	**PL 16959**
Bowl guard kit	**PL 16970**
Porting block kit G1/4 / 3xG1/8 (inc. coupling kit)	**PL 16969**
Porting block kit with integrated check valve	**PL 17316**
Regulator spring for operating pressure 4 bar	**PL 15249**
Regulator spring for operating pressure 15 bar	**PL 16320**
3/2 way shut-off valve SDV-1/4XS, 3-fold lockable, spool type	**PB 46749-101**
3/2 way shut-off valve SDV-3/8XS, 3-fold lockable, spool type	**PB 46849-101**
Bell disassembly tool	**PL 17638**

*) For pressure ranges see 5.21.005E

Filter-Water-Separator, Dust Filter

G1/8, G1/4, G3/8

Degree of moisture separation > 95 (90) %
> 99% (SFD)

Characteristics			Pressures quoted as gauge pressure					
System			Cyclone system and filter element					
Type			SF-1/8	SFD-1/8	SF-1/4	SFD-1/4	SF-3/8	SFD-3/8
Port size			**G1/8**		**G1/4**		**G3/8**	
Pore size of filter element		µm	Standard: 30 (white) 5 (yellow) and 1(Type SFD)					
Max. condensate capacity		cm^3	22					
Condensate drainage			Manual or semiautomatic with pressure relief (Type SF)					
Installation			Vertical					
Medium and ambient temperatures	ϑ_{min} ϑ_{max}	°C °C	0 +50 at 10 bar	(further temperatures on request)				
Weight (mass)		kg	0.25					
Pneumatic Characteristic								
Operating pressure range	p_{min} p_{max}	bar bar	0 16					
Recommended flow[1)]	Q_n	l/min m^3/h	**300** **18**		**550** **33**		**850** **51**	
Maximumflow[2)]	Q_{max}	l/min m^3/h	990 59	1030 62	1440 86	1340 80	1520 91	1620 97
Degree of moisture separation at recommended flow	η	%	95	*	95	*	90	*

[1)] at p = 6 bar and 25 m/s
[2)] at p_1 = 6.3 bar, Δp = 1 bar

*only solid particles > 99 % related to 1µm

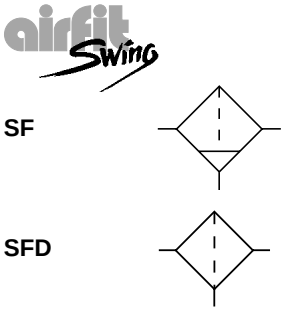

SF:
Filter-water-separator with cyclone system and filter element.

SFD:
For compressed air systems with air dryers.

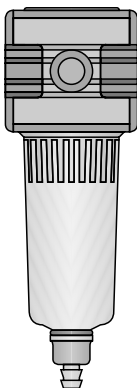

- easily adaptable to customer's choice of colour and private labelling
- quick, easy filter change with new Quick-Snap system
- no nonferrous metal
- version with NPTF thread

Flow Characteristics

Type: SF-1/4

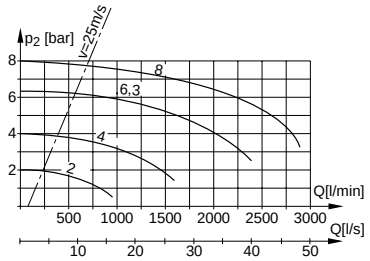

Accessories

Coupling kit
for filter-regulator-lubricator combination

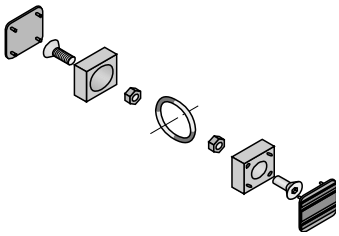

Order No.: PL 16959

For single units see 5.12.004E-5.12.007E
For air preparation units see 5.12.002E, 5.12.003E
For product group list see 5.12.001E

Data Sheet No. 5.12.005E-1

A1P483E00EAA00X

The right to introduce technical modifications is reserved

Dimensions (mm)

Type: SF-1/8, 1/4, 3/8

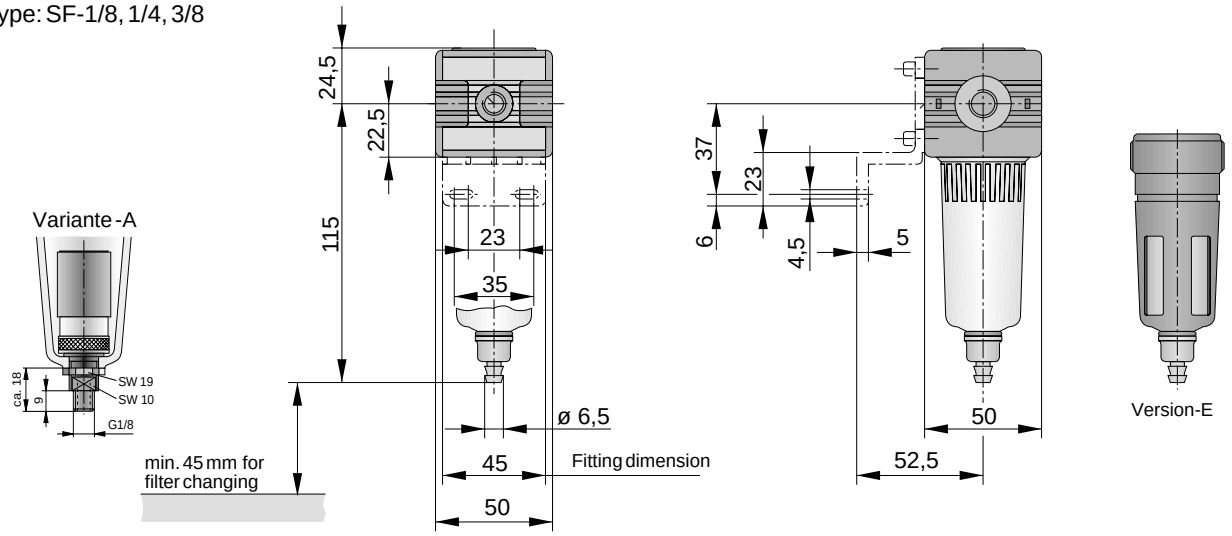

*130 mm on Version with automatic drainage

Order Instructions

Description	Port size	**Type**	**Order No.**
Basic model	G1/8	**SF-1/8**	**PB 45049-000**
Basic model	G1/4	**SF-1/4**	**PB 45149-000**
Basic model	G3/8	**SF-3/8**	**PB 45249-000**
With filter element 5 µm	G1/8	**SF-1/8-5**	**PB 45049-016**
With filter element 5 µm	G1/4	**SF-1/4-5**	**PB 45149-016**
With filter element 5 µm	G3/8	**SF-3/8-5**	**PB 45249-016**
With filter element 5 µm	G1/8	**SFD-1/8-1**	**PB 45049-070**
With filter element 5 µm	G1/4	**SFD-1/4-1**	**PB 45149-070**
With filter element 5 µm	G3/8	**SFD-3/8-1**	**PB 45249-070**
With semiautomatic drainage	G1/8	**SF-1/8-H**	**PB 45049-001**
With semiautomatic drainage	G1/4	**SF-1/4-H**	**PB 45149-001**
With semiautomatic drainage	G3/8	**SF-3/8-H**	**PB 45249-001**
With automatic drainage	G1/8	**SF-1/8-A**	**PB 45049-002**
With automatic drainage	G1/4	**SF-1/4-A**	**PB 45149-002**
With automatic drainage	G3/8	**SF-3/8-A**	**PB 45249-002**
With metal bowl [1])	G1/8	**SF-1/8-D**	**PB 45049-003**
With metal bowl [1])	G1/4	**SF-1/4-D**	**PB 45149-003**
With metal bowl [1])	G3/8	**SF-3/8-D**	**PB 45249-003**
With metal bowl (sight glass) [1])	G1/8	**SF-1/8-E**	**PB 45049-004**
With metal bowl (sight glass) [1])	G1/4	**SF-1/4-E**	**PB 45149-004**
With metal bowl (sight glass)[1])	G3/8	**SF-3/8-E**	**PB 45249-004**

[1]) **Version with metal bowl and automatic drainage on request**

Accessories

Description	**Order No.**
Mounting kit	**PL 16965**
Coupling kit	**PL 16959**
Bowl guard kit	**PL 16970**
Porting block kit G1/4 / 3xG1/8 (inc. coupling kit)	**PL 16969**
Porting block kit with integrated check valve	**PL 17316**
3/2 way shut-off valve SDV-1/4XS, 3-fold lockable, spool type	**PB 46749-101**
3/2 way shut-off valve SDV-1/4XS, 3-fold lockable, spool type	**PB 46849-101**

Pressure Regulating Valve

G1/8, G1/4, G3/8

airfit Swing

SR

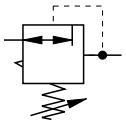

Characteristics			Pressures quoted as gauge pressure		
System			Diaphragm-type pressure regulating valve (spring loaded) with secondary pressure relief		
Type			**SR-1/8**	**SR-1/4**	**SR-3/8**
Port size			**G1/8**	**G1/4**	**G3/8**
Installation			In any position		
Medium and ambient temperatures	ϑ_{min} ϑ_{max}	°C °C	0 +60	(further temperatures on request)	
Weight (mass)		kg	0.3		
Pneumatic Characteristic					
Operating pressure range - inlet pressure	$p_{1\,min}$ $p_{1\,max}$	bar bar	0 16		
Operating pressure range - outlet pressure	$p_{2\,min}$ $p_{2\,max}$	bar bar	0.5 8	on request	0.5 4	0.5[2)] 15
Min. pressure difference	p_1-p_2	bar	0.2		
Hysteresis p_1=10/p_2=0 Hysteresis p_1=10/p_2=8		bar bar	0.5 0.4		
Recommended flow[1)]	Q_n	l/min m³/h	**300** **18**	**550** **33**	**850** **51**
Maximum flow[3)]	Q_{max}	l/min m³/h	790 47	2850 171	3300 198

1) at p_2 = 6 bar and 25 m/s
2) By the use of special springs, the outlet pressure can be precisely regulated in the specified p_2 range
3) at p_1 = 10 bar and p_2 = 6.3 bar, Δp = 1 bar

Pressure Regulator with High Relief Capacity

Type: SR-1/4SO
PB 45449-030

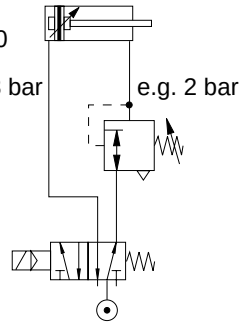

Example:
To regulate the pressure in the direction of the stroke, install the regulator as shown in the diagram. The pressure relief uses the full cross-section of the valve, allowing the cylinder to travel at full speed.

Flow Characteristics

Type: SR-1/4

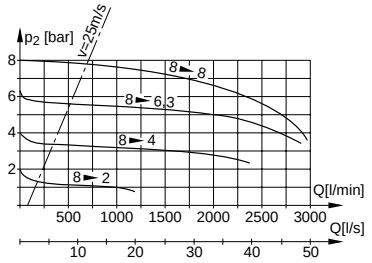

Outlet Pressure Variation with Fluctuacting Inlet Pressure

Type: SR-1/4

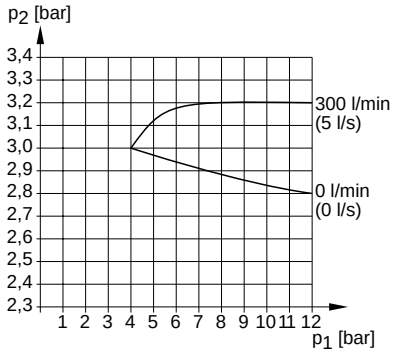

Diaphragm-type pressure regulating valve (spring loaded) with secondary pressure relief, inlet pressure and volume compensation handwheel lockable

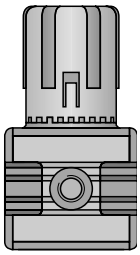

- easily adaptable to customer's choice of colour and private labelling
- inlet pressure and volume compensation
- version with NPTF thread
- specially developed roller diaphragm

For single units see 5.12.004E-5.12.008E
For air preparation units see 5.12.002E, 5.12.003E
For product group list see 5.12.001E

HOERBIGER ORIGA

Data Sheet No. 5.12.006E-1

A1P484E00EAA00X

The right to introduce technical modifications is reserved

Dimensions (mm)

Type: SR-1/8, 1/4, 3/8

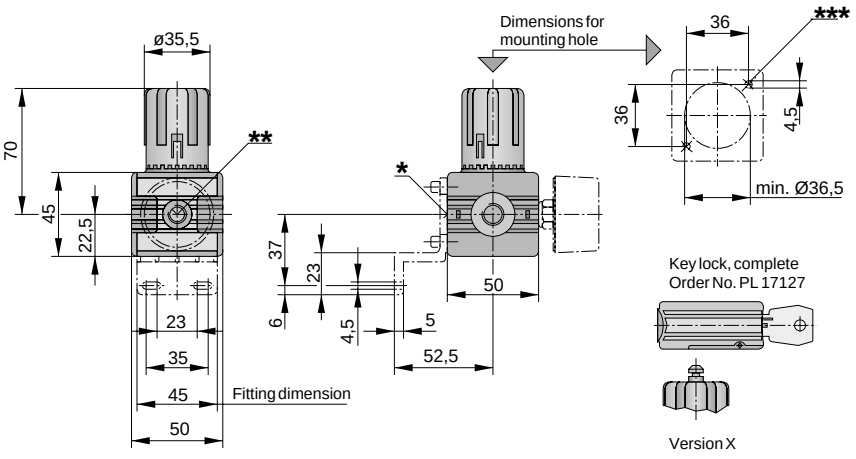

* On delivery the plug screw is not assembled.
** Two opposite gauge ports G1/8
*** For self-tapping screw M4, DIN 7500
maximum screw depth: 10 mm

Accessories

Gauge
Ø 40 mm, 0-10 bar, G1/8

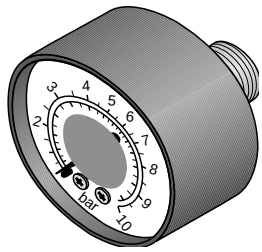

Order No.: KZ 8891

Order Instructions

Description	Port size	**Type**	**Order No.**
Basic model	G1/8	**SR-1/8**	**PB 45349-000**
Basic model	G1/4	**SR-1/4**	**PB 45449-000**
Basic model	G3/8	**SR-3/8**	**PB 45549-000**
With adapter for keylock	G1/8	**SR-1/8-X**	**PB 45349-006**
With adapter for keylock	G1/4	**SR-1/4-X**	**PB 45449-006**
With adapter for keylock	G3/8	**SR-3/8-X**	**PB 45549-006**

Accessories

Description	**Order No.**
Gauge Ø 40, 0-10 bar, G1/8 *)	**KZ 8891**
Mounting kit	**PL 16965**
Coupling kit	**PL 16959**
Porting block kit G1/4 / 3xG1/8 (inc. coupling kit)	**PL 16969**
Porting block kit with integrated check valve	**PL 17316**
Keylock	**PL 17127**
Regulator spring for operating pressure 4 bar	**PL 15249**
Regulator spring for operating pressure 15 bar	**PL 16320**
3/2 way shut-off valve SDV-1/4XS, 3-fold lockable, spool type	**PB 46749-101**
3/2 way shut-off valve SDV-3/8XS, 3-fold lockable, spool type	**PB 46849-101**

*) For pressure ranges see 5.21.005E

Oil Mist Lubricator

G1/8, G1/4, G3/8

airfit Swing

SL

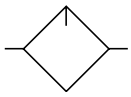

Characteristics			Pressures quoted as gauge pressure		
System			Oil mist lubricator with flow compensation*)		
Type			**SL-1/8**	**SL-1/4**	**SL-3/8**
Port size			**G1/8**	**G1/4**	**G3/8**
Oil/air ratio			Degressive (number of drops per minute remains constant)		
Max. oil capacity		cm^3	45		
Oil refilling			Manual - also during operation		
Installation			Vertical		
Medium and ambient temperatures	ϑ_{min} ϑ_{max}	°C °C	0 +50 at 10 bar	(further temperatures. on request)	
Weight (mass)		kg	0.25		
Pneumatic Characteristic					
Operating pressure range	p_{min} p_{max}	bar bar	0 16		
Recommended flow[1)]	Q_n	l/min m^3/h	**300** **18**	**550** **33**	**850** **51**
Maximum Flow[2)]	Q_{max}	l/min m^3/h	1260 76	1830 110	1880 113
Recommended operating range	Q_n	m^3/h	0.2...30		0.2...54

1) at 6 bar and 25 m/s
2) at p_1 = 6.3 bar, Δp = 1 bar
*) Use only recommended oils with viscosity VG32 to ISO 3448 (32 mm^2/s at 40°C) or HOERBIGER special oil, Order No.: KY 8766 (Cat.-No. 5.61.050E)

A1P485E00KY00X

Flow Characteristics

Type: SL-1/4

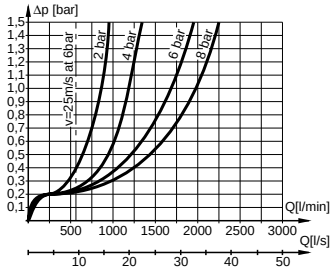

Oil/Air Ratio

Type: SL-1/4

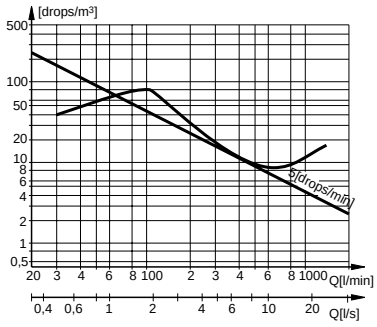

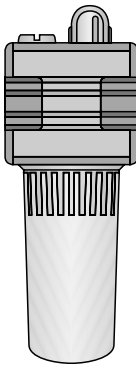

Oil mist lubricator with flow compensation (number of drops per minute is constant)

- easily adaptable to customer's choice of colour and private labelling
- version with NPTF thread

* can also be adjusted for lower oil input.

For single units see 5.12.004E-5.12.008E
For air preparation units see 5.12.002E, 5.12.003E
For product group list see 5.12.001E

The right to introduce technical modifications is reserved

HOERBIGER ORIGA

Min. Operating Conditions

Type: SL-1/4

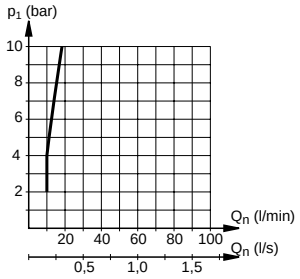

Accessories

Solvent resistant sight glass

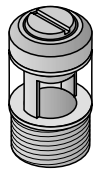

Order No.: PL 07233

Bowl Guard Kit

For further details see 5.21.009E

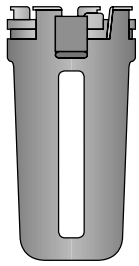

Order No.: PL 16970

Dimensions (mm)

Type: SL-1/8, 1/4, 3/8

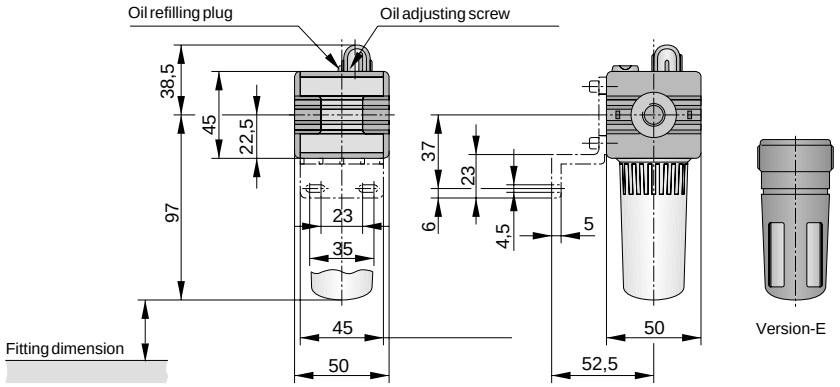

Order Instructions

Description	Port size	**Type**	**Order No.**
Basic model	G1/8	**SL-1/8**	**PB 46049-000**
Basic model	G1/4	**SL-1/4*)**	**PB 46149-000**
Basic model	G3/8	**SL-3/8**	**PB 46249-000**
With metal bowl	G1/8	**SL-1/8-D**	**PB 46049-003**
With metal bowl	G1/4	**SL-1/4-D**	**PB 46149-003**
With metal bowl	G3/8	**SL-3/8-D**	**PB 46249-003**
With metal bowl (sight glass)	G1/8	**SL-1/8-E**	**PB 46049-004**
With metal bowl (sight glass)	G1/4	**SL-1/4-E**	**PB 46149-004**
With metal bowl (sight glass)	G3/8	**SL-3/8-E**	**PB 46249-004**

Accessories

Description	**Order No.**
Oil for compressed air 1litre (5.61.050E)	**KY 8766**
Mounting kit	**PL 16965**
Coupling kit	**PL 16959**
Bowl guard kit	**PL 16970**
Porting block kit G1/4 / 3xG1/8 (inc. coupling kit)	**PL 16969**
Porting block kit with integrated check valve	**PL 17316**
Solvent resistant sight glass	**PL 07233**
3/2 way shut-off valve SDV-1/4XS, 3-fold lockable, spool type	**PB 46749-001**
3/2 way shut-off valve SDV-3/8XS, 3-fold lockable, spool type	**PB 46849-001**

*) Alternative: economy lubricator SEL-1/4 on request (data sheet 5.12.008E)

Economy Lubricator

G1/4

(Wick lubricator)

SEL-1/4

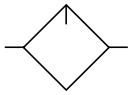

Characteristics			Pressures quoted as gauge pressure		
System			Wick-type micro-mist lubricator*)		
Type			**SEL-1/4-3**	**SEL-1/4-4**	**SEL-1/4-5**
Port size			**G1/4**	**G1/4**	**G1/4**
Flow diameter		mm	Ø3	Ø4	Ø5
Max. oil capacity		cm^3	45		
Oil refilling			Manual		
Installation			Vertical		
Medium and ambient temperatures	ϑ_{min} ϑ_{max}	°C °C	-20 +50 at 10 bar	(further temperatures. on request)	
Weight (mass)		kg	0.25		
Pneumatic Characteristics					
Operating pressure range	p_{min} p_{max}	bar bar	0 16		
Recommended flow[1)]	Q_n	l/min m^3/h	**250** **15**	**450** **27**	**550** **33**
Minimum flow	Q_{min}	l/min m^3/h	100 6	200 12	300 18
Maximum flow	Q_{max}	l/min m^3/h	500 30	800 48	1000 60
Minimum oil content for operation[1)]	V	cm^3	70	100	200
Oil output		mg/m^3	5-30 depending on application		

[1)] at 6.3 bar

*) Use only recommended oils with viscosity VG32 to ISO 3448 (32 mm^2/s at 40°C) or HOERBIGER special oil, Order No.: KY 8766 (Cat.-No. 5.61.050E)

A1P486E00KY00X

Function

The operation of the new Economy Lubricator is based on the ability of the air stream to pick up very small quartities of oil from the wick.

To ensure best results with different flow rates the lubricators are available with various flow diameters.
Please use the above table to select the best SEL lubricator for your application.

Diagram

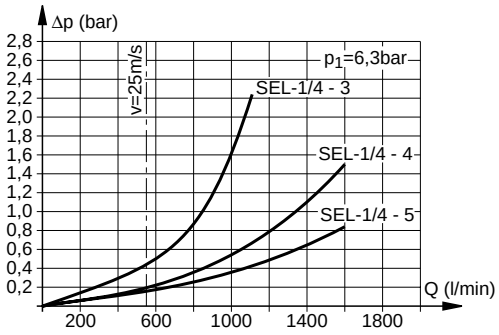

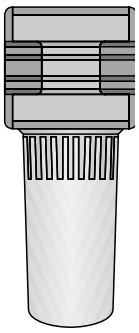

Oil mist lubricator for very low oil output - has no adjustment and is therefore tamper-proof.

Oil mist output is strongly influenced by operating conditions - please consult us before ordering.

- easily adaptable to customer's choice of colour and private labelling
- version with NPTF thread

The right to introduce technical modifications is reserved

For single units see 5.12.004E-5.12.008E
For air preparation units see 5.12.002E, 5.12.003E
For product group list see 5.12.001E

Dimensions (mm)

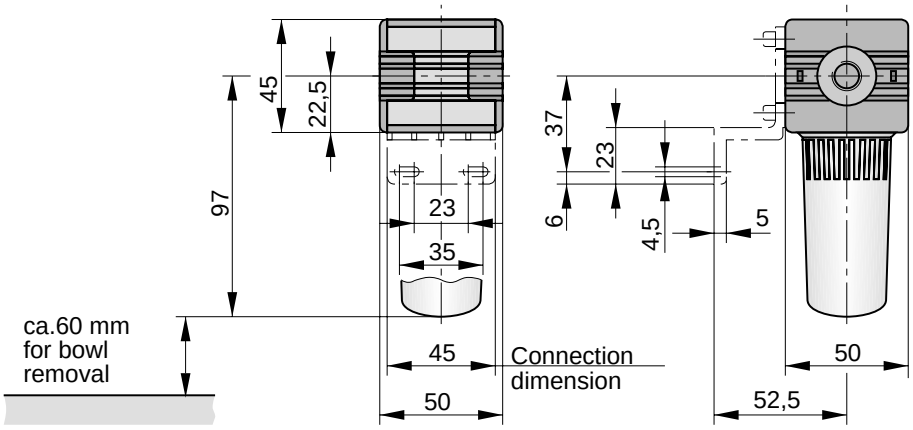

Order Instructions

Description	Port size	Type	Order No.
With flow diameter 3 mm	G1/4	**SEL-1/4-3**	**PB 46449-300**
With flow diameter 4 mm	G1/4	**SEL-1/4-4**	**PB 46449-400**
With flow diameter 5 mm	G1/4	**SEL-1/4-5**	**PB 46449-500**
G1/8 and G3/8 on request			

Accessories

Description	Order No.
Oil for compressed air 1litre	**KY 8766**
Mounting kit	**PL 16965**
Coupling kit	**PL 16959**
Bowl guard kit	**PL 16970**
Porting block kit G1/4 / 3xG1/8 (inc. coupling kit)	**PL 16969**
Porting block kit with integrated check valve	**PL 17316**

Pressure Regulating Valve

with through p_1 supply port

G1/4, G3/8

Characteristics			Pressures quoted as gauge pressure	
System			Diaphragm-type pressure regulating valve (spring loaded) with flow compensation and secondary pressure relief	
Type			**SR-1/4-T**	**SR-3/8-T**
Port size			**G1/4**	**G3/8**
Installation			In any position	
Medium and ambient temperatures	ϑ_{min} ϑ_{max}	°C °C	0 +60	(further temperatures on request)
Weight (mass)		kg	0.3	
Pneumatic Characteristic				
Operating pressure range - inlet pressure	$p_{1\,min}$ $p_{1\,max}$	bar bar	0 16	
Operating pressure range - outlet pressure	$p_{2\,min}$ $p_{2\,max}$	bar bar	0.5 on request 8	0.5 0.5 [1)] 4 15
Min. pressure difference	p_1-p_2	bar	0.2	
Hysteresis p_1=10/p_2=0 Hysteresis p_1=10/p_2=8		bar bar	0.5 0.4	

[1)] By the use of special springs, the outlet pressure can be precisely regulated in the specified p_2 range

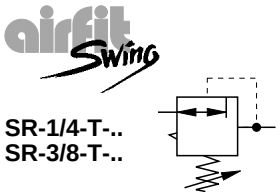

SR-1/4-T-..
SR-3/8-T-..

Diaphragm-type pressure regulating valve (spring loaded) with secondary pressure relief, inlet pressure and volume compensation handwheel lockable

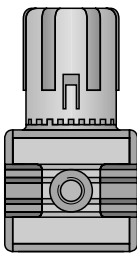

- easily adaptable to customer's choice of colour and private labelling
- inlet pressure and volume compensation
- version with NPTF thread
- specially developed roller diaphragm

Installation Instructions for Battery Mounting

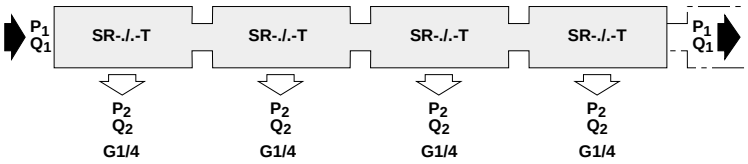

For single units see 5.12.004E-5.12.008E
For air preparation units see 5.12.002E, 5.12.003E
For product group list see 5.12.001E

A1P595E00KY00X

The right to introduce technical modifications is reserved

HOERBIGER ORIGA

Accessories

Gauge
Ø 40 mm, 0-10 bar, G1/8

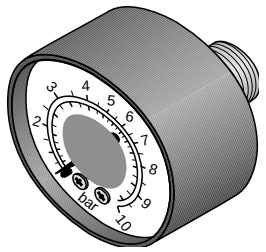

Order No.: KZ 8891

Accessories

Coupling kit
for assembly of two single unit

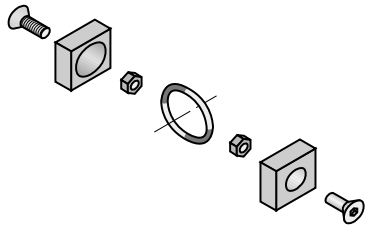

Order No.: PL 16959

Dimensions (mm)

Type: SR-1/4-T, SR-3/8-T

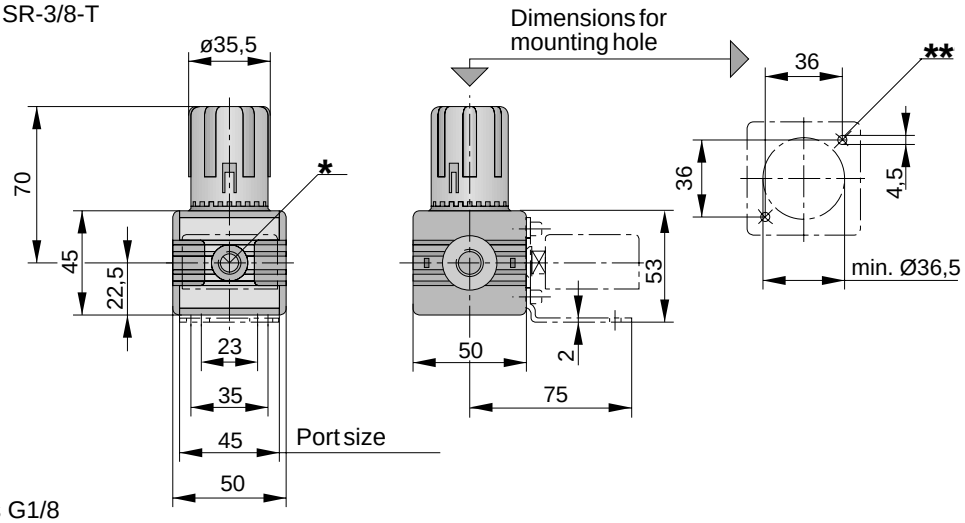

* Gauge ports G1/8
** with through p1 supply port

Order Instructions

Description	Port size	Type	Order No.
Pressure regulating valve	p_1 - G1/4, through p_2 - G1/4, outlet	**SR-1/4-T-1/4**	**PB 45449-100**
Pressure regulating valve	p_1 - G3/8, through p_2 - G1/4, outlet	**SR-3/8-T-1/4**	**PB 45549-100**

Accessories

Description	Order No.
Gauge Ø 40, 0-10 bar, G1/8, bottom connection *)	**KZ 8820**
Mounting kit	**PL 16965**
Coupling kit	**PL 16959**
Porting block kit G1/4 / 3xG1/8 (inc. coupling kit)	**PL 16969**
Porting block kit with integrated check valve	**PL 17316**
Keylock	**PL 17127**
Regulator spring for operating pressure 4 bar	**PL 15249**
Regulator spring for operating pressure 15 bar	**PL 16320**
3/2 way shut-off valve SDV-1/4XS, 3-fold lockable, spool type	**PB 46749-101**
3/2 way shut-off valve SDV-3/8XS, 3-fold lockable, spool type	**PB 46849-101**

*) For pressure ranges see 5.21.005E

PNEUMATIC
GROUP

AIR PREPARATION UNITS
G3/8-G1/2 (G3/4)
SERIES

airfit comfort

HOERBIGER
ORIGA

		Port size	max. Q* (l/min)	Recommended flow (l/min)*	**Type**	Order No.
Air preparation units		G3/8	1900	850	**CFRL-3/8**	5.19.002E
		G1/2	2000	1900	**CFRL-1/2**	
		G3/8	1900	850	**CKL-3/8**	5.19.003E
		G1/2	1950	1900	**CKL-1/2**	
Filter-regulator		G3/8	3000	850	**CK-3/8**	5.19.004E
		G1/2	3300	1900	**CK-1/2**	
Filter-water separator		G3/8	4500	850	**CF-3/8**	5.19.005E
		G1/2	5000	1900	**CF-1/2**	
Special filter for air dryers		G3/8	-	850	**CFD-3/8**	5.19.005E
		G1/2	-	1900	**CFD-1/2**	
Pressure regulating valve		G3/8	4200	850	**CR-3/8**	5.19.006E
		G1/2	5700	1900	**CR-1/2**	
		G1/2	-	1900	**XR-15** previous series	5.20.012E
pilot operated pressure regul. valve		G3/8, G1/2	-	850/1900	**CRV-10/15**	5.55.004E
Oil mist lubricator		G3/8	5000	850	**CL-3/8**	5.19.011E
		G1/2	5300	1900	**CL-1/2**	
3/2 way shut-off valve		G3/8	-	850	**CDV-3/8**	5.21.014E
		G1/2	7500	1900	**CDV-1/2**	
Soft-start valve		G3/8	3500	850	**CDA-3/8**	5.95.020E
		G1/2	3700	1900	**CDA-1/2**	
Stop valve		G3/8	2500	850	**CDR-3/8P, CDR-3/8BE**	5.95.019E
		G1/2	2900	1900	**CDR-1/2P, CDR-1/2E**	

* at p_1 = 6.3 bar and Δp = 1 bar bzw. bei p_1 = 10 bar auf p_2 = 6.3 bar, Δp = 1 bar
see individual data sheets.

A1P545E71EAA00X

The right to introduce technical modifications is reserved

Table of Contents see 5.00.001E

Air Preparation Unit

G3/8, G1/2

airfit comfort

CFRL...

Characteristics			Pressures quoted as gauge pressure	
System			Air preparation unit comprising filter-water-separator, diaphragm-type pressure regulating valve and oil mist lubricator *)	
Type			**CFRL-3/8**	**CFRL-1/2**
Port size			**G3/8**	**G1/2**
Max. condensate capacity		cm^3	57	
Condensate drainage			Standard: manual, semiautomatic with pressure relief fully automatic (float type)	
Max. oil capacity		cm^3	112	
Oil refilling			Standard: manual - also during operation	
Installation			Vertical	
Medium and ambient temperatures	ϑ_{min} ϑ_{max}	°C °C	0 +50 at 10 bar (further temperatures on request)	
Weight (mass)		kg	1.85	
Pneumatic Characteristic[1]				
Operating pressure range - inlet pressure	$p_{1\,min}$ $p_{1\,max}$	bar bar	0 16	
Operating pressure range - outlet pressure	$p_{2\,min}$ $p_{2\,max}$	bar bar	0.5 on request 8	0.5 0.5[3] 4 10
Recommended flow[2]	Q_n	l/min m^3/h	**850** **51**	**1900** **114**
Maximum flow[4]	Q_{max}	l/min m^3/h	1900 114	2000 120

[1] For further characteristics see 5.19.011E, 5.19.015E, 5.19.016E
[2] at 6 bar and 25 m/s
[3] By the use of special springs, the outlet pressure can be precisely regulated in the specified p_2 range
[4] at p_1 = 10 bar and p_2 = 6.3 bar, Δp = 1 bar
*) Use only recommended oils with viscosity VG32 to ISO 3448 (32 mm^2/s at 40°C) or HOERBIGER special oil, Order No.: KY 8766 (Cat.-No. 5.61.050E)

Air preparation unit comprising:

Filter-water-separator
Diaphragm-type pressure regulating valve
Oil mist lubricator
Gauge
Mounting bracket

- Easy and quick installation of mounting kit
- Suitable for direct wall mounting
- Modern design
- Version with NPTF thread

Flow Characteristics

Type: CFRL-1/2

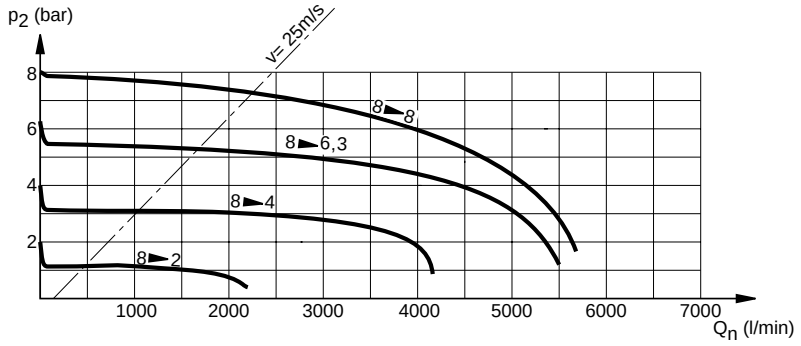

For single units see 5.19.004E-5.19.011E
For air preparation units see 5.19.002E, 5.19.003E
For product group list see 5.19.001E

Data Sheet No. 5.19.002E-1

A1P553E00KY00X

The right to introduce technical modifications is reserved

HOERBIGER ORIGA

Dimensions (mm)

Type: CFRL-1/2

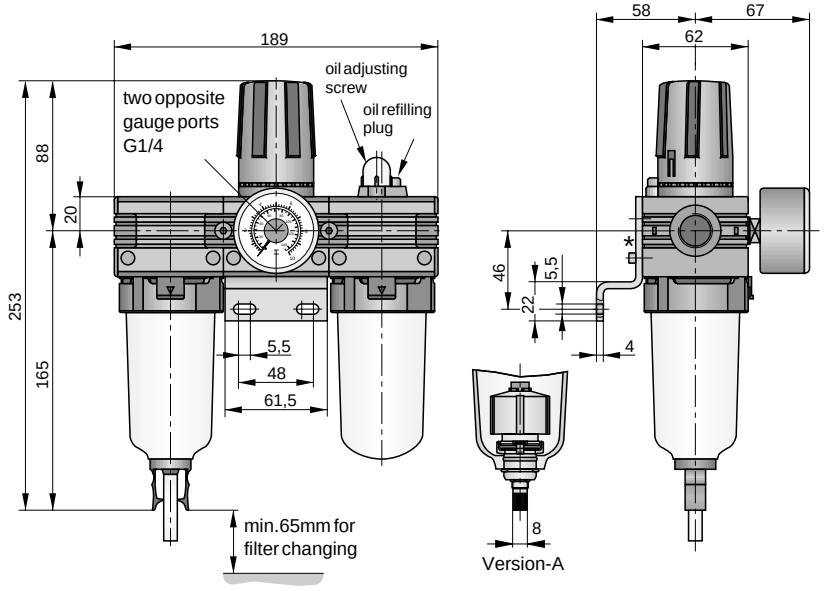

*) On delivery the plug screw is not assembled.

Accessories

Bowl guard kit
For further details see 5.21.013E

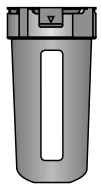

Order No.: PL 17680

Porting block kit
to provide unlubricated air.
For further details see 5.21.012E

Order No.: PL 17607

3/2 way shut-off valve

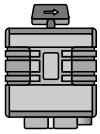

Order No.: PB 56849-000
PB 56949-000

Order Instructions

Description	Port size	Type	Order No.
Basic model	G3/8	**CFRL-3/8**	**PB 58249-000**
Basic model	G1/2	**CFRL-1/2**	**PB 58349-000**
With semiautomatic drainage	G3/8	**CFRL-3/8-H**	**PB 58249-001**
With semiautomatic drainage	G1/2	**CFRL-1/2-H**	**PB 58349-001**
With automatic drainage	G3/8	**CFRL-3/8-A**	**PB 58249-002**
With automatic drainage	G1/2	**CFRL-1/2-A**	**PB 58349-002**
With metal bowl	G3/8	**CFRL -3/8-D**	**PB 58249-003**
With metal bowl	G1/2	**CFRL-1/2-D**	**PB 58349-003**
With metal bowl (sight glass)	G3/8	**CFRL-3/8-E**	**PB 58249-004**
With metal bowl (sight glass)	G1/2	**CFRL-1/2-E**	**PB 58349-004**
With metal bowl and automatic drainage	G3/8	**CFRL-3/8-AD**	**PB 58249-005**
With metal bowl and automatic drainage	G1/2	**CFRL-1/2-AD**	**PB 58349-005**
With metal bowl (sight glass) and automatic drainage	G3/8	**CFRL-3/8-AE**	**PB 58249-006**
With metal bowl (sight glass) and automatic drainage	G1/2	**CFRL-1/2-AE**	**PB 58349-006**

Accessories

Description	Order No.
Bowl guard kit	**PL 17680**
Porting block kit G1/2/G1/4	**PL 17607**
Porting block kit G1/2 with holes for mounting pressure switch (6.00.003E)	**PL 17609**
Regulator spring for operating pressure 4 bar	**PL 17748**
Regulator spring for operating pressure 10 bar	**PL17705**
3/2 way shut-off valve (spool type) CDV-3/8-XS / CDV-1/2-XS	**PB 56849-000, PB 56949-000**
Coupling kit	**PL 17608**
Solvent resistant sight glass	**PL 07233**
Adapter kit G3/4	**PL 17682**

Air Preparation Unit

G3/8, G1/2

airfit comfort

CKL ...

Characteristics			Pressures quoted as gauge pressure	
System			Air preparation unit comprising filter-regulator and oil mist lubricator *)	
Type			**CKL-3/8**	**CKL-1/2**
Port size			**G3/8**	**G1/2**
Max. condensate capacity		cm^3	57	
Condensate drainage			Standard: manual, semiautomatic with pressure relief, fully automatic (float type)	
Max. oil capacity		cm^3	112	
Oil refilling			Standard: manual - also during operation	
Installation			Vertical	
Medium and ambient temperatures	ϑ_{min} ϑ_{max}	°C °C	0 +50 at 10 bar (further temperatures on request)	
Weight (mass)		kg	1.5	
Pneumatic Characteristic[1]				
Operating pressure range - inlet pressure	$p_{1\,min}$ $p_{1\,max}$	bar bar	0 16	
Operating pressure range - outlet pressure	$p_{2\,min}$ $p_{2\,max}$	bar bar	0.5 on request 8	0.5 0.5[3] 4 10
Recommended flow[2]	Q_n	l/min m^3/h	**850** **51**	**1900** **114**
Maximum flow[4]	Q_{max}	l/min m^3/h	1900 114	1950 117

1) For further characteristics see 5.19.008E, 5.19.015E
2) at 6 bar and 25 m/s
3) By the use of special springs, the outlet pressure can be precisely regulated in the specified p_2 range
4) at p_1 = 10 bar and p_2 = 6.3 bar, Δp = 1 bar
*) Use only recommended oils with viscosity VG32 to ISO 3448 (32 mm^2/s at 40°C) or HOERBIGER special oil, Order No.: KY 8766 (Cat.-No. 5.61.050E)

Air preparation unit comprising:

Filter-water-separator
Oil mist lubricator
Gauge
Mounting bracket

- Easy and quick installation of mounting kit
- Suitable for direct wall mounting
- Modern design
- Version with NPTF thread

Flow Characteristics

Type: CKL-1/2

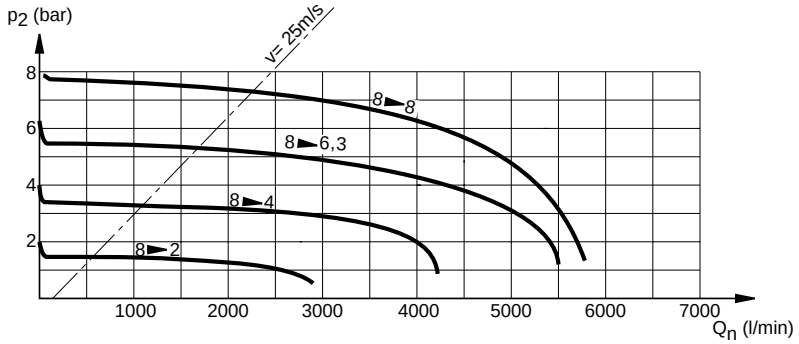

For single units see 5.19.004E-5.19.011E
For air preparation units see 5.19.002E, 5.19.003E
For product group list see 5.19.001E

Data Sheet No. 5.19.003E-1

A1P554E00KY00X

The right to introduce technical modifications is reserved

HOERBIGER ORIGA

Dimensions (mm)

Type: CKL-1/2

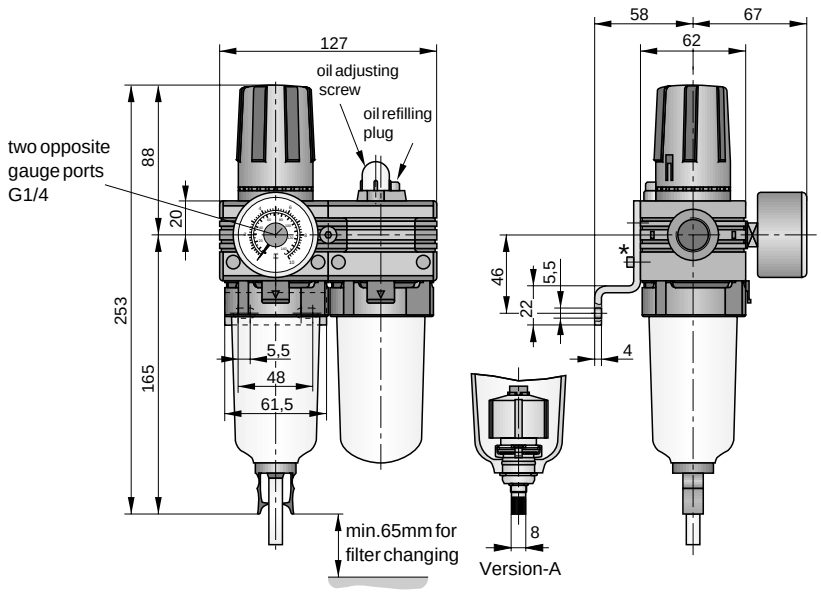

*) On delivery the plug screw is not assembled.

Accessories

Bowl guard kit
For further details see 5.21.013E

Order No.: PL 17680

Porting block kit
to provide unlubricated air.
For further details see 5.21.012E

Order No.: PL 17607

3/2 way shut-off valve

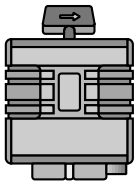

Order No.: PB 56849-000
PB 56949-000

Order Instructions

Description	Port size	Type	Order No.
Basic model	G3/8	**CKL-3/8**	**PB 58549-000**
Basic model	G1/2	**CKL-1/2**	**PB 58649-000**
With semiautomatic drainage	G3/8	**CKL-3/8-H**	**PB 58549-001**
With semiautomatic drainage	G1/2	**CKL-1/2-H**	**PB58649-001**
With automatic drainage	G3/8	**CKL-3/8-A**	**PB 58549-002**
With automatic drainage	G1/2	**CKL-1/2-A**	**PB 58649-002**
With metal bowl	G3/8	**CKL -3/8-D**	**PB 58549-003**
With metal bowl	G1/2	**CKL-1/2-D**	**PB 58649-003**
With metal bowl (sight glass)	G3/8	**CKL-3/8-E**	**PB 58549-004**
With metal bowl (sight glass)	G1/2	**CKL-1/2-E**	**PB 58649-004**
With metal bowl and automatic drainage	G3/8	**CKL-3/8-AD**	**PB 58549-005**
With metal bowl and automatic drainage	G1/2	**CKL-1/2-AD**	**PB 58649-005**
With metal bowl (sight glass) and automatic drainage	G3/8	**CKL-3/8-AE**	**PB 58549-006**
With metal bowl (sight glass) and automatic drainage	G1/2	**CKL-1/2-AE**	**PB 58649-006**

Accessories

Description	Order No.
Bowl guard kit	**PL 17680**
Porting block kit G1/2/G1/4	**PL 17607**
Porting block kit G1/2 with holes for mounting pressure switch (6.00.003E)	**PL 17609**
Regulator spring for operating pressure 4 bar	**PL 17748**
Regulator spring for operating pressure 10 bar	**PL17705**
3/2 way shut-off valve (spool type) CDV-3/8-XS / CDV-1/2-XS	**PB 56849-000, PB 56949-000**
Coupling kit	**PL 17608**
Solvent resistant sight glass	**PL 07233**
Adapter kit G3/4	**PL 17682**

Filter-Regulator

G3/8, G1/2

Pressure regulating valve with filter-water-separator

Degree of moisture separation 95%

airfit comfort

CK ...

Characteristics			Pressures quoted as gauge pressure	
System			Cyclone system with filter element, combined with diaphragm-type pressure regulating valve (spring loaded) with flow compensation and secondary pressure relief	
Type			**CK-3/8**	**CK-1/2**
Port size			**G3/8**	**G1/2**
Pore size of filter element		µm	Standard: 30 (white) 5 (yellow)	
Max. condensate capacity		cm^3	57	
Condensate drainage			Standard: manual semiautomatic with pressure relief or fully automatic (float-type)	
Installation			Vertical	
Medium and ambient temperatures	ϑ_{min} ϑ_{max}	°C °C	0 +50 at 10 bar (further temperatures on request)	
Weight (mass)		kg	0.75	
Pneumatic Characteristic				
Operating pressure range - inlet pressure	$p_{1\,min}$ $p_{1\,max}$	bar bar	0 16	
Operating pressure range - outlet pressure	$p_{2\,min}$ $p_{2\,max}$	bar bar	0.5 on request 8	0.5 0.5[2)] 4 10
Min. pressure difference	p_1-p_2	bar	0.2	
Hysteresis p_1=10/p_2=0 Hysteresis p_1=10/p_2=8		bar bar	0.9 0.7	
Recommended flow[1)]	Q_n	l/min m^3/h	**850** **51**	**1900** **114**
Maximum flow[3)]	Q_{max}	l/min m^3/h	3000 180	3300 198
Degree of moisture separation at recommended flow	η	%	95	95

1) at p_2 = 6 bar and 25 m/s
2) By the use of special springs, the outlet pressure can be precisely regulated in the specified p_2 range
3) at p_1 = 10 bar and p_2 = 6.3 bar, Δp = 1 bar

Flow Characteristics

Type: CK-1/2

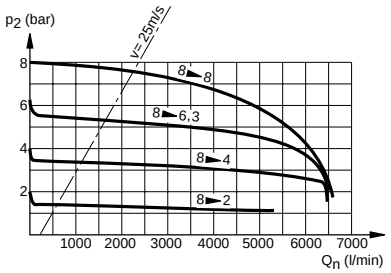

Outlet Pressure Variation with Fluctuation Inlet Pressure

Type: CK-1/2

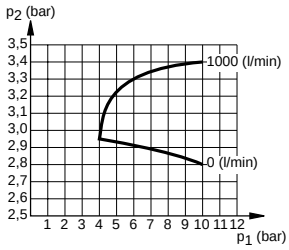

Filter-regulator with flow compensation and secondary pressure relief, hand wheel lockable

- Easy and quick installation of mounting kit
- Suitable for direct wall mounting
- Modern design
- Version with NPTF thread

For single units see 5.19.004E-5.19.011E
For air preparation units see 5.19.002E, 5.19.003E
For product group list see 5.19.001E

Data Sheet No. 5.19.004E-1

A1P555E00KY00X

The right to introduce technical modifications is reserved

HOERBIGER ORIGA

Dimensions (mm)

Type: CK-3/8, 1/2

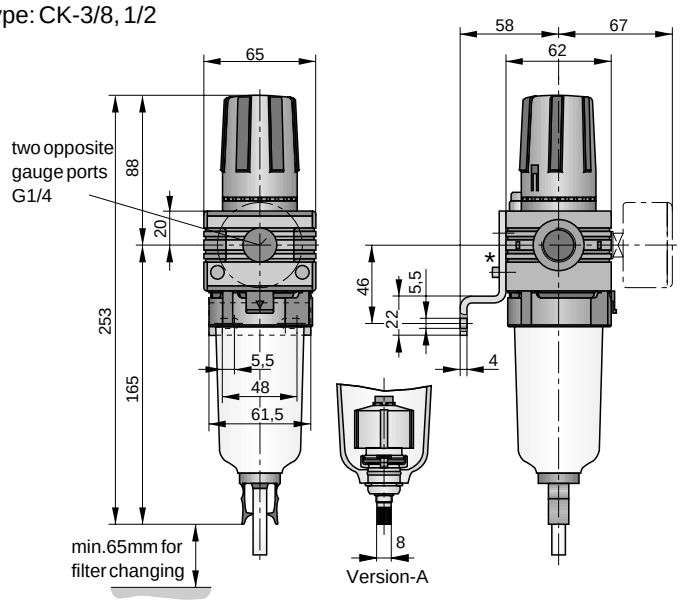

*) On delivery the plug screw is not assembled.

Accessories

Bowl guard kit
For further details see 5.21.013E

Order No.: PL 17680

Gauge

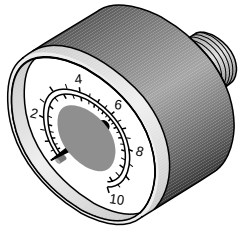

Order No.: KG 8011

Order Instructions

Description	Port size	Type	Order No.
Basic model (30 µm)	G3/8	**CK-3/8**	**PB 55849-000**
Basic model (30 µm)	G1/2	**CK-1/2**	**PB 55949-000**
With filter element 5 µm	G3/8	**CK-3/8-5**	**PB 55849-016**
With filter element 5 µm	G1/2	**CK-1/2-5**	**PB 55949-016**
With semiautomatic drainage	G3/8	**CK-3/8-H**	**PB 55849-001**
With semiautomatic drainage	G1/2	**CK-1/2-H**	**PB 55949-001**
With automatic drainage	G3/8	**CK-3/8-A**	**PB 55849-002**
With automatic drainage	G1/2	**CK-1/2-A**	**PB 55949-002**
With metal bowl	G3/8	**CK-3/8-D**	**PB 55849-003**
With metal bowl	G1/2	**CK-1/2-D**	**PB 55949-003**
With metal bowl (sight glass)	G3/8	**CK-3/8-E**	**PB 55849-004**
With metal bowl (sight glass)	G1/2	**CK-1/2-E**	**PB 55949-004**
With metal bowl and automatic drainage	G3/8	**CK-3/8-AD**	**PB 55849-005**
With metal bowl and automatic drainage	G1/2	**CK-1/2-AD**	**PB 55949-005**
With metal bowl (sight glass) and automatic drainage	G3/8	**CK-3/8-AE**	**PB 55849-006**
With metal bowl (sight glass) and automatic drainage	G1/2	**CK-1/2-AE**	**PB 55949-006**

Accessories

Description	Order No.
Bowl guard kit	**PL 17680**
Gauge Ø 50, 0-10 bar, G1/4	**KG 8011**
Mounting kit	**PL 17518**
Porting block kit G1/2/G1/4	**PL 17607**
Porting block kit G1/2 with holes for mounting pressure switch (6.00.003E)	**PL 17609**
Regulator spring for operating pressure 4 bar	**PL 17748**
Regulator spring for operating pressure 10 bar	**PL17705**
3/2 way shut-off valve (spool type) CDV-3/8-XS / CDV-1/2-XS	**PB 56849-000, PB 56949-000**
Coupling kit	**PL 17608**
Solvent resistant sight glass	**PL 07233**
Adapter kit G3/4	**PL 17682**

Filter-Water-Separator, Dust Filter

G3/8, G1/2

Degree of moisture separation 95%

airfit **comfort**

CF

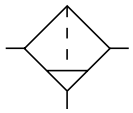

CFD

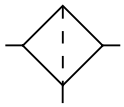

Characteristics			Pressures quoted as gauge pressure			
System			Cyclone system and filter element		Dust filter	
Type			**CF-3/8**	**CF-1/2**	**CFD-3/8**	**CFD-1/2**
Port size			**G3/8**	**G1/2**	**G3/8**	**G1/2**
Max. condensate capacity		cm^3	57			
Pore size of filter element		µm	Standard: 30: white 5: yellow		Standard: 1	
Condensate drainage			Standard: manual, semiautomatic with pressure relief or fully automatic		manual	
Installation			Vertical			
Medium and ambient temperatures	ϑ_{min} ϑ_{max}	°C °C	0 +50 at 10 bar	(further temperatures on request)		
Weight (mass)		kg	0.55			
Pneumatic Characteristic						
Operating pressure range	p_{min} p_{max}	bar bar	0 16			
Recommended flow[1)]	Q_n	l/min m^3/h	**850** **51**	**1900** **114**	**850** **51**	**1900** **114**
Maximum Flow[2)]	Q_{max}	l/min m^3/h	4500 270	5000 300	4130 248	4820 289
Degree of moisture separation at recommended flow	η	%	95		only solid particles >99% related to 1 µm	

1) at 6 bar and 25 m/s
2) at p_1 = 6.3 bar, Δp = 1 bar

CF:
Filter-water-separator with cyclone system and filter element.

CFD:
Dust filter with large filter surface for long service life. For compressed air systems with air dryers.

- Easy and quick installation of mounting kit
- Suitable for direct wall mounting
- Modern design
- Version with NPTF thread

Flow Characteristics

Type: CF-1/2

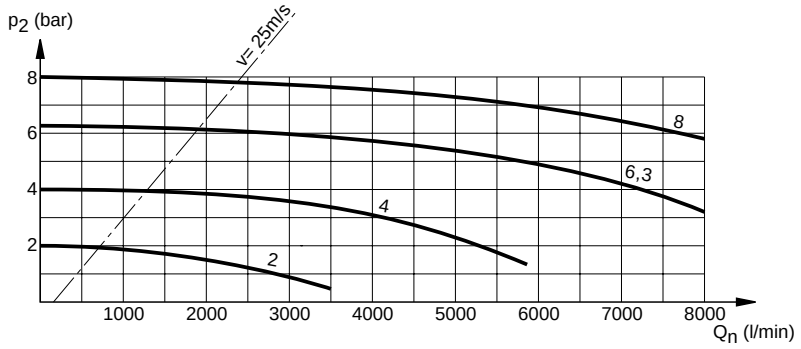

For single units see 5.19.004E-5.19.011E
For accessories see 5.21.012E-5.21.013E
For air preparation units see 5.19.002E, 5.19.003E
For product group list see 5.19.001E

Data Sheet No. 5.19.005E-1

A1P549E00KY00X

The right to introduce technical modifications is reserved

HOERBIGER ORIGA

Dimensions (mm)

Type: CF-3/8, CF-1/2

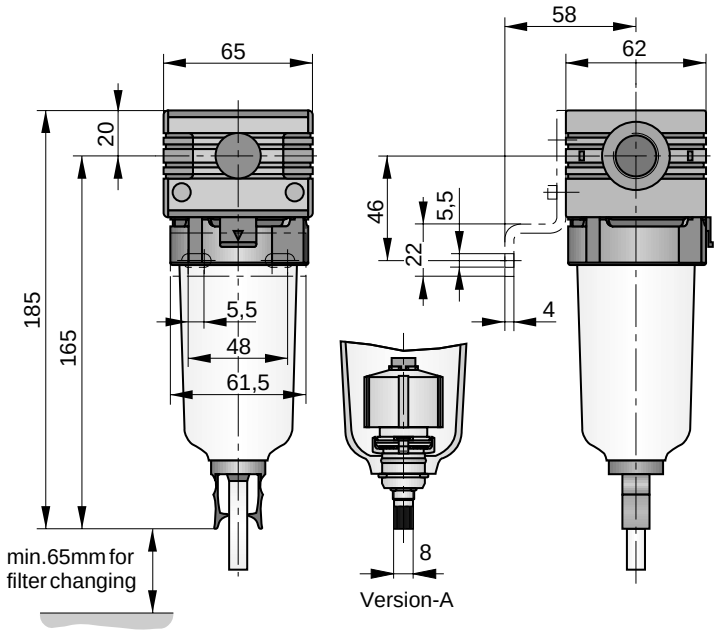

Accessories

Coupling kit

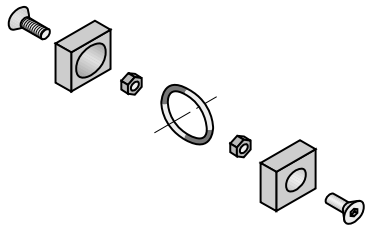

Order No.: PL 17608

Bowl guard kit
For further details see 5.21.013E

Order No.: PL 17680

Order Instructions

Description	Port size	Type	Order No.
Basic model (30 µm)	G3/8	**CF-3/8**	**PB 55249-000**
Basic model (30 µm)	G1/2	**CF-1/2**	**PB 55349-000**
With filter element 5 µm	G3/8	**CF-3/8-5**	**PB 55249-016**
With filter element 5 µm	G1/2	**CF-1/2-5**	**PB 55349-016**
With semiautomatic drainage	G3/8	**CF-3/8-H**	**PB 55249-001**
With semiautomatic drainage	G1/2	**CF-1/2-H**	**PB 55349-001**
With automatic drainage	G3/8	**CF-3/8-A**	**PB 55249-002**
With automatic drainage	G1/2	**CF-1/2-A**	**PB 55349-002**
With metal bowl	G3/8	**CF-3/8-D**	**PB 55249-003**
With metal bowl	G1/2	**CF-1/2-D**	**PB 55349-003**
With metal bowl (sight glass)	G3/8	**CF-3/8-E**	**PB 55249-004**
With metal bowl (sight glass)	G1/2	**CF-1/2-E**	**PB 55349-004**
With metal bowl and automatic drainage	G3/8	**CF-3/8-AD**	**PB 55249-005**
With metal bowl and automatischer Kondensatentleerung	G1/2	**CF-1/2-AD**	**PB 55349-005**
With metal bowl (sight glass) and automatic drainage	G3/8	**CF-3/8-AE**	**PB 55249-006**
With metal bowl (sight glass) and automatic drainage	G1/2	**CF-1/2-AE**	**PB 55349-006**
With filter element 1 µm	G3/8	**CFD-3/8-1**	**PB 55249-070**
With filter element 1 µm	G1/2	**CFD-1/2-1**	**PB 55349-070**

Accessories

Description	Order No.
Bowl guard kit	**PL17680**
Mounting kit	**PL 17518**
Coupling kit	**PL 17608**
Porting block kit G1/2/G1/4	**PL 17607**
Porting block kit G1/2 with holes for mounting pressure switch (6.00.003E)	**PL 17609**
3/2 way shut-off valve (spool type) CDV-3/8-XS / CDV-1/2-XS	**PB 56849-000, PB 56949-000**
Adapter kt G3/4	**PL 17682**

Pressure Regulating Valve

G3/8, G1/2

airfit comfort

CR..

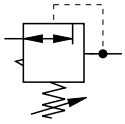

Characteristics			Pressures quoted as gauge pressure	
System			Diaphragm-type pressure regulating valve (spring loaded) with flow compensation and secondary pressure relief	
Type			**CR-3/8**	**CR-1/2**
Port size			**G3/8**	**G1/2**
Installation			In any position	
Medium and ambient temperatures	ϑ_{min} ϑ_{max}	°C °C	0 +60	(further temperatures on request)
Weight (mass)		kg	0.55	
Pneumatic Characteristic				
Operating pressure range - inlet pressure	$p_{1\,min}$ $p_{1\,max}$	bar bar	0 16	
Operating pressure range - outlet pressure	$p_{2\,min}$ $p_{2\,max}$	bar bar	0.5 on request 8	0.5 0.5[2)] 4 10
Min. pressure difference	p_1-p_2	bar	0.2	
Hysteresis p_1=10/p_2=0 Hysteresis p_1=10/p_2=8		bar bar	0.9 0.7	
Recommended flow[1)]	Q_n	l/min m³/h	**850** **51**	**1900** **114**
Maximum flow[3)]	Q_{max}	l/min m³/h	4200 252	5700 342

1) at p_2 = 6 bar and 25 m/s
2) By the use of special springs, the outlet pressure can be precisely regulated in the specified p_2 range
3) at p_1 = 10 bar and p_2 = 6.3 bar, Δp = 1 bar

Pressure Regulator with High Relief Capacity

Type: CR-1/2SO
PB 55649-023

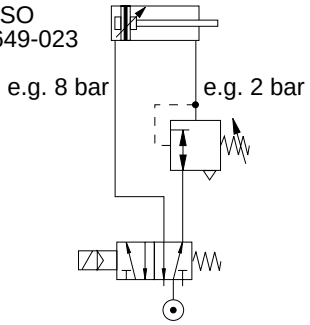

Example:
To regulate the pressure in the direction of the stroke, install the regulator as shown in the diagram. The pressure relief uses the full cross-section of the valve, allowing the cylinder to travel at full speed.

Flow Characteristics

Type: CR-1/2

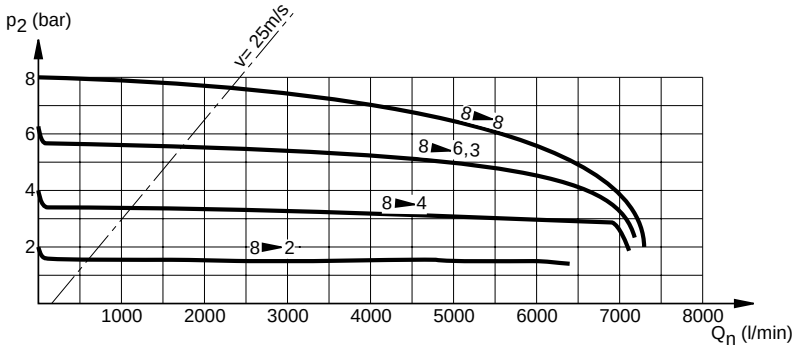

Diaphragm-type pressure regulating valve (spring loaded) flow compensation and with secondary pressure relief, handwheel lockable

- Easy and quick installation of mounting kit
- Suitable for direct wall mounting
- Modern design
- Version with NPTF thread

For single units see 5.19.004E-5.19.011E
For Accessories see 5.21.012E-5.21.013E
For air preparation units see 5.19.002E, 5.19.003E
For product group list see 5.19.001E

A1P545E00KY00X

The right to introduce technical modifications is reserved

HOERBIGER ORIGA

Accessories

Gauge
Ø 50, 0-10 bar, G1/4

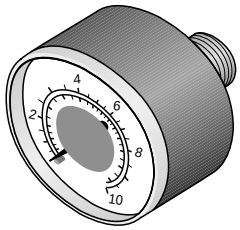

Order No.: KG 8011

Accessories

Coupling kit
for connecting 2 single units

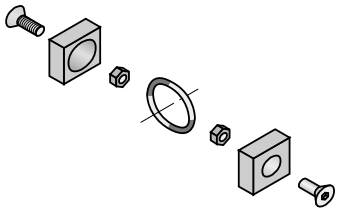

Order No.: PL 17608

Outlet Pressure Variation with Fluctuacting Inlet Pressure

Type: CR-1/2

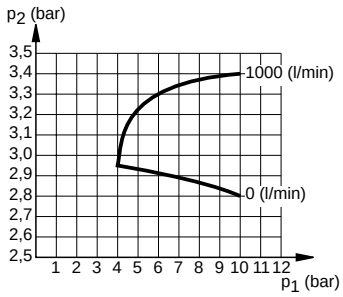

Dimensions (mm)

Type: CR-1/2

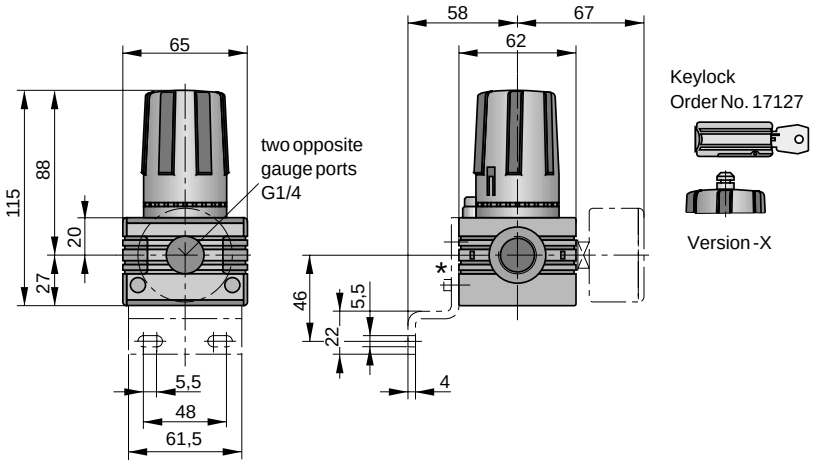

*) On delivery the plug screw is not assembled.

Order Instructions

Description	Port size	**Type**	**Order No.**
Basic model	G3/8	**CR-3/8**	**PB 55549-000**
	G1/2	**CR-1/2**	**PB 55649-000**
With adapter for keylock	G3/8	**CR-3/8-X**	**PB 55549-006**
	G1/2	**CR-1/2-X**	**PB 55649-006**

Accessories

Description	**Order No.**
Gauge Ø 50, 0-10 bar, G1/4	**KG 8011**
Mounting kit	**PL 17518**
Coupling kit	**PL 17608**
Porting block kit G1/2/G1/4	**PL 17607**
Porting block kit G1/2 with holes for mounting pressure switch (6.00.003E)	**PL 17609**
Keylock	**PL 17127**
Regulator spring for operating pressure 4 bar	**PL 17748**
Regulator spring for operating pressure 10bar	**PL 17705**
3/2 way shut-off valve CDV-3/8-XS / CDV-1/2-XS, spool type	**PB 56849-000, PB 56949-000**
Adapter kit G3/4	**PL 17682**

Pressure Regulating Valve

with through p_1 supply port G1/2

airfit comfort

CR-1/2-T

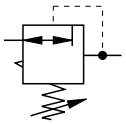

Characteristics			Pressures quoted as gauge pressure
System			Diaphragm-type pressure regulating valve (spring loaded) with flow compensation and secondary pressure relief
Type			**CR-1/2-T**
Port size			**G1/2**
Installation			In any position
Medium and ambient temperatures	ϑ_{min} ϑ_{max}	°C °C	0 +60 (further temperatures on request)
Weight (mass)		kg	0.55
Pneumatic Characteristic			
Operating pressure range - inlet pressure	$p_{1\,min}$ $p_{1\,max}$	bar bar	0 16
Operating pressure range - outlet pressure	$p_{2\,min}$ $p_{2\,max}$	bar bar	0.5 on request 0.5 0.5[1)] 8 4 10
Min. pressure difference	p_1-p_2	bar	0.2
Hysteresis p_1=10/p_2=0 Hysteresis p_1=10/p_2=8		bar bar	0.9 0.7

[1)] By the use of special springs, the outlet pressure can be precisely regulated in the specified p_2 range

Installation Instructions for Battery Mounting

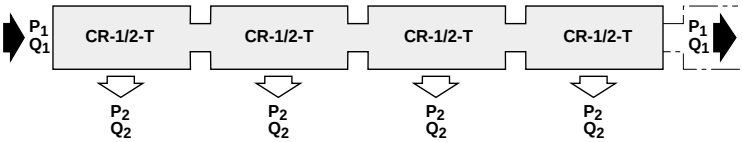

Diaphragm-type pressure regulating valve (spring loaded) flow compensation and with secondary pressure relief, handwheel lockable

- With through p_1 supply port
- Infinitely expandable
- Controlled
- Eas and quick installation of mounting kit
- Suitable for direct wall mounting
- Modern design
- Version with NPTF thread

For single units see 5.19.004E-5.19.011E
For air preparation units see 5.19.002E, 5.19.003E
For product group list see 5.19.001E

A1P548E00KY00X

The right to introduce technical modifications is reserved

HOERBIGER ORIGA

Accessories

Gauge
Ø 50, 0-10 bar, G1/4

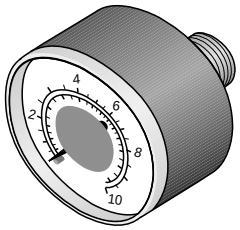

Order No.: KG 8011

Accessories

Coupling kit
for connecting 2 single units

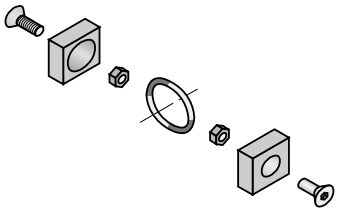

Order No.: PL 17608

Dimensions (mm)

Type: CR-1/2-T

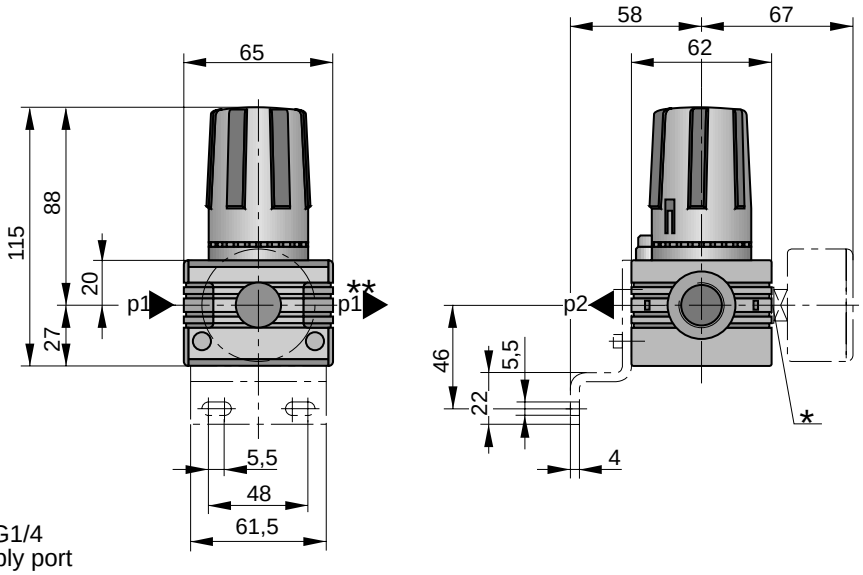

* Gauge connection G1/4
** with through p_1 supply port

Order Instructions

Description	Port size	Type	Order No.
Pressure regulating valve	p_1-G1/2, through p_2-G3/8, outlet	**CR-1/2-T 3/8**	**PB 55649-101**
	p_2-G1/2, outlet	**CR-1/2-T 1/2**	**PB 55649-100**

Accessories

Description	Order No.
Gauge Ø 50, 0-10 bar, G1/4	**KG 8011**
Gauge , Ø 50, 0-10 bar, G1/4, bottom connection	**KZ 8821**
Mounting kit	**PL 17518**
Coupling kit	**PL 17608**
Porting block kit G1/2/G1/4	**PL 17607**
Porting block kit G1/2 with holes for mounting pressure switch (6.00.003E)	**PL 17609**
Regulator spring for operating pressure 4 bar	**PL 17748**
Regulator spring for operating pressure 10bar	**PL 17705**
3/2-Wege-Absperrventil (spool type) CDV-3/8-XS / CDV-1/2-XS	**PB 56849-000, PB 56949-000**
Adapter kit G3/4	**PL 17682**

Pressure Regulating Valve

with customer adjustable maximal pressure limiter "airfix" G3/8, G1/2

airfit comfort

CR-3/8-L
CR-1/2-L

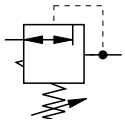

Patented

Characteristics			Pressures quoted as gauge pressure	
System			Specially designed pressure regulating valve with maximal pressure limiter, easily adjustable by customer.	
Regulator spring		bar	8 (standard)	4
Operating pressure range - outlet pressure	$p_{2\,min}$ $p_{2\,max}$	bar bar	0.5 2 – 7.5 (0.5 – 6.2)	0.5 1.5 – 4

For further technical data and information, please refer to the data sheet of the standard pressure regulator CR-.., data sheet no. 5.19.006E

Installation Instructions

This pressure regulating valve was specially designed to allow the customer to limit the maximal pressure of his system.
the handwheel is not assembled on delivery, and can only be mounted after the pressure has been set and tested.
The pressure limit cannot be changed without disassembly of the handwheel.

Pressure adjustment:
After the unit is installed and air pressure is applied, maximum pressure can be set with a spanner size 10.
When the pressure is set correctly, keep the spanner in place and use an Allan key size 3 to turn the adjustment screw clockwise untill it is fixed.
Once the screw is fixed, do not tighten it unnecessarily.
Lower the pressure with the spanner, and then raise it to the set limit.
Once the maximal pressure is set ok, the handwheel can be snapped into position.
Push the handwheel over the bell and gently turn it left and right, so that the square part of the pressure adjustment system falls into place.
Next, push the wheel further down, untill it snaps into place.
The wheel is now locked in position and the pressure can be adjusted in the set range.

Please note the installation instructions that are included with delivery of each of out air preparation units.

Function

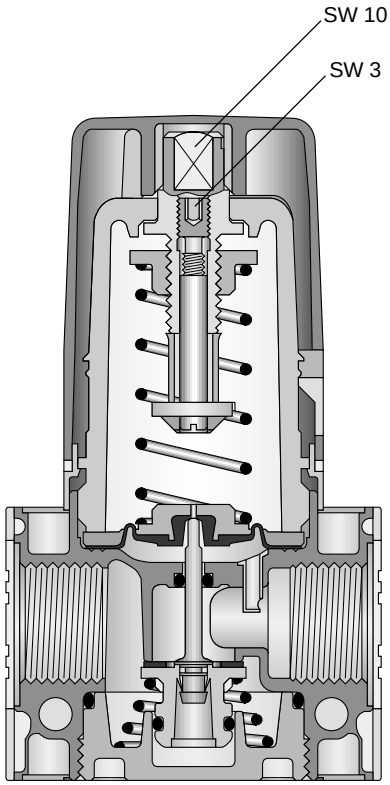

Order Instructions

Description	Port size	Type	Order No.
Pressure regulating valve with pressure limiter "AIRFIX" – Standard version	G3/8	**CR-3/8-L**	**PB 55549-005**
	G1/2	**CR-1/2-L**	**PB 55649-005**
– Option: p_2 0.5 – 6.2 bar	G3/8	**CR-3/8-L-SO**	**PB 55549-028**
	G1/2	**CR-1/2-L-SO**	**PB 55649-028**
Accessories			
Regulator spring 4 bar			**PL 17748**
Adapter kit G3/4			**PL 17682**

Diaphragm-type pressure regulating valve (spring loaded) flow compensation and with secondary pressure relief, handwheel lockable

- Easy and quick installation of mounting kit
- Suitable for direct wall mounting
- Modern design
- Version with NPTF thread

For single units see 5.19.004E-5.19.011E
For air preparation units see 5.19.002E, 5.19.003E
For product group list see 5.19.001E

Data Sheet No. 5.19.008E

HOERBIGER ORIGA

A1P545E00KY00X

The right to introduce technical modifications is reserved

Oil Mist Lubricator

G3/8, G1/2

airfit comfort

CL

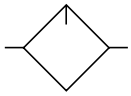

Characteristics			Pressures quoted as gauge pressure	
System			Oil mist lubricator with flow compensatio	
Type			**CL-3/8**	**CL-1/2**
Port size			**G3/8**	**G1/2**
Oil/air ratio			Degressive (number of drops per minute remains constant)	
Max. oil capacity		cm^3	112	
Oil refilling*)			Standard: manual - also during operation	
Installation			Vertical	
Medium and ambient temperatures	ϑ_{min} ϑ_{max}	°C °C	0 +50 at 10 bar	(further temperatures on request)
Weight (mass)		kg	0.55	
Pneumatic Characteristic				
Operating pressure range	p_{min} p_{max}	bar bar	0 16	
Recommended flow[1)]	Q_n	l/min m^3/h	**850** **51**	**1900** **114**
Maximum Flow[2)]	Q_{max}	l/min m^3/h	5000 300	5300 318
Recommended operating range	Q_n	l/min m^3/h	33-833 2-50	33-2000 2-120

1) at 6 bar and 25 m/s
2) at p_1 = 6,3 bar, Δp = 1 bar
*) Use only recommended oils with viscosity VG32 to ISO 3448 (32 mm^2/s at 40°C) or HOERBIGER special oil, Order No.: KY 8766 (Cat.-No. 5.61.050E)

A1P546E00KY00X

Flow Characteristics

Type: CL-1/2

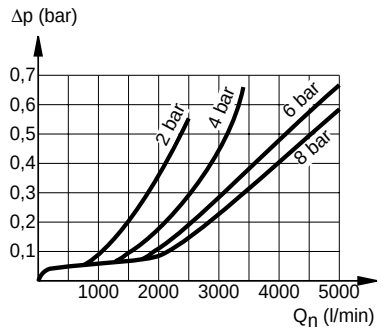

Oil/Air Ratio

Type: CL-1/2

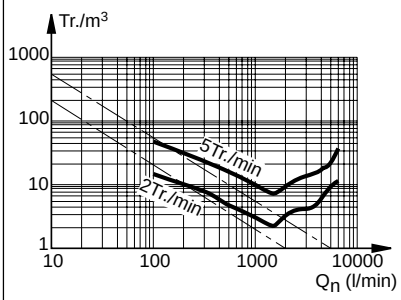

Oil mist lubricator with flow compensation (number of drops per minute is constant)

- Easy and quick installation of mounting kit
- Suitable for direct wall mounting
- Modern design
- Version with NPTF thread

The right to introduce technical modifications is reserved

For single units see 5.19.004E-5.19.011E
For Accessories see 5.21.012E-5.21.013E
For air preparation units see 5.19.002E, 5.19.003E
For product group list see 5.19.001E

HOERBIGER ORIGA

Accessories

Solvent resistant sight glass

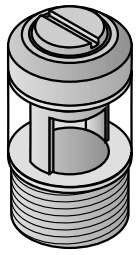

Order No.: PL 07233

Accessories

Bowl Guard Kit
For further details see 5.21.013E

Order No.: PL 17680

Min. Operating Conditions

Type: CL-1/2

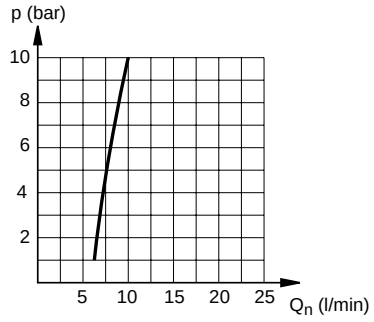

Dimensions (mm)

Type: CL-1/2

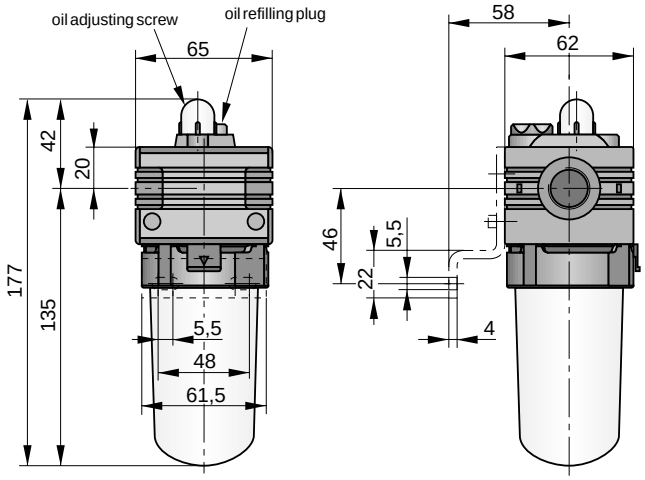

Order Instructions

Description	Port size	**Type**	**Order No.**
Basic model	G3/8	**CL-3/8**	**PB 56249-000**
Basic model	G1/2	**CL-1/2**	**PB 56349-000**
With metal bowl	G3/8	**CL-3/8-D**	**PB 56249-003**
With metal bowl	G1/2	**CL-1/2-D**	**PB 56349-003**
With metal bowl (sight glass)	G3/8	**CL-3/8-E**	**PB 56249-004**
With metal bowl (sight glass)	G1/2	**CL-1/2-E**	**PB 56349-004**

Accessories

Description	**Bestell-Nr.**
Bowl guard kit	**PL17680**
Mounting kit	**PL 17518**
Coupling kit	**PL 17608**
Porting block kit G1/2/G1/4	**PL 17607**
Porting block kit G1/2 with holes for mounting pressure switch (6.00.003E)	**PL 17609**
Solvent resistant sight glass	**PL 07233**
3/2-way shut-off valve CDV-3/8-XS / CDV-1/2-XS, spool type	**PB 56849-000, PB 56949-000**
Adaptersatz G3/4	**PL 17682**

Pressure Regulating Valve

G1/2

airfit

XR

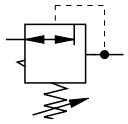

Characteristics			Pressures quoted as gauge pressure
System			Piston-type pressure regulating valve (pilot operated) with secondary pressure relief and flow compensation
Type			**XR-15**
Port size			**G1/2**
Installation			In any position
Medium and ambient temperatures	ϑ_{min} ϑ_{max}	°C °C	0 +60 (further temperatures on request)
Weight (mass)		kg	0.75
Pneumatic Characteristic			
Operating pressure range - inlet pressure	$p_{1\,min}$ $p_{1\,max}$	bar bar	0 16
Operating pressure range - outlet pressure	$p_{2\,min}$ $p_{2\,max}$	bar bar	0.5 10 (16)
Min. pressure difference	p_1-p_2	bar	0.5
Hysteresis p_1=10/p_2=0 Hysteresis p_1=10/p_2=10		bar bar	0.6 0.3
Recommended flow[1)]	Q_n	l/min m³/h	**1900** **114**

[1)] at p_2 = 6 bar and 25 m/s

Flow Characteristics

Type: XR-15

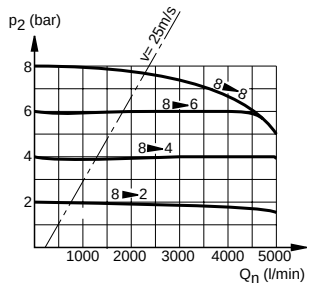

Outlet Pressure Variation with Fluctuating Inlet Pressure

Type: XR-15

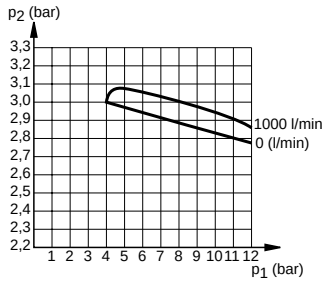

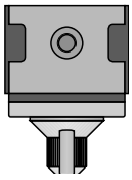

Piston-type pressure regulating valve (pilot operated) with secondary pressure relief and flow compensation

For single units see 5.20.008E-5.20.015E
For accessories see 5.21.001E-5.21.003E
For air preparation units see 5.20.002E- 5.20.005E
For product group list and product range see 5.20.001E

HOERBIGER ORIGA

Data Sheet No. 5.20.012E-1

A1P111E00KY40X

The right to introduce technical modifications is reserved

Accessories

Gauge
Ø 50, 0-10 bar, G1/8

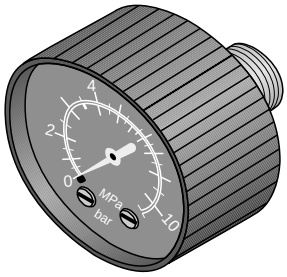

Order No.: KZ 8815

Accessories

Coupling kit
for connecting 2 single units

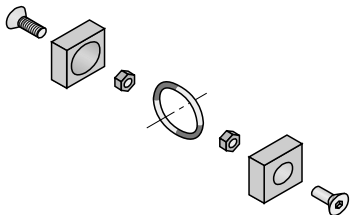

Order No.: PL 08267

Dimensions (mm)

Type: XR-15

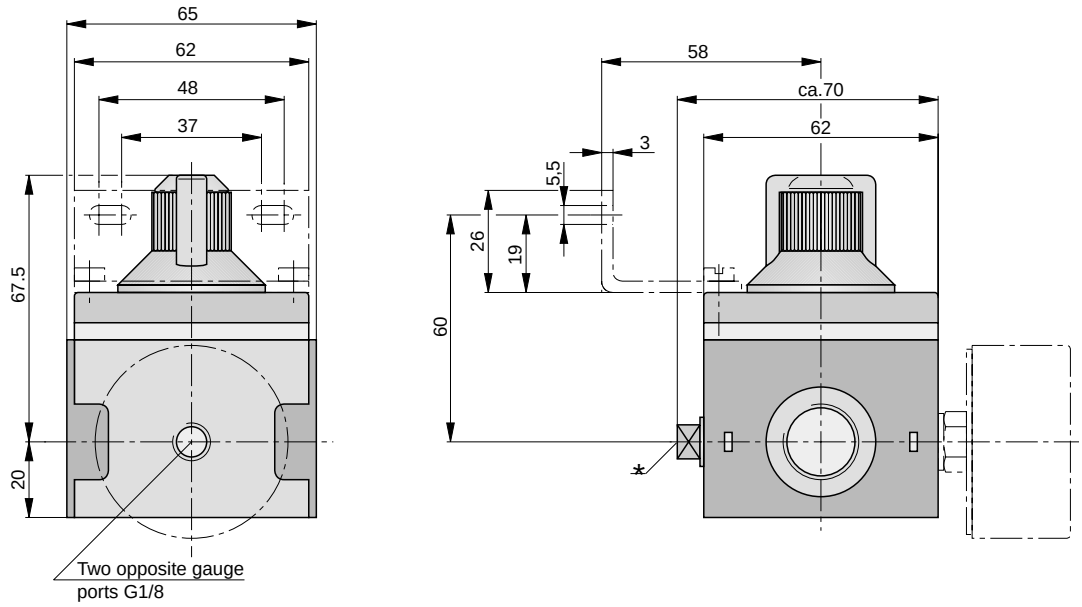

*) On delivery the plug screw is not assembled.

Order Instructions

Description	Port size	**Type**	**Order No.**
Basic model	G1/2	**XR-15**	**PB 10549-000**

Accessories

Description	**Order No.**
Gauge, Ø 50, 0-10 bar, G1/8	**KZ 8815**
Mounting kit	**PL 15169**
Coupling kit	**PL 08267**
Porting block kit G1/2/G1/4	**PL 15003**
Porting block kit G1/2 with holes for mounting pressure switch (6.00.003E)	**PL 16781**
3/2 way shut-off valve XDV-15	**PB 12349-000**
Regulator spring for operating pressure 16 bar	**PL 15758**

Porting Block Kit

G1/4

To provide unlubricated air e.g. for air gun

airfit light
Accessories

Characteristics

Installation	Between 2 units of the aifit light Series
Mounting	With coupling kit supplied
Material	Aluminium, enamelled black

Dimensions (mm)

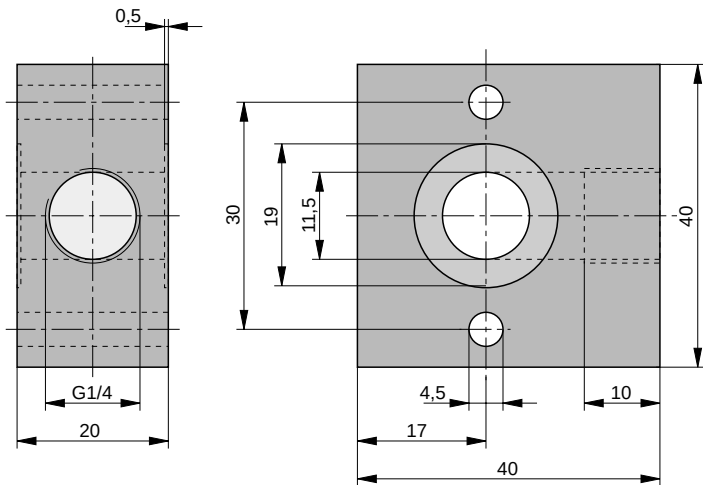

Installation Instructions

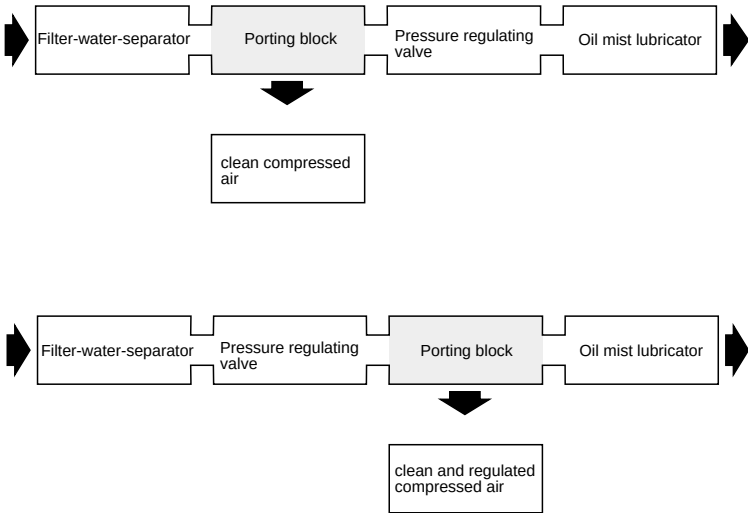

Porting block kit comprising:

Porting block
2 Sealing rings
2 Mounting screws

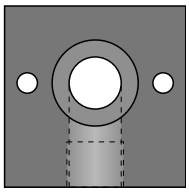

Order No.: PL 16031

For single units see 5.09.004E-5.09.008E
For air preparation units see 5.09.002E, 5.09.003E
For product group list see 5.09.001E

Data Sheet No. 5.21.002E

A1P288E00KY00X

The right to introduce technical modifications is reserved

HOERBIGER ORIGA

Gauge

ø 40, 50, 63 mm

- centre rear connection (standard)
- bottom connection
- for panel mounting

Gauge
centre rear connection

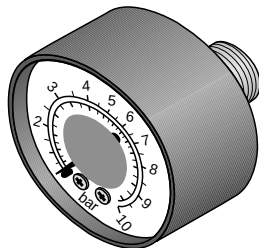

Dimensions

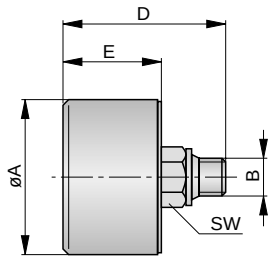

Order Instructions, Dimension Table (mm)

Order Instructions Type	Order No.	Dial range	ØA	B	D	E	SW
111.40.1,6	**KZ 8894**	0 - 1.6 bar	41	G1/8	44	26	14
111.40.2,5	**KZ 8810**	0 - 2.5 bar	41	G1/8	44	26	14
111.40.04	**KZ 8811**	0 - 4 bar	41	G1/8	44	26	14
111.40.06	**KZ 8812**	0 - 6 bar	41	G1/8	44	26	14
111.40.10	**KZ 8813**	0 - 10 bar	41	G1/8	44	26	14
111.40.10	**KZ 8891***	0 - 10 bar	41	G1/8	44	26	14
111.40.16	**KZ 8814**	0 - 16 bar	41	G1/8	44	26	14
111.50.10	**KZ 8815**	0 - 10 bar	49	G1/8	48	27	14
111.50.16	**KZ 8816**	0 - 16 bar	49	G1/8	48	27	14
111.50.10	**KG 8011***	0 - 10 bar	49	G1/4	48	27	14
111.50.10	**KG 8012-00**	0 - 10 bar	49	G1/4	48	27	14
111.50.16	**KG 8013-00**	0 - 16 bar	49	G1/4	48	27	14
111.63.10	**KG 8002***	0 - 10 bar	62	G1/4	49	28	14
111.63.10	**KZ 8817**	0 - 10 bar	62	G1/4	49	28	14
111.63.16	**KZ 8818**	0 - 16 bar	62	G1/4	49	28	14

* HOERBIGER design

Technical data: Class 1.6 (DIN 16005), double scale in bar/psi,
black polymer housing, acrylic glass face

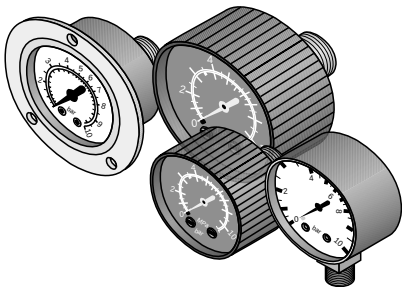

HOERBIGER ORIGA

A1P284E00KY00X

The right to introduce technical modifications is reserved

Gauge with front ring for panel mounting

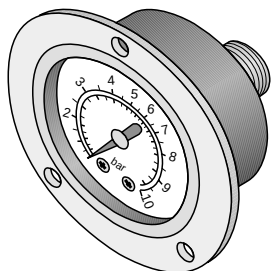

Dimensions

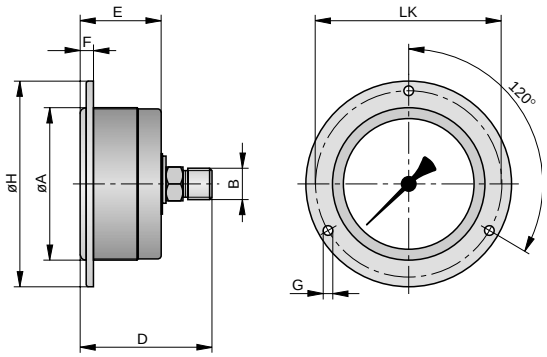

Order Instructions, Dimension Table (mm)

Order Instructions Type	Order No.	Dial range	ØA	B	D	E	F max.	ØG	ØH	ØLK	SW
111.40.10	**KZ 8822**	0 - 10 bar	40	G1/8	45	27	7	3.6	61	51	14
111.50.10	**KZ 8823**	0 - 10 bar	50	G1/8	48	27	7	3.6	71	60	14
111.50.16	**KZ 8824**	0 - 16 bar	50	G1/8	48	27	7	3.6	71	60	14
111.63.04	**KZ 8825**	0 - 4 bar	63	G1/4	48	30	7	3.6	85	75	14
111.63.10	**KZ 8826**	0 - 10 bar	63	G1/4	48	30	7	3.6	85	75	14
111.63.16	**KZ 8827**	0 - 16 bar	63	G1/4	48	30	7	3.6	85	75	14

Technical data: Class 2.5 (DIN 16005), scale in bar,
black polymer housing, acrylic glass face

3/2 Way Shut-off Valve

G3/4, G1

(Ball valve)

Actuation: Rotary switch

airfit PRESTIGE **Accessories**

Characteristics			Pressures quoted as gauge pressure	
System			3/2 way shut-off valve	
Mounting			Direct assembly with any unit of series AIRFIT prestige – with coupling kit	
Type			**XDV-3/4**	**XDV-1**
Port size			**G3/4**	**G1**
Installation			In any position	
Medium and ambient temperatures	ϑ_{min} ϑ_{max}	°C °C	0 +60 at 10 bar	(further temperatures on request)
Weight (mass)		kg	1.8	
Pneumatic Characteristic				
Operating pressure range	$p_{1\ min}$ $p_{1\ max}$	bar bar	0 16	
Recommended flow[1)]	Q_n	l/min m³/h	**3500** **210**	**5000** **300**
Maximum flow	Q_{max}	l/min m³/h	> 20000 > 1200	> 20000 > 1200

[1)] at p_2 = 6.3 bar and 25 m/s

XDV-3/4
XDV-1

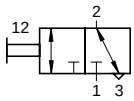

Dimensions (mm)

Standard version
Type: XDV

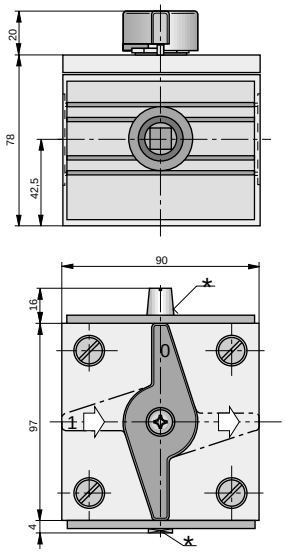

Version X (can be shut off)
Type: XDV-..-X

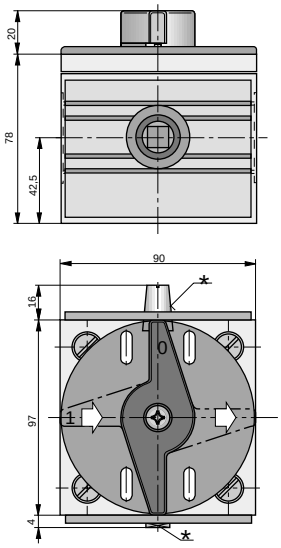

* On delivery the plug screw and silencer are not asembled.

- Rotary switch can be turned 90°
- Indication of positions

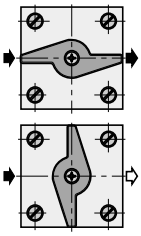

Flow open, exhaust closed

Inlet closed outlet exhausted

- Variante X: can be shut off in 4 different modes
- Flow direction shown by arrow

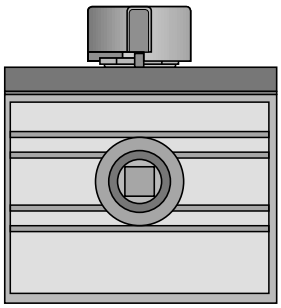

Order Instructions

Description	Port size	**Type**	**Order No.**
Standardversion	G3/4	**XDV-3/4**	**PB 33849-100**
	G1	**XDV-1**	**PB 33949-100**
Version X	G3/4	**XDV-3/4-X**	**PB 33849-101**
(can be shut off by lock)	G1	**XDV-1-X**	**PB 33949-101**

Accessories

Description	**Bestell-Nr.**
Coupling kit	**PL 15670**
Mounting kit	**PL 15669**
Lock, codable by customer	**KG 9017**

Single units and **air preparation units** see 5.22.001 - 5.22.007

Data Sheet No. 5.21.008E

A1P402D00EA00X

The right to introduce technical modifications is reserved

HOERBIGER ORIGA

Bowl Guard Kit

for filter-water-separator oil mist lubricator combination units of series AIRFIT SWING

Accessories

Characteristics

Mounting	With snap mounting
Material	Zinc diecasting, polymer (POM)

Dimensions (mm)

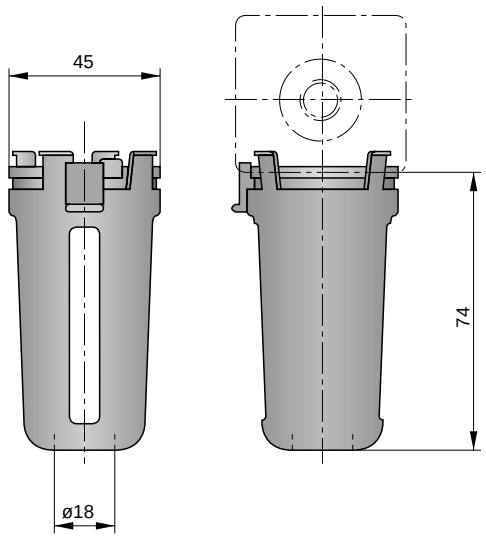

Dimension Table and Order Instructions

Port size	**Order No.**
G1/8, G1/4, G3/8	**PL 16970**

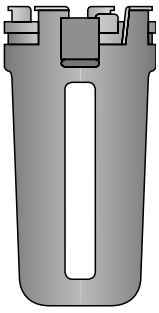

The bowl guard protects the plastic bowl against external damage.

It comprises:
Bowl guard
(with snap mounting)

For single units see 5.12.004E-5.12.007E
For air preparation units see 5.12.002E-5.12.003E
For product group list see 5.12.001E

Data Sheet No. 5.21.009E

A1P487E00KY00X

The right to introduce technical modifications is reserved

Porting Block Kit

G1/4

To provide unlubricated air e.g. for air gun

airfit Swing **Accessories**

SX

Characteristics

Installation	Between 2 units of the aifit swing Series
Mounting	Directly flangeable with coupling kit supplied
Material	Zinc diecasting, black finish

Dimensions (mm)

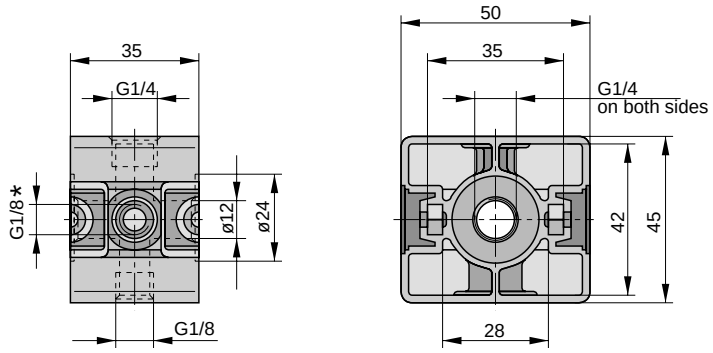

* G1/8 thread on both sides ready for through-drilling hole Ø4.
Thread depth 10 mm

Installation Instructions

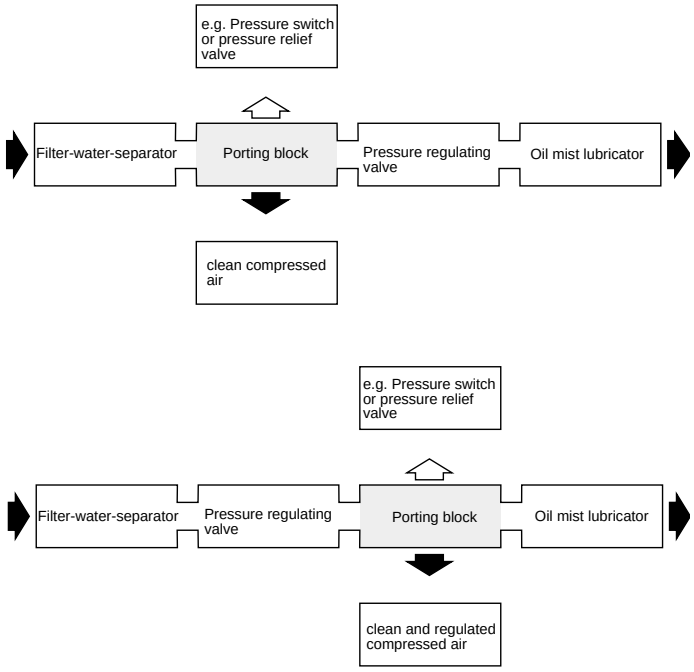

Porting block kit comprising:

1 Porting block
1 Coupling kit
Plug screw

Special versions:
Type SXV - Porting block kit with non-return function available on request
Type SXH - Porting block kit with holes for mounting pressure switch to Data Sheet 6.00.003E

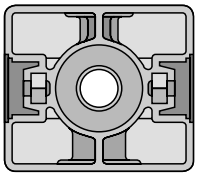

Order Instructions:

G1/4 – standard: SX	**PL 16969**
G3/8 – standard	**PL 18219**
G1/4 – with non-return function: SXV	**PL 17316**
G1/4 – with holes for mounting pressure switch: SXH	**PL 16977**
1/4" – NPTF-standard	**PL 17628**
3/8" – NPTF-standard	**PL 17745**

For single units see 5.12.004E-5.12.008E
For air preparation units see 5.12.002E, 5.12.003E
For product group list see 5.12.001E

A1P488E00KY00X

The right to introduce technical modifications is reserved

HOERBIGER ORIGA

Porting Block Kit

G1/2

To provide unlubricated air e.g. for air gun

airfit comfort

Characteristics

Installation	Between 2 units of the aifit comfort series
Mounting	Directly flangeable with coupling kit supplied
Material	Zinc - black lackiert

Dimensions (mm) Type PL 17607

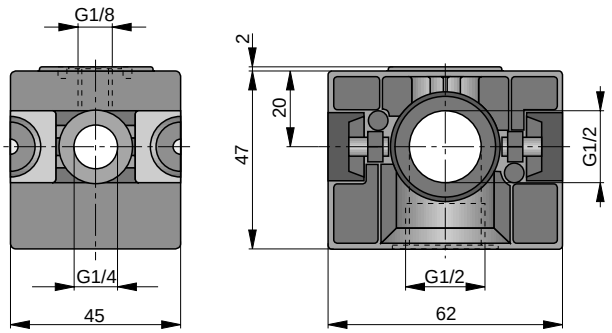

Dimensions (mm) Type PL 17609

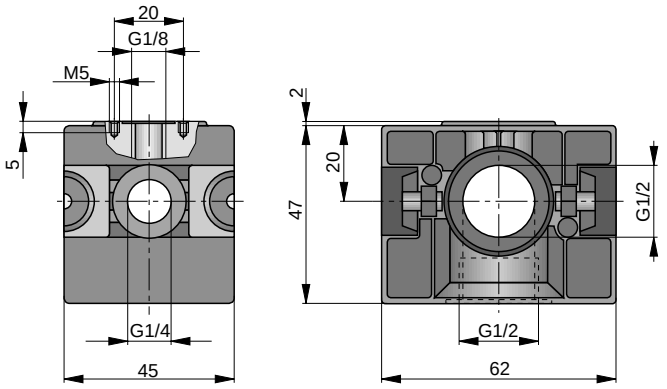

Installation Instructions

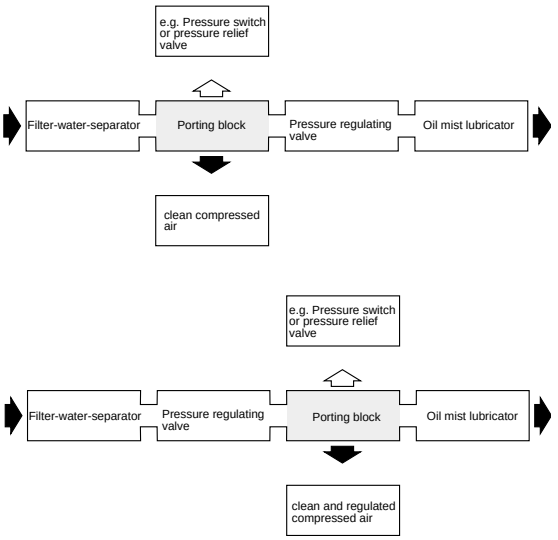

Porting block kit comprising:

1 Porting block
2 Cones
1 O-Ring
2 Nuts
2 Screws
1 Plug screw G1/8

• Version see order instructions

Order Instructions:

	PL 17607	**G1/2 – standard**
	PL 18370	**G3/8 – standard**
	PL 17609	**G1/2 – for mounting pressure switch**
	PL 17731	**1/2" – NPTF-standard**
	PL 17746	**3/8" – NPTF-standard**

For single units see 5.19.008E-5.19.016E
For air preparation units see 5.19.004E, 5.19.005E
For product group list see 5.19.001E

Data Sheet No. 5.21.012E

A1P550E00EAA00X

The right to introduce technical modifications is reserved

HOERBIGER ORIGA

Bowl Guard Kit

airfit comfort

Characteristics

Mounting	With snap mounting
Material	Zinc diecasting, polymer (POM)

Dimensions (mm)

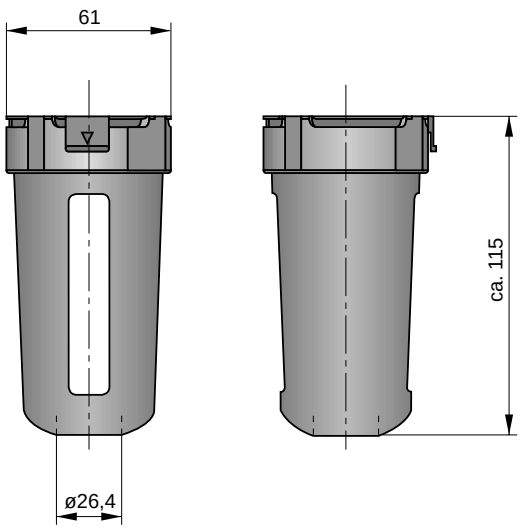

Dimension Table and Order Instructions

Port size	**Order No.**
G3/8, G1/2	**PL 17680**

Just click, easy assembly with bayonet fitting

The bowl guard protects the plastic bowl against external damage.

Assembly instructions:
The bowl guard kit consists of 3 parts. Please read the assembly instructions included with delivery.

For single units see 5.19.008E-5.19.016E
For air preparation units see 5.19.004E-5.19.005E
For product group list see 5.19.001E

A1P551E00KY00X

The right to introduce technical modifications is reserved

HOERBIGER ORIGA

3/2 Way Shut-off Valve

G3/8-G1/2

Spool type

Actuation: slide

airfit comfort

CDV-3/8-XS
CDV-1/2-XS

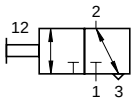

Characteristics			Pressures quoted as gauge pressure	
System			3/2 way valve (spool type)	
Mounting			direct assembly to any unit from the airfit comfort series, with coupling kit PL 17608	
Type			**CDV-3/8-XS**	**CDV-1/2-XS**
Port size			**G3/8**	**G1/2**
Installation			In any position	
Medium and ambient temperatures	ϑ_{min} ϑ_{max}	°C °C	0 +60 at 10 bar	(further temperatures on request)
Weight (mass)		kg	0.4	
Pneumatic Characteristic				
Operating pressure range	$p_{1\,min}$ $p_{1\,max}$	bar bar	0 16	
Recommended flow[1)]	Q_n	l/min m³/h	**850** **51**	**1900** **114**
Maximum flow[3)]	Q_{max}	l/min m³/h	7500 450	7500 450

[1)] at p_2 = 6.3 bar and 25 m/s
[2)] at p_2 = 6.3 bar and Δp = 1 bar

Dimensions (mm)

Type: CDV-3/8, 1/2

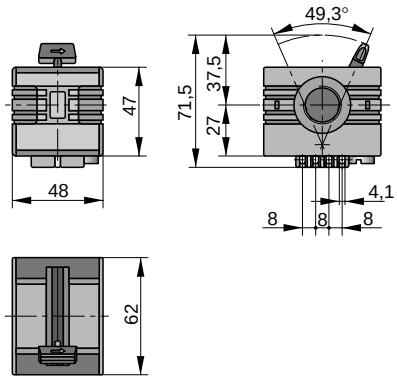

Bestellangaben

Description	Port size	**Type**	**Order No.**
3/2 way shut-off valve	G3/8	**CDV-3/8-XS**	**PB 56849-000**
3/2 way shut-off valve	G1/2	**CDV-1/2-XS**	**PB 56949-000**

Accessories

Description	**Order No.**
Coupling kit	**PL 17608**
Adaptor set G3/4	**PL 17681**

Accessories

Key, codeable by costomer

Order No.: KG 9017

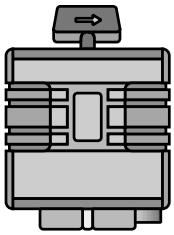

- Spool type valve
- 4-fold lockable
- Colour coded optical position indicator
- Controlled exhaust
- Arrow symbol indicates flow direction
- Version NPTF thread

For single units see 5.19.008E-5.19.016E
For air preparation units see 5.19.004-5.19.005E
For product group list see 5.19.001E

Data Sheet No. 5.21.014E

A1P552E00KY00X

The right to introduce technical modifications is reserved

HOERBIGER ORIGA

3/2 Way Shut-off Valve

G1/4, G3/8

Spool type

Actuation: slide

SDV-1/4-XS
SDV-3/8-XS

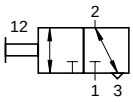

Characteristics			Pressures quoted as gauge pressure	
System			3/2 way valve (spool type)	
Mounting			direct assembly to any unit from the airfit swing series, with coupling kit PL 16959	
Type			**SDV-1/4-XS**	**SDV-3/8-XS**
Port size			**G1/4**	**G3/8**
Installation			In any position	
Medium and ambient temperatures	ϑ_{min} ϑ_{max}	°C °C	0 +60 at 10 bar	(further temperatures on request)
Weight (mass)		kg	0.25	
Pneumatic Characteristic				
Operating pressure range	$p_{1\,min}$ $p_{1\,max}$	bar bar	0 16	
Recommended flow[1)]	Q_n	l/min m³/h	**550** **33**	**850** **51**
Maximum flow[3)]	Q_{max}	l/min m³/h	4100 246	5300 318

[1)] at p_2 = 6.3 bar and 25 m/s
[2)] at p_2 = 6.3 bar and Δp = 1 bar

Dimensions (mm)

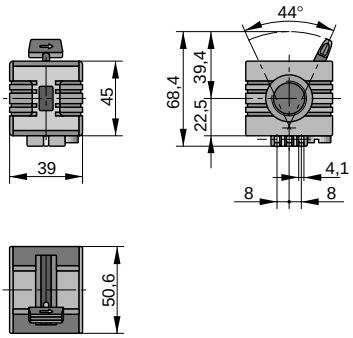

Bestellangaben

Description	Port size	**Type**	**Order No.**
3/2 way shut-off valve lockable	G1/4	**SDV-1/4XS**	**PB 46749-101**
3/2 way shut-off valve lockable	G3/8	**SDV-3/8XS**	**PB 46849-101**

Accessories

Description	**Order No.**
Coupling kit	**PL 16959**

Accessories

Key, codeable by costomer

Order No.: KG 9017

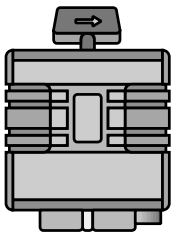

- Spool type valve
- 3-fold lockable
- Colour coded optical position indicator
- Controlled exhaust
- Arrow symbol indicates flow direction
- version with NPTF thread

For single units see 5.12.004E-5.12.007E
For air preparation units see 5.12.003E
For product group list see 5.12.001E

Data Sheet No. 5.21.015E

A1P596E00KY00X

The right to introduce technical modifications is reserved

PNEUMATIC
GROUP

AIR PREPARATION UNITS
G3/4-G1
SERIES

airfit
PRESTIGE

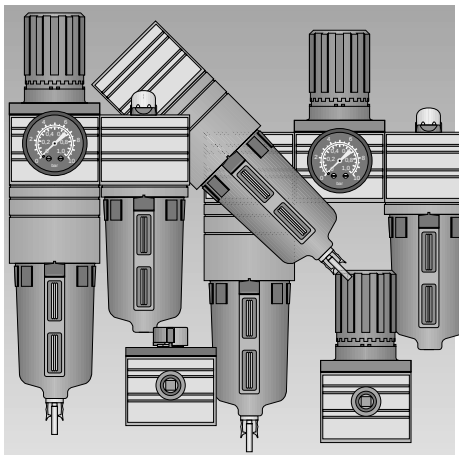

HOERBIGER
ORIGA

		Port size	Recommended flow (l/min)*	Maximum flow (l/min)	**Type**	Data Sheet No.
Air preparation units	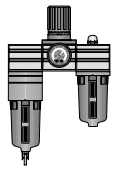	G3/4	3500	**7000**	**XFRL-3/4**	5.22.002E
		G1	5000	**9000**	**XFRL-1**	
		G3/4	3500	**9000**	**XKL-3/4**	5.22.003E
		G1	5000	**10000**	**XKL-1**	
Filter-regulator		G3/4	3500	**12500**	**XK-3/4**	5.22.004E
		G1	5000	**14000**	**XK-1**	
Filter-water-separator		G3/4	3500	**12500**	**XF-3/4**	5.22.005E
		G1	5000	**14500**	**XF-1**	
Pressure regulating valve		G3/4	3500	**12500**	**XR-3/4**	5.22.006E
		G1	5000	**13500**	**XR-1**	
Oil mist lubricator		G3/4	3500	**17000**	**XL-3/4**	5.22.007E
		G1	5000	**18000**	**XL-1**	
3/2 way shut-off valve		G3/4	3500	**>20000**	**XDV-3/4**	5.21.008E
		G1	5000	**>20000**	**XDV-1**	
Start-stop valve		G3/4	3500	**14000**	**XDS-3/4**	5.95.017E
		G1	5000	**16000**	**XDS-1**	

Table of Contents see 5.00.001E

* at 6.3 bar and 25 m/s

A3P033E71EAA00X

The right to introduce technical modifications is reserved

Air Preparation Unit

G3/4, G1

Standard with metal bowl

airfit PRESTIGE

XFRL

Characteristics			Pressures quoted as gauge pressure	
System			Air preparation unit comprising filter-water-separator, diaphragm-type pressure regulating valve and oil mist lubricator *)	
Type			**XFRL-3/4**	**XFRL-1**
Port size			**G3/4**	**G1**
Max. condensate capacity		cm^3	500	
Condensate drainage			Standard: manual On request: semiautomatic with pressure relief or fully automatic	
Max. oil capacity		cm^3	500	
Oil refilling			Standard: manual - also during operation On request: bowl with automatic refilling	
Installation			Vertical	
Medium and ambient temperatures	ϑ_{min} ϑ_{max}	°C °C	0 +50 at 10 bar (further temperatures on request)	
Weight (mass)		kg	5.70	
Pneumatic Characteristic[1]				
Operating pressure range - inlet pressure	$p_{1\,min}$ $p_{1\,max}$	bar bar	0 10	
Operating pressure range - outlet pressure	$p_{2\,min}$ $p_{2\,max}$	bar bar	0.5 10	
Recommended flow[2]	Q_n	l/min m^3/h	**3500** **210**	**5000** **300**
Maximum flow[3]	Q_n	l/min m^3/h	7000 420	9000 540

[1] For further characteristics see 5.22.003E-5.22.007E
[2] at 6 bar and 25 m/s
[3] at p_1=10 bar on p_2 =6.3 pΔ=1 bar

*) Use only recommended oils with viscosity VG32 to ISO 3448 (32 mm^2/s at 40°C) or HOERBIGER special oil, Order No.: KY 8766 (Cat.-No. 5.61.050E)

Air preparation unit comprising:

Filter-water-separator
Diaphragm-type pressure regulating valve
Oil mist lubricator
Gauge
Mounting bracket

- Modular system
- Modern design
- Version with NPTF thread

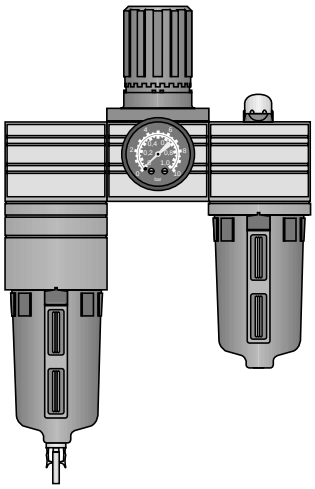

Flow Characteristics

Type: XFRL-1

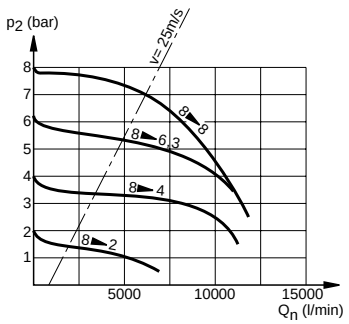

For single units see 5.22.004E-5.22.007E
For product group list see 5.22.001E

Data Sheet No. 5.22.002E-1

A1P188E00KY00X

The right to introduce technical modifications is reserved

HOERBIGER ORIGA

Accessories

Porting block kit
to provide unlubricated air

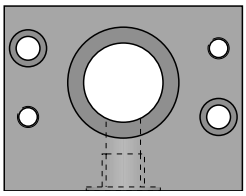

Order No.: PL 15672

Dimensions (mm)

Porting block

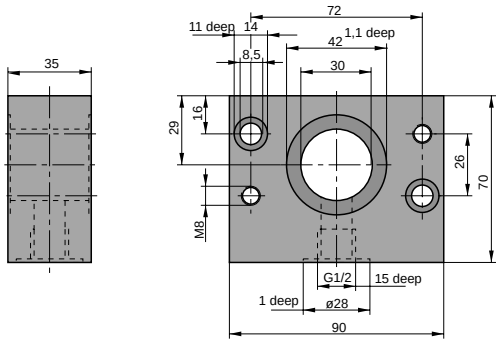

Dimensions (mm)

Type: XFRL-3/4
XFRL-1

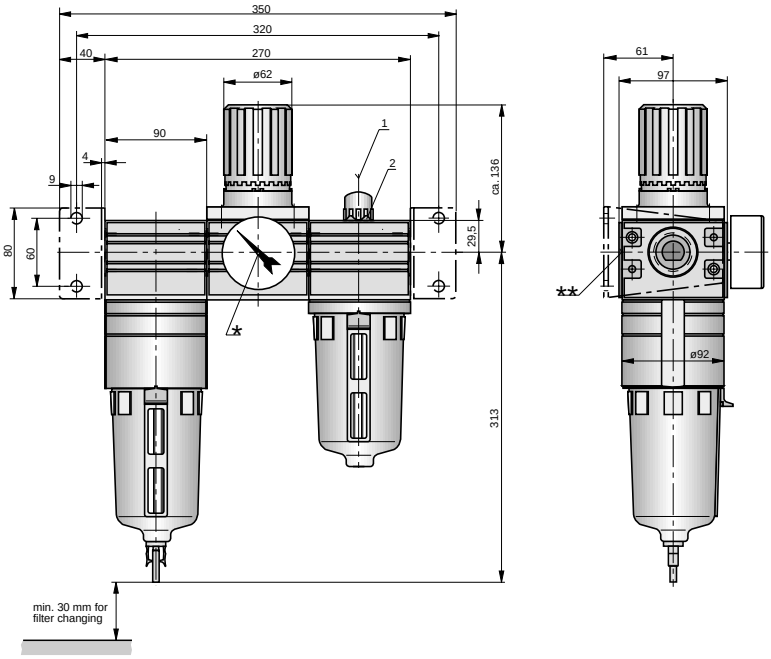

Version-A
(automatic drainage)

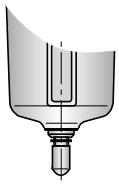

* Two opposite gauge ports G1/4
** On delivery the plug screw is not assembled.

1 = oil adjusting screw
2 = oil refilling plug

Order Instructions

Description	Port size	**Type**	**Order No.**
Basic model	G3/4	**XFRL-3/4**	**PB 36049-100**
Basic model	G1	**XFRL-1**	**PB 36149-100**
With semiautomatic drainage	G3/4	**XFRL-3/4-H**	**PB 36049-104**
With semiautomatic drainage	G1	**XFRL-1-H**	**PB 36149-104**
With automatic drainage	G3/4	**XFRL-3/4-A**	**PB 36049-105**
With automatic drainage	G1	**XFRL-1-A**	**PB 36149-105**

Accessories

Description	**Order No.**
Porting block kit	**PL 15672**
3/2 way shut-off valve G3/4, G1	**PB 33849-100, PB 33949-100**
Solvent resistant sight glass	**PL 15717**

Air Preparation Unit

G3/4, G1

Standard with metal bowl
Degree of moisture separation 96%

airfit PRESTIGE

XKL

Characteristics			Pressures quoted as gauge pressure	
System			Air preparation unit comprising filter-regulator and oil mist lubricator *)	
Type			**XKL-3/4**	**XKL-1**
Port size			**G3/4**	**G1**
Max. condensate capacity		cm^3	500	
Condensate drainage			Standard: manual On request: semiautomatic with pressure relief fully automatic	
Max. oil capacity		cm^3	500	
Oil refilling			Standard: manual - also during operation On request: bowl with automatic refilling	
Installation			Vertical	
Medium and ambient temperatures	ϑ_{min} ϑ_{max}	°C °C	0 +50 at 10 bar (further temperatures on request)	
Weight (mass)		kg	4.4	
Pneumatic Characteristic[1]				
Operating pressure range - inlet pressure	$p_{1\,min}$ $p_{1\,max}$	bar bar	0 10	
Operating pressure range - outlet pressure	$p_{2\,min}$ $p_{2\,max}$	bar bar	0.5 10	
Recommended flow[2]	Q_n	l/min m^3/hh	**3500** **210**	**5000** **300**
Maximum flow[3]	Q_n	l/min m^3/h	9000 540	10000 600

[1] For further characteristics see 5.22.003E-5.22.007E
[2] at 6 bar and 25 m/s
[3] at p_1=10 bar on p_2 =6.3 pΔ=1 bar

*) Use only recommended oils with viscosity VG32 to ISO 3448 (32 mm^2/s at 40°C) or HOERBIGER special oil, Order No.: KY 8766 (Cat.-No. 5.61.050E)

Air preparation unit comprising:

Filter-regulator
Oil mist lubricator
Gauge
Mounting bracket

- Modular system
- Modern design
- Version with NPTF thread

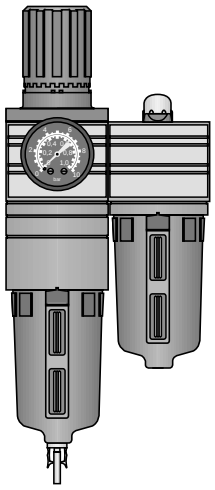

For single units see 5.22.004E-5.22.007E
For product group list see 5.22.001E

Data Sheet No. 5.22.003E-1

A1P404E00KY00X

The right to introduce technical modifications is reserved

HOERBIGER ORIGA

Dimensions (mm)

Type: XKL-3/4
XKL-1

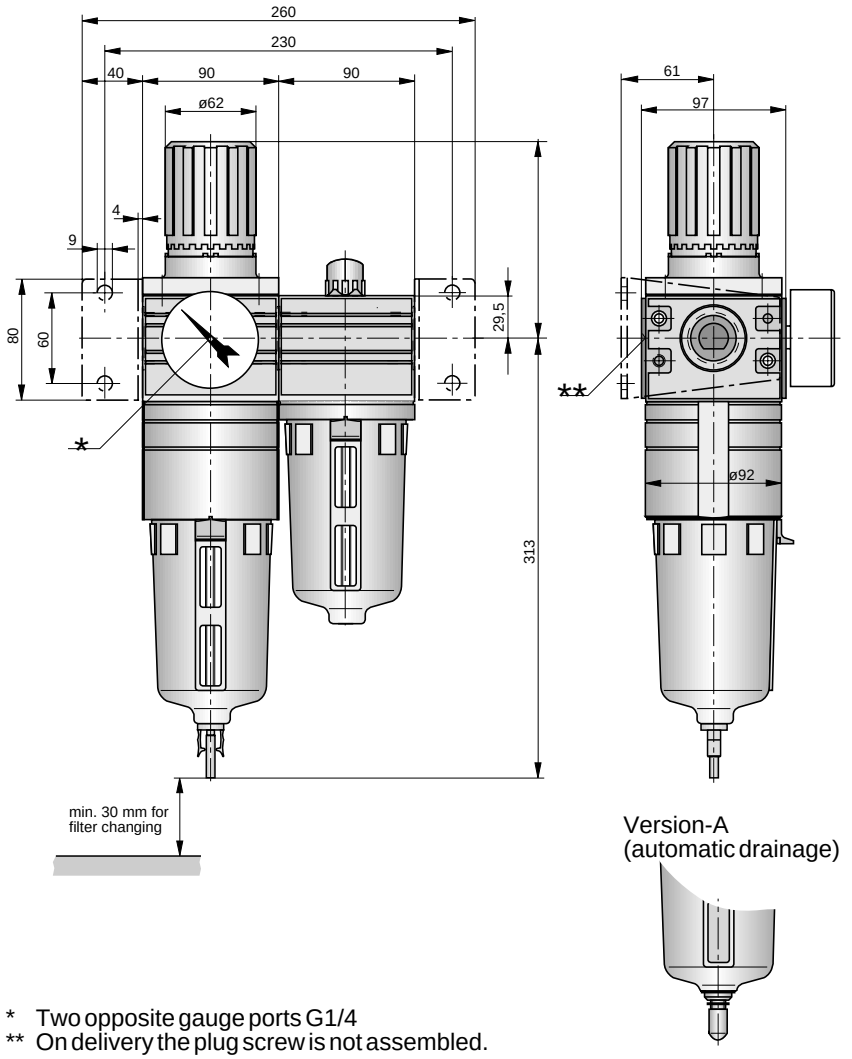

* Two opposite gauge ports G1/4
** On delivery the plug screw is not assembled.

Accessories

Coupling kit
for connecting 2 single units

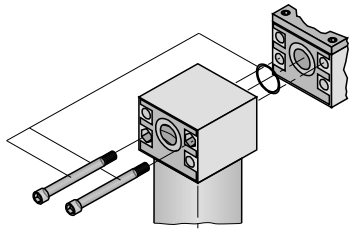

Order No.: PL 15670

Accessories

3/2 way shut-off valve

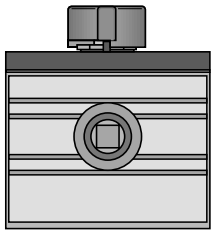

Order No.: XDV-3/4: PB 33849-100
XDV-1: PB 33949-100

Order Instructions

Description	Port size	Type	Order No.
Basic model	G3/4	**XKL-3/4**	**PB 32449-100**
Basic model	G1	**XKL-1**	**PB 32549-100**
With semiautomatic drainage	G3/4	**XKL-3/4-H**	**PB 32449-104**
With semiautomatic drainage	G1	**XKL-1-H**	**PB 32549-104**
With automatic drainage	G3/4	**XKL-3/4-A**	**PB 32449-105**
With automatic drainage	G1	**XKL-1-A**	**PB 32549-105**

Accessories

Description	Order No.
Porting block kit G1/2	**PL 15672**
3/2 way shut-off valve G3/4, G1	**PB 33849-100, PB 33949-100**
Solvent resistant sight glass	**PL 15717**
Coupling kit	**PL 15670**
Regulator spring for operating pressure 16 bar	**PL 16570**
Gauge, Ø 63 mm, 0-10 bar, G1/4	**KZ 8817**
Mounting kit	**PL 15669**

Filter-Regulator

G3/4, G1

Pressure regulating valve with filter-water-separator

Standard with metal bowl
Degree of moisture separation 96%

XK

Characteristics			Pressures quoted as gauge pressure	
System			Cyclone system with filter element, combined with a diaphragm-type pressure regulating valve (spring loaded) with flow compensation and secondary pressure relief	
Type			**XK-20**	**XK-25**
Port size			**G3/4**	**G1**
Pore size of filter element		µm	Standard: 30 5	
Max. condensate capacity		cm³	500	
Condensate drainage			Standard: manual semiautomatic with pressure relief or fully automatic	
Installation			Vertical	
Medium and ambient temperatures	ϑ_{min} ϑ_{max}	°C °C	0 +50 at 10 bar	(further temperatures on request)
Weight (mass)		kg	2.8	
Pneumatic Characteristic				
Operating pressure range - inlet pressure	$p_{1\,min}$ $p_{1\,max}$	bar bar	0 10	
Operating pressure range - outlet pressure	$p_{2\,min}$ $p_{2\,max}$	bar bar	0.5 10	
Min. pressure difference	p_1-p_2	bar	0.2	
Hysteresis p_1=10/p_2=0 Hysteresis p_1=10/p_2=10		bar bar	0.6 0.3	
Recommended flow[1)]	Q_n	l/min m³/hh	**3500** **210**	**5000** **300**
Maximum flow[2)]	Q_n	l/min m³/h	12500 750	14000 840
Degree of moisture separation at recommended flow	η	%	96	96

[1)] at 6 bar and 25 m/s
[2)] at p_1=10 bar on p_2 =6.3 pΔ=1 bar

- Modular system
- Modern design
- Version with NPTF thread

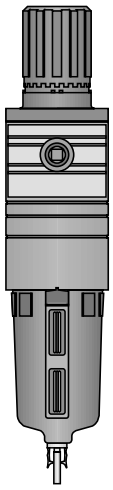

Filter-regulator with flow compensation and secondary pressure relief, handwheel lockable

For single units see 5.22.004E -5.22.007E
For air preparation units see5.22.002E, 5.22.003E
For product group list see 5.22.001E

Data Sheet No. 5.22.004E-1

A1P403E00KY00X

The right to introduce technical modifications is reserved

Dimensions (mm)

Type: XK-3/4, XK-1

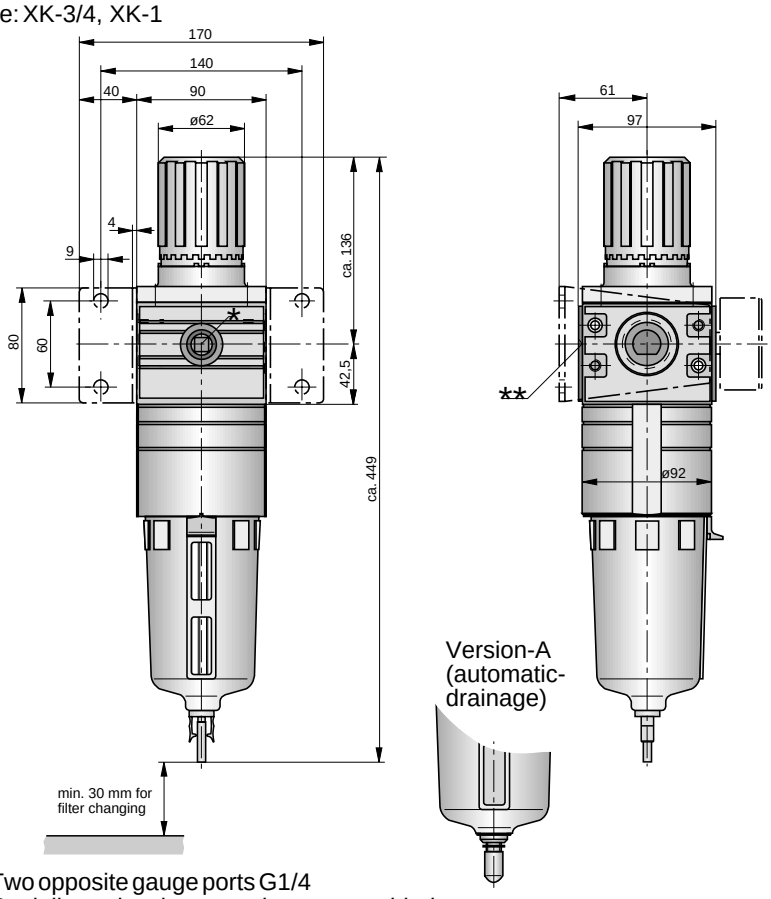

* Two opposite gauge ports G1/4
** On delivery the plug screw is not assembled.

Accessories

Coupling kit
for connecting 2 single units

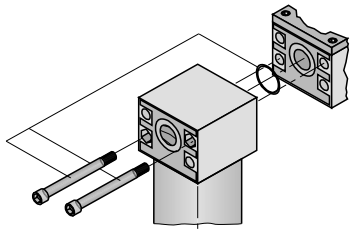

Order No.: PL 15670

Accessories

3/2 way shut-off valve

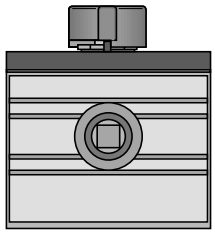

Order No.: XDV-3/4: PB 33849-100
XDV-1: PB 33949-100

Order Instructions

Description	Port size	**Type**	**Order No.**
Basic model	G3/4	**XK-3/4**	**PB 33649-100**
Basic model	G1	**XK-1**	**PB 33749-100**
With filter element 5 µm	G3/4	**XK-3/4-5**	**PB 33649-116**
With filter element 5 µm	G1	**XK-1-5**	**PB 33749-116**
With semiautomatic drainage	G3/4	**XK-3/4-H**	**PB 33649-101**
With semiautomatic drainage	G1	**XK-1-H**	**PB 33749-101**
With automatic drainage	G3/4	**XK-3/4-A**	**PB 33649-102**
With automatic drainage	G1	**XK-1-A**	**PB 33749-102**
With adapter for keylock	G3/4	**XK- 3/4-X**	**on request**
With adapter for keylock	G1	**XK-1-X**	**on request**

Accessories

Description	**Order No.**
Porting block kit G1/2	**PL 15672**
3/2 way shut-off valve G3/4, G1	**PB 33849-100, PB 33949-100**
Solvent resistant sight glass	**PL 15717**
Coupling kit	**PL 15670**
Manometer, Ø 63 mm, 0-10 bar, G1/4 (HOERBIGER-design)	**KG 8002**
Mounting kit	**PL 15669**

Filter-Water-Separator, Dust Filter

G3/4, G1

Standard with metal bowl
Degree of moisture separation 96%
>99 % (XFD)

Characteristics			Pressures quoted as gauge pressure			
System			Cyclone system and downstream filter element (XF), Dust filter (XFD)			
Type			**XF-3/4**	**XFD-3/4**	**XF-1**	**XFD-1**
Port size			**G3/4**		**G1**	
Max. condensate capacity		cm^3	500			
Pore size of filter element		µm	Standard: 30 5 and 1 (XFD)			
Condensate drainage			Standard: manual semiautomatic (XF) (pressure relief) and fully automatic (XF)			
Installation			Vertical			
Medium and ambient temperatures	ϑ_{min} ϑ_{max}	°C °C	0 +50 at 10 bar	(further temperatures on request)		
Weight (mass)		kg	2.20			
Pneumatic Characteristic						
Operating pressure range	p_{min} p_{max}	bar bar	0 10			
Recommended flow[1)]	Q_n	l/min m^3/h	**3500** **210**		**5000** **300**	
Maximum flow[2)]	Q_n	l/min m^3/h	12500 750	11400 684	14500 840	13900 834
Degree of moisture separation at recommended flow	η	%	96	*	96	*

[1)] at 6 bar and 25 m/s
[2)] at p_1=6.3 bar and Δp=1 bar

* only solid particles > 99 % related to 1 µm

XF

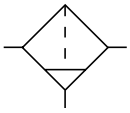

XFD

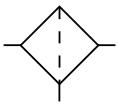

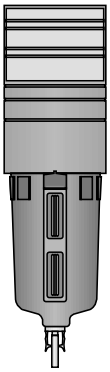

XF:
Filter-water-separator with cyclone system and downstream filter element.

XFD:
Dust filter with large filter surface for long service life. For compressed air system with air dryers.

- Modular system
- Modern design
- Version with NPTF thread

For single units see 5.22.003E-5.22.007E
For air preparation units see 5.22.002E, 5.22.003E
For product group list see 5.22.001E

A1P189E00KY00X

The right to introduce technical modifications is reserved

Dimensions (mm)

Type: XF-3/4
XF-1

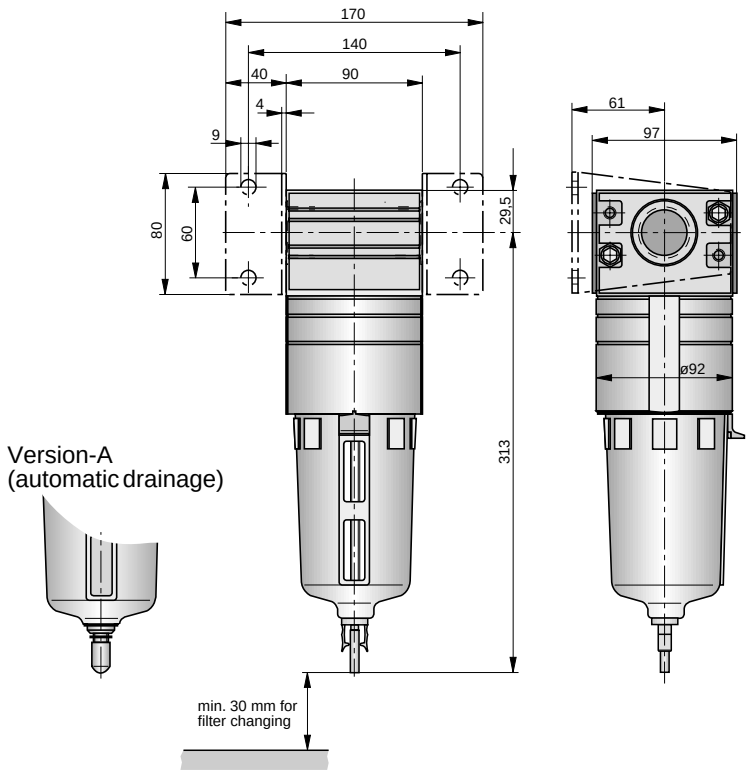

Flow Characteristics

Type: XF-1

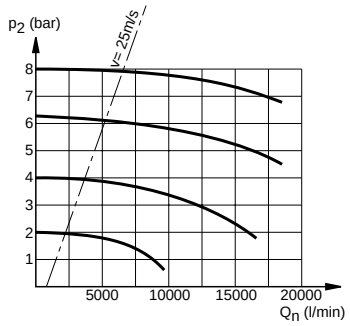

Accessories

Coupling kit
for connecting 2 single units

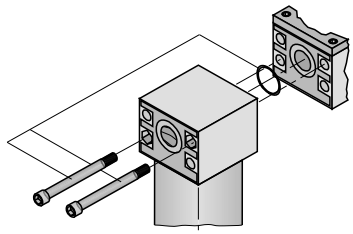

Order No.: PL 15670

Order Instructions

Description	Port size	**Type**	**Order No.**
Basic model	G3/4	**XF-3/4**	**PB 34049-100**
Basic model	G1	**XF-1**	**PB 34149-100**
With filter element 5 µm	G3/4	**XF-3/4-5**	**PB 34049-116**
With filter element 5 µm	G1	**XF-1-5**	**PB 34149-116**
With filter element 1 µm	G3/4	**XFD-3/4-1**	**PB 34049-170**
With filter element 1 µm	G1	**XFD-1-1**	**PB 34149-170**
With semiautomatic drainage	G3/4	**XF-3/4-H**	**PB 34049-101**
With semiautomatic drainage	G1	**XF-1-H**	**PB 34149-101**
With automatic drainage	G3/4	**XF-3/4-A**	**PB 34049-102**
With automatic drainage	G1	**XF-1-A**	**PB 34149-102**

Accessories

Description	**Order No.**
Mounting kit	**PL 15669**
Coupling kit	**PL 15670**
Porting block kit G1/2	**PL 15672**
3/2 way shut-off valve G3/4, G1	**PB 33849-100, PB 33949-100**

Pressure Regulating Valve

G3/4, G1

airfit PRESTIGE

XR

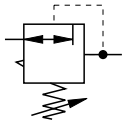

Characteristics			Pressures quoted as gauge pressure	
System			Diaphragm-type pressure regulating valve (spring loaded) with flow compensation and secondary pressure relief	
Type			**XR-3/4**	**XR-1**
Port size			**G3/4**	**G1**
Installation			In any position	
Medium and ambient temperatures	ϑ_{min} ϑ_{max}	°C °C	0 +60	(further temperatures on request)
Weight (mass)		kg	1.80	
Pneumatic Characteristic				
Operating pressure range - inlet pressure	$p_{1\,min}$ $p_{1\,max}$	bar bar	0 16	
Operating pressure range - outlet pressure	$p_{2\,min}$ $p_{2\,max}$	bar bar	0.5 on request 10	0.5[2)] 16
Min. pressure difference	p_1-p_2	bar	0.2	
Hysteresis p_1=10/p_2=0 Hysteresis p_1=10/p_2=10		bar	0.6 0.2	
Recommended flow[1)]	Q_n	l/min m^3/h	**3500** **210**	**5000** **300**
Maximum flow[3)]	Q_n	l/min m^3/h	12500 750	13500 840

1) at 6 bar and 25 m/s
2) By the use of special springs, the outlet pressure can be precisely regulated in the specified p_2 range
3) at p_1=10 bar on p_2 =6.3 pΔ=1 bar

A1P190E00KY00X

Flow Characteristics

Type: XR-1

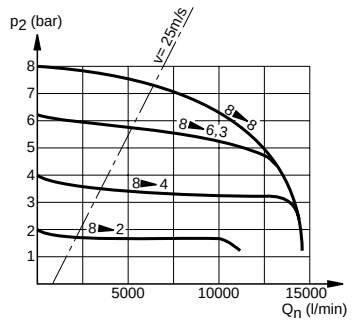

Outlet Pressure Variation with Fluctuating Inlet Pressure

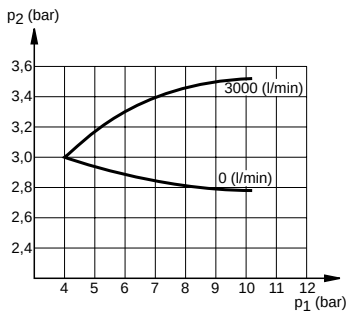

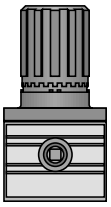

Diaphragm-type pressure regulating valve (spring loaded) with secondary pressure relief and flow compensation, handwheel lockable

- Modular system
- Modern design
- Version with NPTF thread

The right to introduce technical modifications is reserved

For single units see 5.22.004E - 5.22.007E
For air preparation units see 5.22.002E, 5.22.003E
For product group list see 5.22.001E

HOERBIGER ORIGA

Accessories

Gauge
Ø 63 mm, 0-10 bar, G1/4

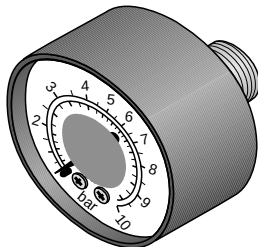

Order No.: KG 8002

Accessories

Coupling kit
for connecting 2 single units

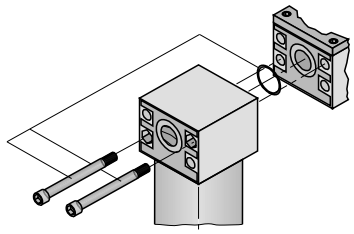

Order No.: PL 15670

Dimensions (mm)

Type: XR-3/4
XR-1

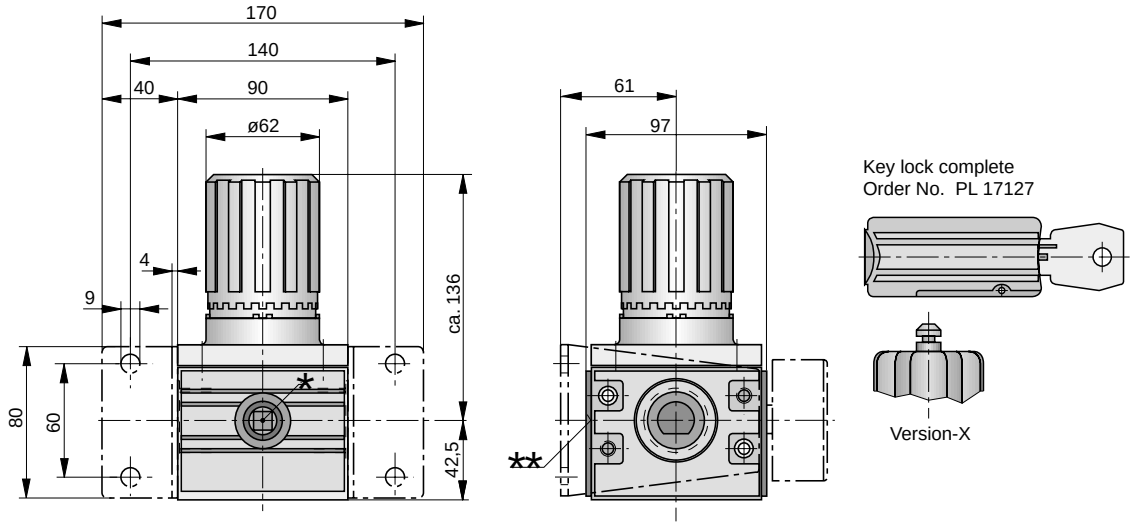

* Two opposite gauge ports G1/4
** On delivery the plug screw is not assembled.

Order Instructions

Description	Port size	Type	Order No.
Basic model	G3/4	**XR-3/4**	**PB 34249-100**
Basic model	G1	**XR-1**	**PB 34349-100**
With adapter for keylock	G3/4	**XR-3/4-X**	**PB 34249-106**
With adapter for keylock	G1	**XR-1-X**	**PB 34349-106**

Accessories

Description	Order No.
Mounting kit	**PL 15669**
Coupling kit	**PL 15670**
Gauge, Ø 63 mm, 0-10 bar, G1/4 (HOERBIGER-design)	**KG 8002**
Porting block kit G1/2	**PL 15672**
Keylock complete	**PL 17127**
3/2 way shut-off valve G3/4, G1	**PB 33849-100, PB 33949-100**
Regulator spring for operating pressure 16 bar **Note: use only for special applications**	**PL 16570**

Oil mist lubricato

G3/4, G1

Standard with metal bowl

airfit PRESTIGE

XL

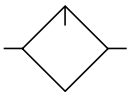

Characteristics			Pressures quoted as gauge pressure	
System			Oil mist lubricator with flow compensation *)	
Type			**XL-3/4**	**XL-1**
Port size			**G3/4**	**G1**
Oil/air ratio			Degressive (number of drops per minute remains constant)	
Max. oil capacity		cm^3	500	
Oil refilling			Standard: manual - also during operation On request: bowl with automatic refilling	
Installation			Vertical	
Medium and ambient temperatures	ϑ_{min} ϑ_{max}	°C °C	0 +50 at 10 bar	(further temperatures on request)
Weight (mass)		kg	1.60	
Pneumatic Characteristic				
Operating pressure range	p_{min} p_{max}	bar bar	0 10	
Recommended flow[1)]	Q_n	l/min m^3/h	**3500** **210**	**5000** **300**
Maximum flow[2)]	Q_n	l/min m^3/h	17000 1020	18000 1080

[1)] at 6 bar and 25 m/s
[2)] at p_1=6.3 bar and pΔ=1 bar

*) Use only recommended oils with viscosity VG32 to ISO 3448 (32 mm^2/s at 40°C) or HOERBIGER special oil, Order No.: KY 8766 (Cat.-No. 5.61.050E)

Flow Characteristics

Type: XL-1

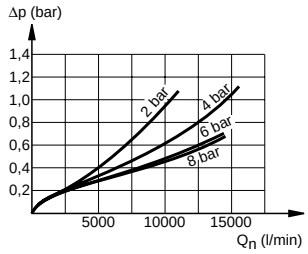

Oil/Air Ratio

Type: XL-1

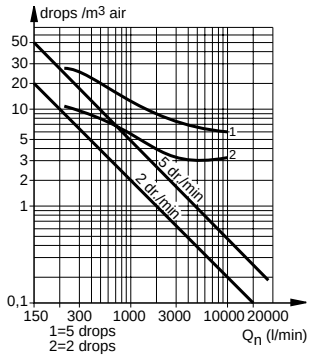

Min. Operating Conditions

Type: XL-1

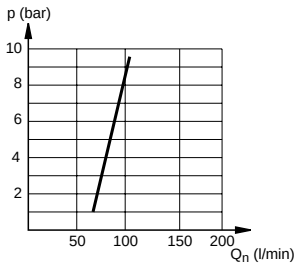

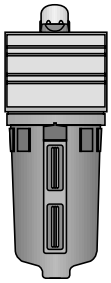

Oil mist lubricator with flow compensation (number of drops per minute is constant)

- Modular system
- Modern design
- Version with NPTF thread

For single units see 5.22.003E-5.22.007E
For air preparation units see 5.22.002E, 5.22.003E
For product group list see 5.22.001E

Data Sheet No. 5.22.007E-1

HOERBIGER ORIGA

A1P191E00KY00X

The right to introduce technical modifications is reserved

Dimensions (mm)

Type: XL-3/4
XL-1

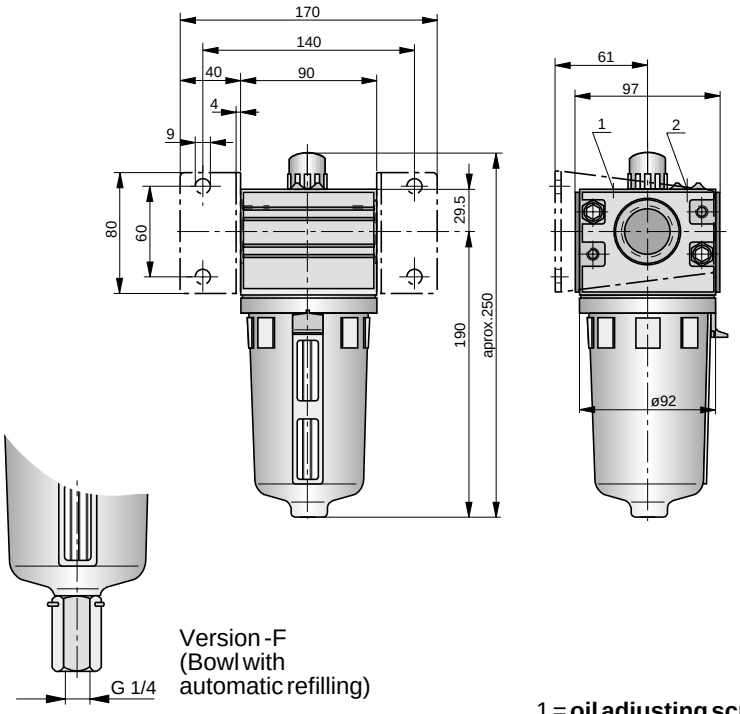

Version -F
(Bowl with
automatic refilling)

1 = **oil adjusting screw**
2 = **oil refilling plug**

Accessories

Air hydraulic pumpTyp LHP1
For further details see 5.61.001E

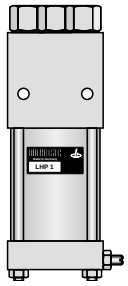

Order No.: PB 05949-000

Accessories

Bowl with oil level control (float-type switch)

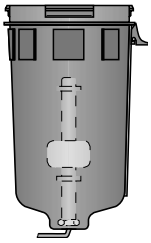

Order No.: PL 16107

Order Instructions

Description	Port size	**Type**	**Order No.**
Basic model	G3/4	**XL-3/4**	**PB 34449-100**
Basic model	G1	**XL-1**	**PB 34549-100**
With automatic oil refilling	G3/4	**XL-3/4-F**	**PB 34449-102**
With automatic oil refilling	G1	**XL-1-F**	**PB 34549-102**

Accessories

Description	**Order No.**
Mounting kit	**PL 15669**
Coupling kit	**PL 15670**
Porting block kit G1/2 to provide unlubricated air	**PL 15672**
Air hydraulic pump LHP1	**PB 05949-000**
Solvent resistant sight glass	**PL 15717**
Bowl with oil level control (floa-type switch) for XL	**PL 17791**
Bowl with automatic refilling for XL	**PL 17387**
3/2 way shut-off valve G3/4, G1	**PB 33849-100, PB 33949-100**

PNEUMATIC
GROUP

LARGE AIR PREPARATION UNITS G1 1/2-G2

airfit magnum

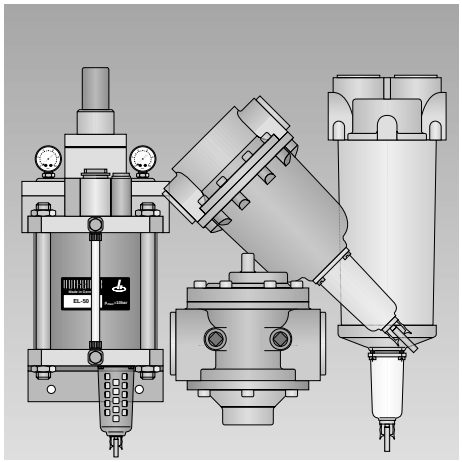

HOERBIGER
ORIGA

		Port size	Recommended flow (l/min)*	**Type**	Data Sheet No.
Filter-water-separator	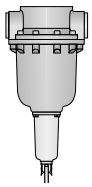	G1 1/2	8000	**LF 7-40**	5.50.002E
		G2	10000	**LF 7-50**	
Pressure regulating valve	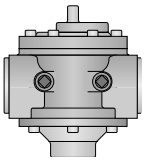	G1 1/2	8000	**LRV 5-40**	5.55.002E
		G2	10000	**LRV 5-50**	
Micro-mist lubricator		G1	Q_{min} = ca. 150 Q_{max} = 5500	**EL-25**	5.92.002E
		G2	Q_{min} = 200 Q_{max} = 16600	**EL-50**	
Submicrofilters activated carbon filters	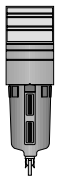	to G2			see Survey 5.80.001E

Table of Contents see 5.00.001E

* For max. flows see diagrams on single data sheet.
Max. flow is much higher than the given recommended flow.

A3P076E71KY00X

The right to introduce technical modifications is reserved

Filter-Water-Separator

G11/2, G2

airfit magnum

Degree of moisture separation 94 (92) %

Series LF 7

LF 7-..

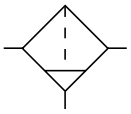

Characteristics			Pressures quoted as gauge pressure	
System			Cyclone system and filter element	
Type			**LF 7-40**	**LF 7-50**
Port size			**G11/2**	**G2**
Pore size of filter element		µm	Standard: 30 On request: 5	
Max. condensate capacity		cm^3	220	
Condensate drainage			Standard: manual On request: fully automatic (float-type)	
Installation			Vertical	
Medium and ambient temperatures	ϑ_{min} ϑ_{max}	°C °C	0 +50 at 10 bar	(further temperatures on request)
Weight (mass)		kg	5.50	5.25
Pneumatic Characteristic				
Operating pressure range	p_{min} p_{max}	bar bar	0 10	
Recommended flow	Q_n	l/min m^3/h	**8000** [1] **480** [1]	**10000** [2] **600** [2]
Degree of moisture separation at recommended flow	η	%	94	92

[1] at 6 bar and 15 m/s
[2] at 6 bar and 12 m/s

Filter-water-separator with cyclone system and filter element.

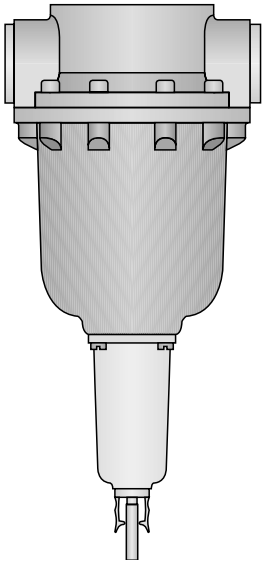

Flow Characteristics

Type: LF 7-40

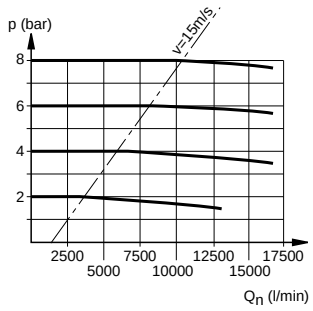

Flow Characteristics

Type: LF 7-50

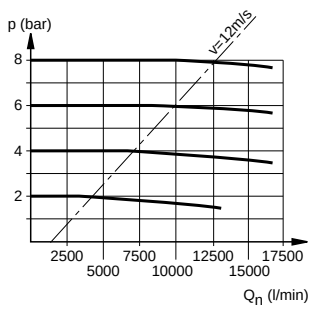

For pressure regulating valve see 5.55.002E

Data Sheet No. 5.50.002E-1

A1P123E00KY00X

The right to introduce technical modifications is reserved

HOERBIGER ORIGA

Dimensions (mm)

Type: LF 7-40/50

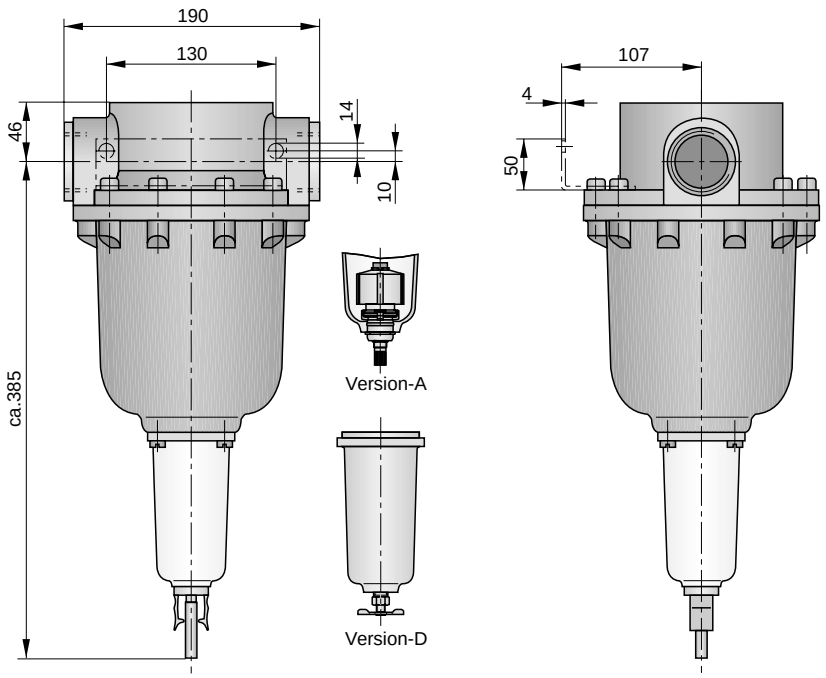

Order Instructions

Description	Port size	**Type**	**Order No.**
Basic model	G11/2	**LF 7-40**	**PB 15049-000**
Basic model	G2	**LF 7-50**	**PB 15149-000**
With filter element 5 µm	G11/2	**LF 7-40-5**	**PB 15049-016**
With filter element 5 µm	G2	**LF 7-50-5**	**PB 15149-016**
With automatic drainage	G11/2	**LF 7-40-A**	**PB 15049-002**
With automatic drainage	G2	**LF 7-50-A**	**PB 15149-002**
With metal bowl	G11/2	**LF 7-40-D**	**PB 15049-003**
With metal bowl	G2	**LF 7-50-D**	**PB 15149-003**
With automatic drainage and metal bowl	G11/2	**LF 7-40-AD**	**PB 15049-005**
With automatic drainage and metal bowl	G2	**LF 7-50-AD**	**PB 15149-005**

Accessories

Description	**Order No.**
Mounting kit	**PL 08022**
Metal bowl	**PL 08089**

Pressure Regulating Valve

G2 (G11/2)

Pilot operated

airfit magnum

Series LRV 5

LRV 5-..

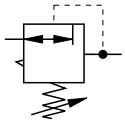

Characteristics			Pressures quoted as gauge pressure	
System			Pilot operated diaphragm-type pressure regulating valve with secondary pressure relief and flow compensation - suitable for remote control	
Type			**LRV 5-40**	**LRV 5-50**
Port size			**G11/2**	**G2**
Installation			In any position	
Medium and ambient temperatures	ϑ_{min} ϑ_{max}	°C °C	-20 +80	(further temperatures on request)
Weight (mass)		kg	3.25	
Pneumatic Characteristic				
Operating pressure range - inlet pressure	$p_{1\,min}$ $p_{1\,max}$	bar bar	0 16	
Operating pressure range - outlet pressure	$p_{2\,min}$ $p_{2\,max}$	bar bar	0 10 (p_{st} > 10bar)	
Min. pressure difference	p_1-p_2	bar	0.2	
Hysteresis p_1=10/p_2=0 Hysteresis p_1=10/p_2=10		bar bar	0.6 0.1	
Recommended flow	Q_n	l/min m³/h	**8000** [1] **480** [1]	**10000** [2] **600** [2]
Own air usage			Low	
Recommended pilot pressure regulating valve			SR-1/4	

[1] at p_2 = 6 bar and 15 m/s
[2] at p_2 = 6 bar and 12 m/s

Pilot operated diaphragm-type pressure regulating valve with secondary pressure relief and flow compensation - suitable for remote control

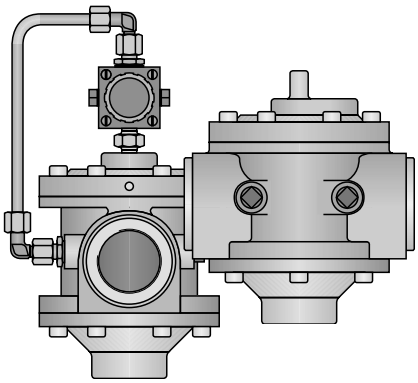

Flow Characteristics

Type: LRV 5-50

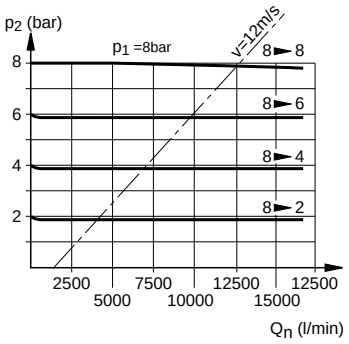

Outlet Pressure Variation with Fluctuating Inlet Pressure

Type: LRV 5-40/50

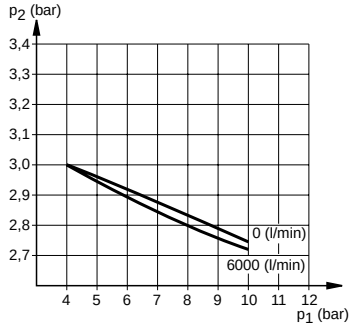

For filter-water-separator see 5.50.002E
For pilot pressure regulating valve see 5.12.006E

Data Sheet No. 5.55.002E-1

A1P124E00KY00X

The right to introduce technical modifications is reserved

HOERBIGER ORIGA

Dimensions (mm)

Type: LRV 5-50 (40)

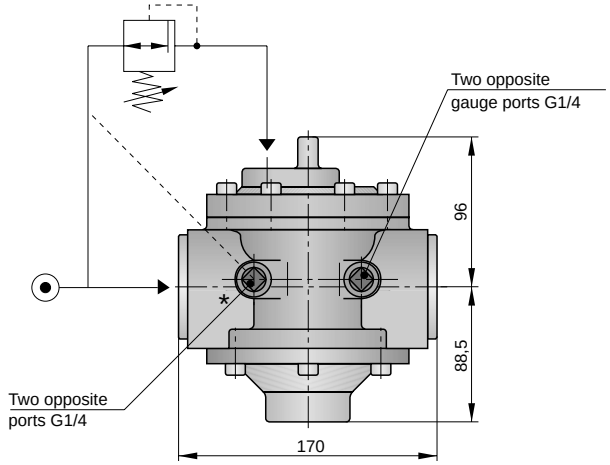

*) On delivery the plug screw is not assembled.

Dimensions (mm)

Type: LRV 5-50 (40)
Assembled complete with pilot pressure regulating valve, Type SR-1/4

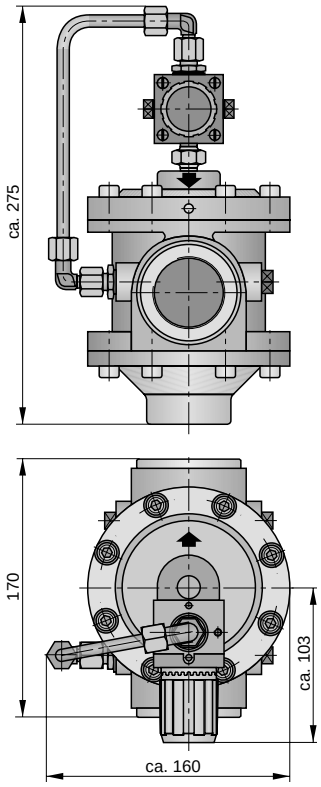

Accessories

Gauge
Ø 63 mm, 0-10 bar, G1/4

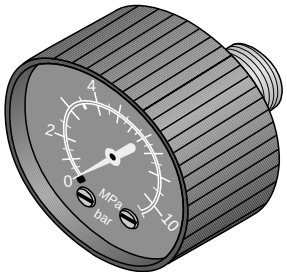

Order No.: KZ 8817

Accessories

Recommended pilot pressure regulating valve Type SR-1/4

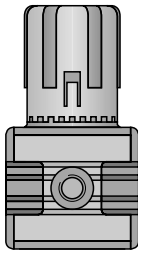

Order No.: PB 45449-040

Order Instructions

Description	Port size	**Type**	**Order No.**
Basic model	G11/2	**LRV 5-40**	**PB 15249-000**
Basic model	G2	**LRV 5-50**	**PB 15349-000**
Complete version (incl. SR-1/4)	G11/2	**LRV 5-40**	**PB 15249-020**
Complete version (incl. SR-1/4)	G2	**LRV 5-50**	**PB 15349-020**

Accessories

Description	**Order No.**
Gauge, Ø 63 mm, 0-10 bar, G1/4	**KZ 8817**
Mounting bracket	**PL 08028**
Recommended pilot pressure regulating valve SR-1/4	**PB 45449-000**

Pressure Regulating Valve

G3/4, G1

airfit PRESTIGE

XRV

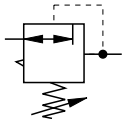

Characteristics			Pressures quoted as gauge pressure	
System			Pilot operated diaphragm-type pressure regulating valve with secondary pressure relief and flow compensation - suitable for remote control	
Type			**XRV-3/4**	**XRV-1**
Port size			**G3/4**	**G1**
Installation			In any position	
Medium and ambient temperatures	ϑ_{min} ϑ_{max}	°C °C	0 +60	(further temperatures on request)
Weight (mass)		kg	1.25	
Pneumatic Characteristic				
Operating pressure range - inlet pressure	$p_{1\,min}$ $p_{1\,max}$	bar bar	0 16	
Operating pressure range - outlet pressure	$p_{2\,min}$ $p_{2\,max}$	bar bar	0.5 8	
Min. pressure difference	p_1-p_2	bar	0.2	
Hysteresis p_1=10/p_2=0 Hysteresis p_1=10/p_2=10		bar bar	0.6 0.2	
Recommended flow[1)]	Q_n	l/min m³/h	**3500** **210**	**5000** **300**
Maximum flow[2)]	Q_n	l/min m³/h	12500 750	13500 810
Own air usage			Low (0.8 x p_2 [l/min])	
Recommended pilot pressure regulating valve			SR-1/4	

[1)] at p_2 = 6 bar and 25 m/s
[2)] at p_1=10 bar on p_2 =6.3 pΔ=1 bar

A1P234E00KY00X

Flow Characteristics

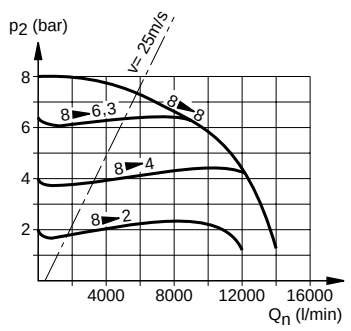

Outlet Pressure Variation with Fluctuating Inlet Pressure

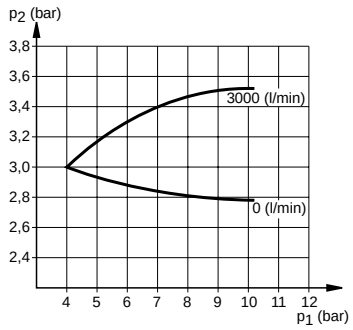

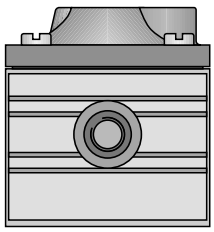

Pilot operated diaphragm-type pressure regulating valve with secondary pressure relief and flow compensation - suitable for remote control

- Modular system
- Modern design
- Version with NPTF thread

The right to introduce technical modifications is reserved

For filter-water-separator see 5.22.005E
For pilot pressure regulating valve see 5.12.006E

HOERBIGER ORIGA

Dimensions (mm)

Type: XRV-3/4
XRV-1

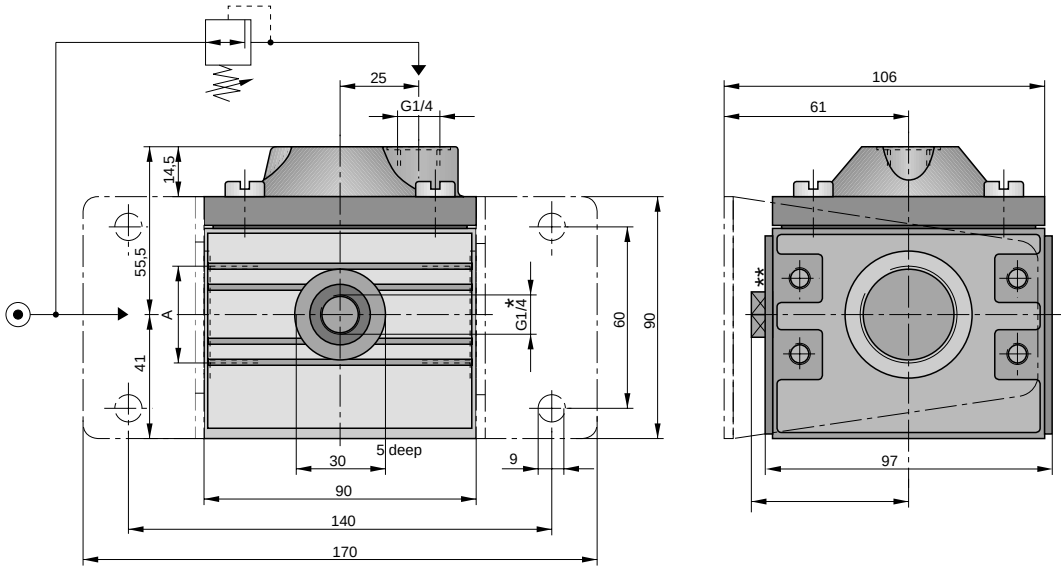

*) Two opposilte gauge ports G1/4
**) On delivery the plug screw is not assembled.

Accessories

Gauge
Ø 63 mm, 0-10 bar, G1/4

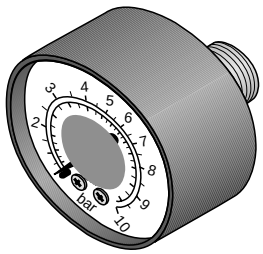

Order No.: KG 8002

Accessories

Coupling kit
for connecting 2 single units

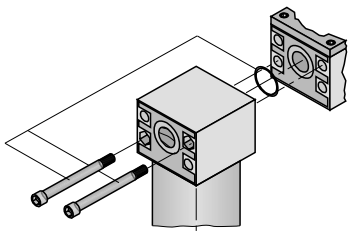

Order No.: PL 15670

Accessories

Recommended pilot pressure regulating valve Type SR-1/4

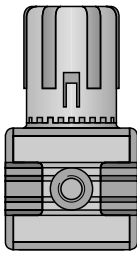

Order No.: PB 45449-000

Order Instructions

Description	Port size	**Type**	**Order No.**
Basic model	G3/4	**XRV-3/4**	**PB 34649-110**
Basic model	G1	**XRV-1**	**PB 34749-110**

Accessories

Description	**Order No.**
Gauge, Ø 63 mm, 0-10 bar, G1/4 (HOERBIGER-design)	**KG 8002**
Mounting kit	**PL 15669**
Coupling kit for connection AIRFIT X	**PL 15670**
Recommended pilot pressure regulating valve SR-1/4	**PB 45449-000**
3/2 way shut-off valve G3/4, G1	**PB 33849-100, PB 33949-100**

Pressure Regulating Valve

G1/4

Characteristics			Pressures quoted as gauge pressure
System			Pilot operated diaphragm-type pressure regulating valve with secondary pressure relief and flow compensation - suitable for remote control
Type			**SRV-1/4**
Anschlußgröße			**G1/4**
Installation			In any position
Medium and ambient temperatures	ϑ_{min} ϑ_{max}	°C °C	0 +60 (further temperatures on request)
Weight (mass)		kg	0.4
Pneumatic Characteristic			
Operating pressure range - inlet pressure	$p_{1\,min}$ $p_{1\,max}$	bar bar	0 16
Operating pressure range - outlet pressure	$p_{2\,min}$ $p_{2\,max}$	bar bar	0.5 8
Min. pressure difference	p_1-p_2	bar	0.2
Hysteresis p_1=10/p_2=0 Hysteresis p_1=10/p_2=10		bar bar	0.5 0.4
Recommended flow[1)]	Q_n	l/min m³/h	**550** **33**
Maximum flow[2)]	Q_n	l/min m³/h	2200 132
Recommended pilot pressure regulating valve			SR-1/8

[1)] at p_2 = 6 bar and 25 m/s
[2)] at p_1 = 10 bar and p_2 = 6.3 bar, Δp = 1 bar

SRV

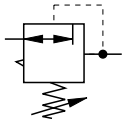

Flow Characteristics

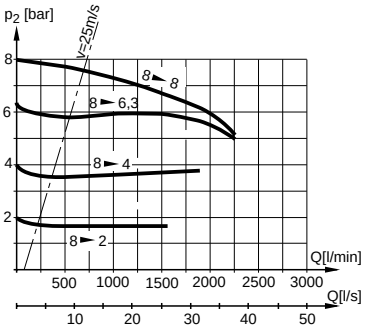

Outlet Pressure Variation with Fluctuating Inlet Pressure

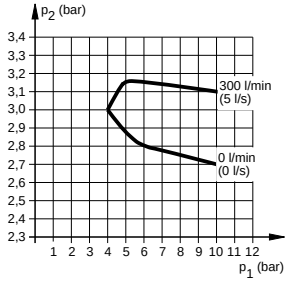

Pilot operated diaphragm-type pressure regulating valve with secondary pressure relief and flow compensation - suitable for remote control.

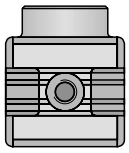

Easily adaptable to customer's choice of colour and private labelling.

- Version with NPTF thread

For filter-water-separator see 5.12.005E
For pilot pressure regulating valve see 5.12.006E

Data Sheet No. 5.55.005E-1

A1510E00KY00X

The right to introduce technical modifications is reserved

Dimensions (mm)
Type: SRV-1/4

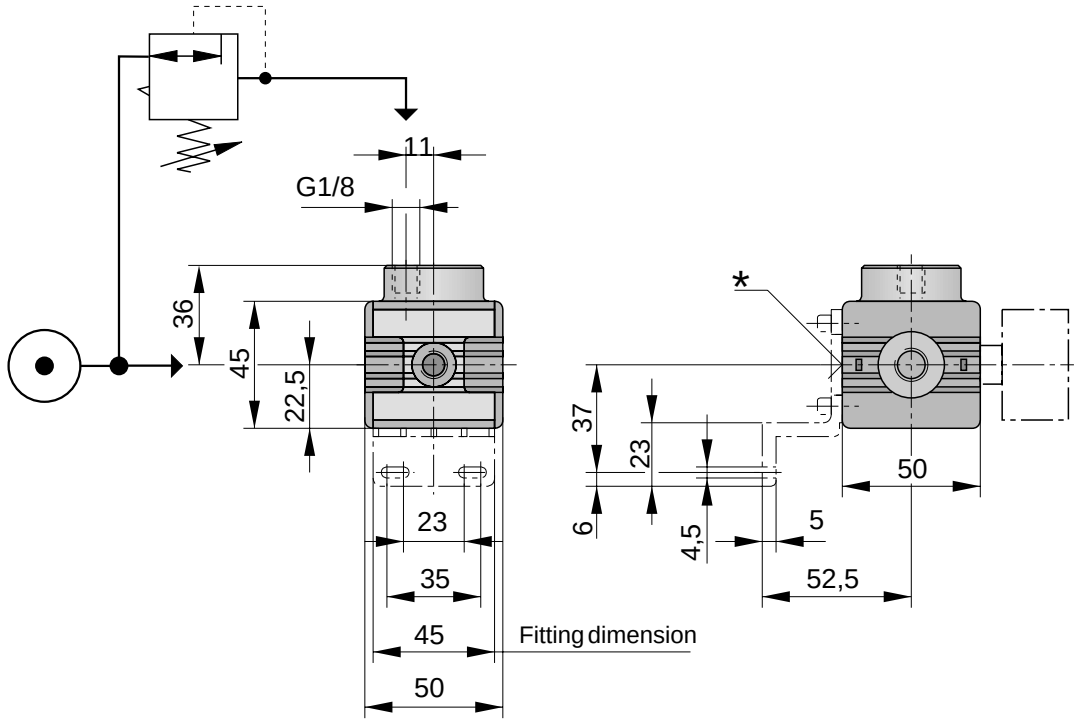

*) Two opposilte gauge ports G1/8 – On delivery the plug screw is not assembled.

Accessories

Gauge
Ø 40 mm, 0-10 bar, G1/8

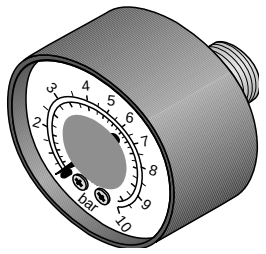

Order No.: KZ 8891

Accessories

Coupling kit
for connecting 2 single units

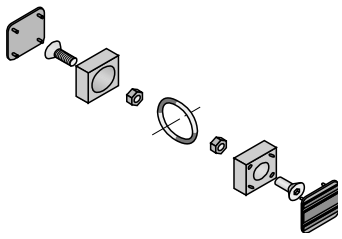

Order No.: PL 16959

Accessories

Recommended pilot pressure regulating valve Type SR-1/8

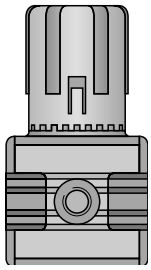

Order No.: PB 45349-000

Order Instructions

Description	Port size	**Type**	**Order No.**
Basic model	G1/4	**SRV-1/4**	**PB 45449-070**

Accessories

Description	**Order No.**
Gauge , Ø 40 mm, 0-10 bar, G1/8	**KZ 8891**
Mounting kit SRV	**PL 16965**
Coupling kit SRV	**PL 16959**
Recommended pilot pressure regulating valve SR-1/8	**PB 45349-000**
Porting block kit G1/4 / 3 x G1/8 (incl. Coupling kit) *)	**PL 16969**

*)With built-in check valve type: SXV on request

Pressure Regulating Valve

G3/8, G1/2

airfit comfort

CRV

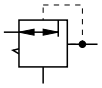

Characteristics			Pressures quoted as gauge pressure	
System			Pilot operated piston-type pressure regulator with secondary pressure relief and flow compensation -suitable for remote control	
Type			**CRV-3/8**	**CRV-1/2**
Port size			**G3/8**	**G1/2**
Installation			In any position	
Medium and ambient temperatures	ϑ_{min} ϑ_{max}	°C °C	0 +60	(further temperatures on request)
Weight (mass)		kg	0,5	0,5
Pneumatic Characteristic				
Operating pressure range - inlet pressure	$p_{1\,min}$ $p_{1\,max}$	bar bar	0 16	
Operating pressure range - outlet pressure	$p_{2\,min}$ $p_{2\,max}$	bar bar	0,5 8	
Min. pressure difference	p_1-p_2	bar	0,2	
Hysteresis p_1=10/p_2=0 Hysteresis p_1=10/p_2=8		bar bar	0,3 0,3	
Recommended flow[1)]	Q_n	l/min m³/h	**850** **51**	**1900** **114**
Maximum flow[2)]	Q	l/min m³/h	5300 318	7200 432
Own air usage			Low	
Recommended pilot pressure regulating valve			SR-1/4	

[1)] at p_2 = 6 bar and 25 m/s
[2)] at p_1 = 10 bar and p_2 = 6,3 bar and Δp = 1 bar

A1P630D00GY00X

Flow Characteristics Type: CRV-1/2

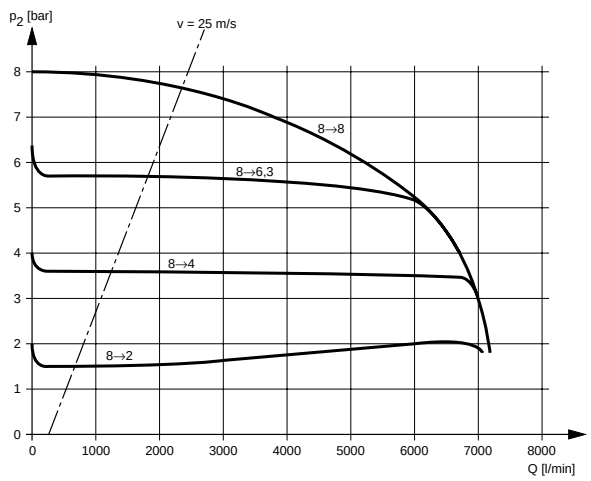

Pilot operated piston-type pressure regulator with secondary pressure relief and flow compensation -suitable for remote control.

- modern design
- bracket ready to fit
- ready for direct wall mounting
- variant with NPTF thread

For filter-water-separator see 5.19.005E
For pilot pressure regulating valve see 5.12.006E

The right to introduce technical modifications is reserved

HOERBIGER ORIGA

Accessories

Gauge
Ø 50, 0-10 bar, G1/4

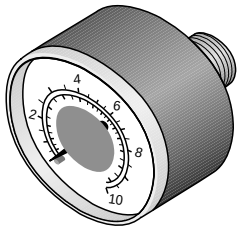

Order No.: KG 8011

Accessories

Coupling kit
for connecting 2 single units

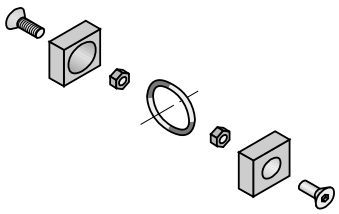

Order No.: PL 17608

Outlet pressure variations with varying inlet pressure

CRV-1/2

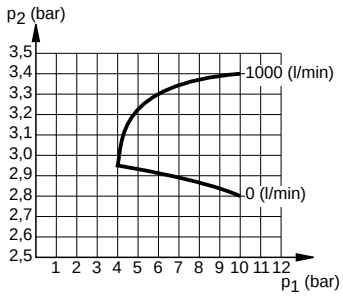

Dimensions (mm)

Type: CRV-1/2

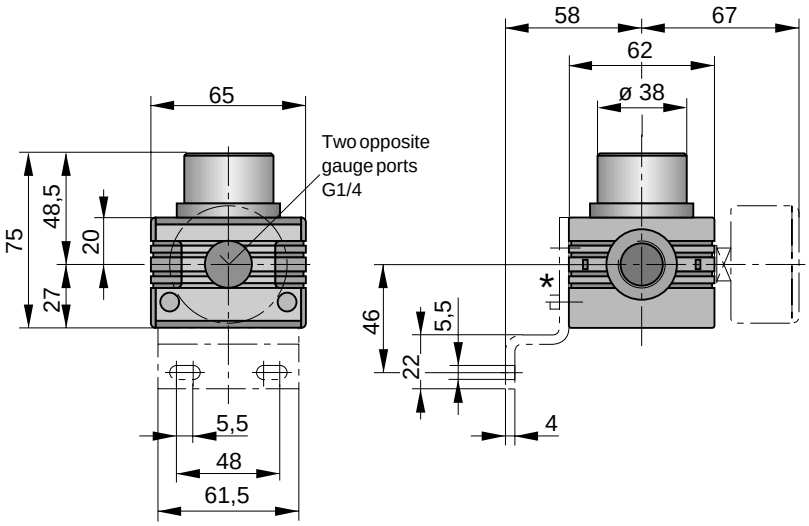

*) On delivery the plug is not asembled.

Order Instructions

Description	Port size	Type	Order No.
Basic model	G3/8	**CRV-3/8**	**PB 55549-070**
	G1/2	**CRV-1/2**	**PB 55649-070**
actuation without own air consumption - for actuation	G3/8	**CRV-3/8-SO**	**PB 55549-071**
by an electronic regulator (see data sheet 5.96.004)	G1/2	**CRV-1/2-SO**	**PB 55649-071**

Accessories

Description	Order No.
Gauge, Ø 50, 0-10 bar, G1/4	**KG 8011**
Mounting kit	**PL 17518**
Coupling kit	**PL 17608**
Porting block kit G1/2/G1/4	**PL 17607**
Porting block kit G1/2 and hole pattern for pressure switch (6.00.003)	**PL 17609**
Keylock complete	**PL 17127**
3/2 way shut-off valve (spool type valve) CDV-3/8-XS / CDV-1/2-XS	**PB 56849-000, PB 56949-000**
Adaptor set G3/4	**PL 17682**

Air Hydraulic Pump

Series LHP

Characteristics			Pressures quoted as gauge pressure
System			Air operated, self priming piston pump automatically controlled by demand
Type			**LHP 1**
Port size			**G1/8**
Installation			Axis of pump vertical, connections on top
Medium and ambient temperatures	ϑ_{min} ϑ_{max}	°C °C	0 +60 (further temperatures on request)
Weight (mass)		kg	1.30
Pneumatic Characteristic / Hydraulic Characteristic			
Operating pressure range (port P)	p_{min} p_{max}	bar bar	4 16
Feed pressure (port D)	p	bar	2-5 above set air side operating pressure in static operation, min. 3 in dynamic operation
Oil feed	Q	cm^3/min	max. 100 (für max. 100 lubricators)
Pump frequency	f	Strokes/min	0-45
Air consumption	Q_n	l/min	0-30 at 6 bar

2001 – discontinued

Installation Instructions

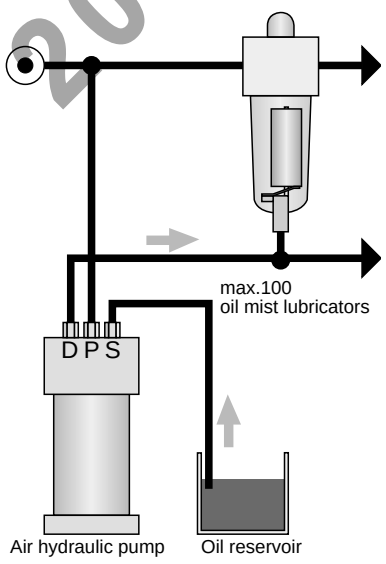

D = Oil pressure line
P = Connection for compressed air
S = Oil suction line

Dimensions (mm)

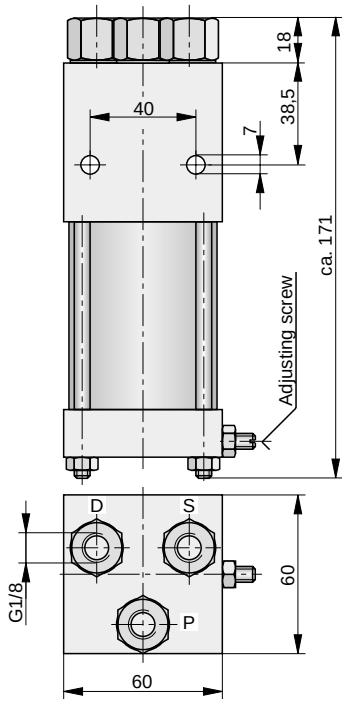

Application:
Continuous oil feed at a pressure which is higher than the air side operating pressure by a constant amount. The pump switches on and off automatically depending on the amount of oil required to refill the oil reservoir as a result of oil usage.

Notes on the Adjusting Screw:
Pump does not run, although air pressure is on: unscrew slotted screw until pump runs, then secure with locknut.

Pump runs too fast with short strokes: screw slotted screw in until pump runs normally, then secure with locknut.

Readjustment will be needed if inlet and outlet parameters are changed.

• Accessories for airfit prestige

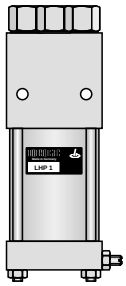

The air hydraulic pump is used for automatic refilling of lubricators with an automatic refilling device (Version-F).

Order No.: PB 05949-000

Data Sheet No. 5.61.001E

A1P126E00KY00X

The right to introduce technical modifications is reserved

Special Oil

for Pneumatic Lubricators

Viscosity VG32

A1P253E00KY00X

The right to introduce technical modifications is reserved

Technical Data	
Use	for all HOERBIGER lubricators systems Specially tried and tested for compatibility with valve and cylinder seals as well as polycarbonate plastic bowls.
Viscosity	Viscosity VG33 to ISO 3448 5° C 250 mm²/s (cst) 20° C 100 mm²/s (cst) 40° C 32 mm²/s (cst) when using below freezing point (0°C) it is necessary to consult us
Contents	1 litre

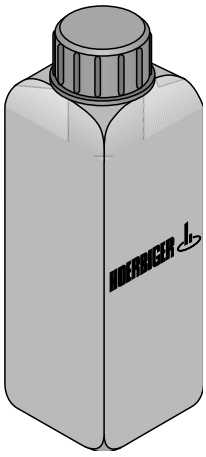

Contents: 1 litre

Order No.: KY 8766

Data Sheet No. 5.61.050E

HOERBIGER ORIGA

Drain Valve

Fully automatic
for condensate drainage

Assembly kit

airfit **drain**

DV-1/2i

Characteristics				Pressures quoted as gauge pressure
System				Float controlled condensate drain valve (fully automatic)
Material	Float controller			Plastic (PP-black)
	Housing			Brass/plastic
	Seals			Oil resistant rubber
Condensate drainage				- during operation when reaching a certain condensate level - during pressure relief - manual (by turning the drain cock)
Installation				Vertical
Mounting				In the bowl with a circlip
Weight (mass)			kg	0.06
Operating pressure range		p_{min} p_{max}	bar bar	0 16
Temperature		ϑ_{min} ϑ_{max}	°C °C	0 80

Installation Drawing

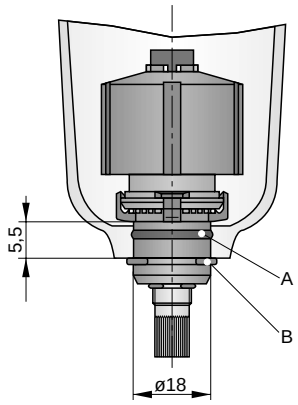

Installation Procedure

1. Lightly grease seal ring A before assembly.
2. Insert the drain valve into the bowl from the top.
3. Secure the drain valve outside the bowl with circlip B.

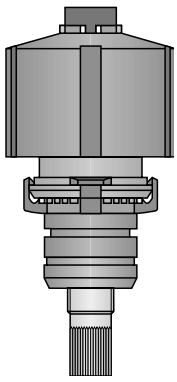

Float controlled drain valve for automatic condensate drainage in filter-water-separators.

For assembly in al plastic and metal bowls of HOERBIGER's AIRFIT comfort, prestige and magnum series as well as in other pneumatic filters with suitable installation dimensions.

Comprises:
Drain valve with seal ring,
Circlip

Order Instruction: Type: DV-1/2i Order No.: PL16165

For filter-water-separator see 5.20.010E, 5.20.011E
For product group list see A3P037E

Data Sheet No. 5.62.002E

HOERBIGER ORIGA

A1P170E00KY00X

The right to introduce technical modifications is reserved

Drip leg drain valve

G1/2, G1

Fully automatic for condensate drainage

airfit drain

DV-1/2e

Characteristics				Pressures quoted as gauge pressure
System				Float controlled condensate drain valve (fully automatic)
Type				**DV-1/2e**
Port size				**G1/2**
Material	Float controller			Stainless steel
	Housing			Aluminium
	Seals			Oil resistant rubber
Condensate drainage				- During operation when reaching a certain condensate level - Manual
Installation				Horizontal (see sketch)
Mounting				Double nipple
Weight (mass)			kg	1.12
Operating pressure range		p_{min} p_{max}	bar bar	0 20 (DV-1/2e)
Medium and ambient temperatures		ϑ_{min} ϑ_{max}	°C °C	0 80

Installation Instructions

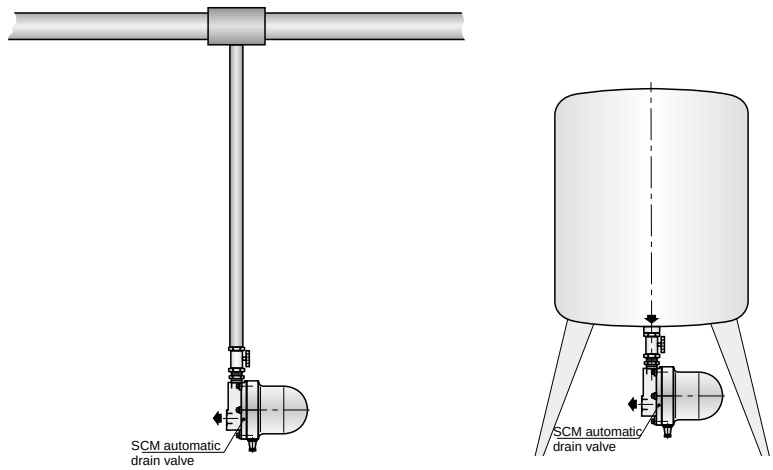

Float-type drain valve for fully automatic drainage of condensate from compressed air lines and receivers.

Recommended location:
Normally at the lowest point, where condensate and oil collect.

- Highly polluted condensate is no problem
- Float made of stainless steel
- Additonal manual drain
- Oil resistant seals

Condensate Capacity

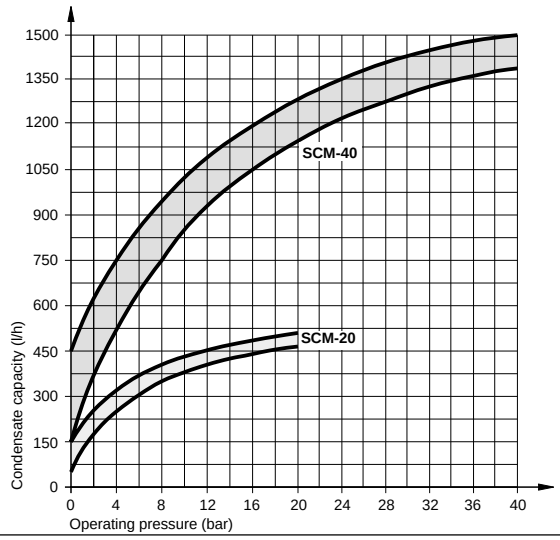

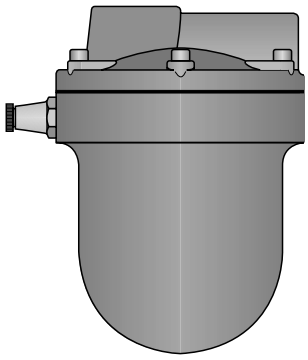

HOERBIGER ORIGA

A1P444E00KY00X

The right to introduce technical modifications is reserved

Data Sheet No. 5.62.003E-1

Dimensions (mm)
Type: DV-1/2e

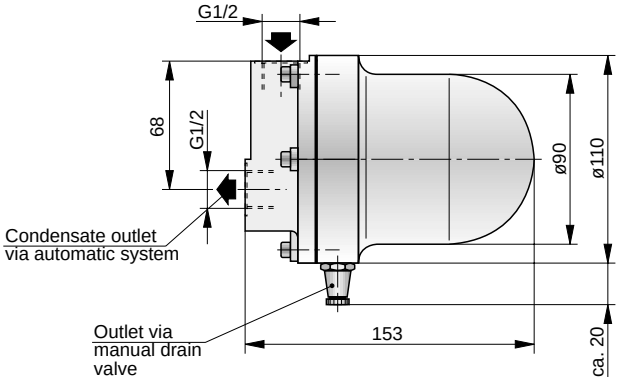

Order Instructions: DV-1/2e PL 16705

Condensate Management

G3/4

Electronic Drain Valve

airfit drain

DV

Characteristics			Pressures quoted as gauge pressure	
System			Electronically controlled condensate drain valve without air consumption	
Type			**DV-3/4e**	**DV-3/4eht** [1]
Port size			G3/4 BSP external thread or G1/2 NPTF with gasket	
Suitable for max. compressor capacity max. dryer capacity		 m^3/min. m^3/min.	 5 10	
Short term peak condensate volume		l/h	30 at 7 bar	
Condensate temperature		°C	max. 60	
Ambient temperature		°C	1-60	
Pressure range		bar	0.8-16	
Weight (mass)		kg	1	
Electrical connection (self adjusting)			24-230 V DC, 80-230 V AC	
Power consumption		VA	5	
Connection		IP	65	
Resistance free contact			max. 300 V AC/DC	
Electronic relais (opens at failure)			max. 0.1 A	

[1] Viton version, parts in contact with medium are coated.

A1P610E00KY00X

The right to introduce technical modifications is reserved

Installation instruction:
Please note the instruction manual.
Highly polluted condensate requires the uste of a strainer (particle separation).

- For external application
- airfit design
- Level dependant control
- Universal voltage for international use
- Version for aggressive media

HOERBIGER ORIGA

Dimensions (mm)

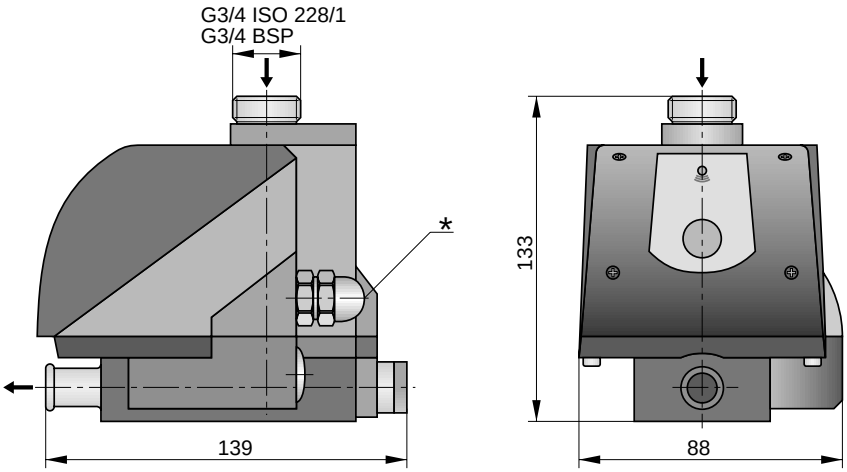

* Electronic connection Pg 9

Order Instructions

Description	Port size	**Type**	**Order No.**
Basic model	G3/4	**DV-3/4e**	**PBZ 5049-000**
For aggressive media *	G3/4	**DV-3/4eht**	**PBZ 5049-001**

* Please consult us before operating this device.

Condensate Management

Oil-water separation

airfit drain

DWS

Characteristics			Pressures quoted as gauge pressure				
System			Gravity based oil-water separation system, additionally with activated carbon				
Type			DWS-120	DWS-250	DWS-450	DWS-900	DWS-1800
Volume in liters			**25**	**50**	**75**	**150**	**300**
Condensor capacity in Nm^3/h [1]			120	250	450	900	1800
Condensate connection (pressure less)			für Schlauch ø DI = 25 mm				
Residual oil [2]			bis <20 mg/l nach DIN 38409 H18				

[1] Depending on condensor type and lubricant.
– Please consult us for optimal sizing of your unit.
[2] When properly used (not suitable for emulsions) operated and maintained.

- airfit design
- Disposal of activated carbon elements
- Reduction of up to 97% of materials to be disposed

HOERBIGER ORIGA

A1P611E00KY00X

The right to introduce technical modifications is reserved

Dimensions (mm)

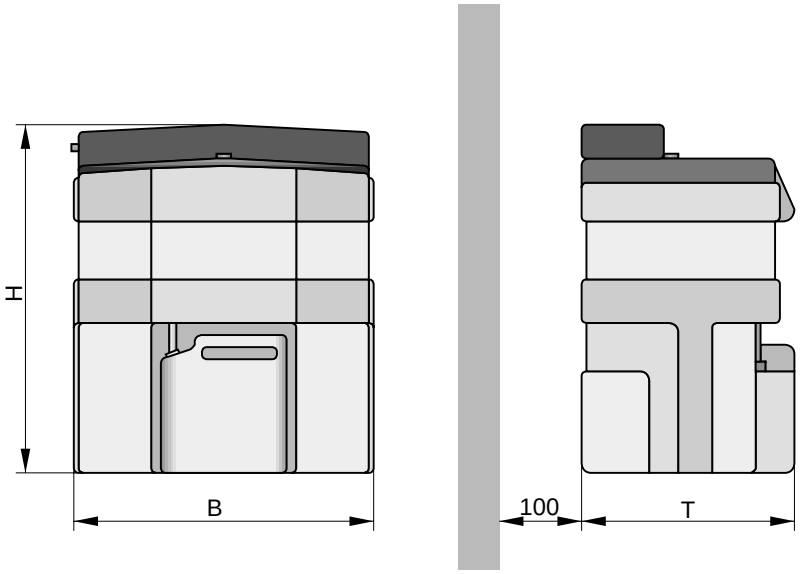

Table Dimensions (mm)

Dimensin	Type DWS-120	DWS-250	DWS-450	DWS-900	DWS-1800
B	345	440	477	665	775
H	555	655	725	840	961
T	300	430	460	510	650

Order Instructions

Description	Port size	**Type**	**Order No.**
Basic model	for tubing ø DI = 25 mm	**DWS-120**	**PBZ 6049-000**
		DWS-250	**PBZ 6149-000**
		DWS-450	**PBZ 6249-000**
		DWS-900	**PBZ 6349-000**
		DWS-1800	**PBZ 6449-000**

Accessories

Description		**Type**	**Order No.**
Heating system 230 V/50 Hz *	0,2 KW	**DWS-120**	**KG 3013**
	0,5 KW	**DWS-250**	**KG 3014**
		DWS-450	**KG 3014**
	1 KW	**DWS-900**	**KG 3015**
		DWS-1800	**KG 3015**
Mounting rail			**on request**

* 115 V/60 Hz on request

Relief Valve

Adjustment: 1-4 or 3-7 bar

Series USV

Characteristics			Pressures quoted as gauge pressure	
System			Spring loaded poppet valve with adjustable opening pressure	
Type			**USV-1/8**	**USV-1/4**
Port size			**G1/8**	**G1/4**
Installation			In any position	
Temperature	ϑ_{min} ϑ_{max}	°C °C	0 +90	
Medium			Compressed air	
Opening pressure		bar	1-4 or 3-7 (adjustable)	

Dimensions (mm)

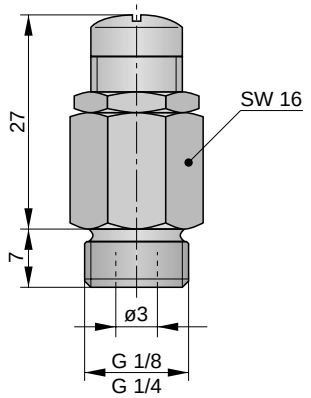

Order Instructions

Description	Port size	**Type**	**Order No.**
Relief Valve	G1/8	**USV-1/8 (1-4 bar)**	**KY 4093**
Relief Valve	G1/8	**USV-1/8 (3-7 bar)**	**KY 4065**
Relief Valve	G1/4	**USV-1/4 (1-4 bar)**	**KY 4094**
Relief Valve	G1/4	**USV-1/4 (3-7 bar)**	**KY 4066**

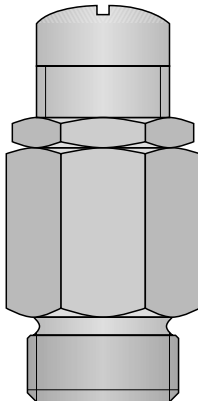

A1P285E00KY00X

The right to introduce technical modifications is reserved

HOERBIGER ORIGA

PNEUMATIC
GROUP

SUBMICROFILTER, ACTIVATED CARBON FILTER G1/8-G2 SERIES

airfit micro

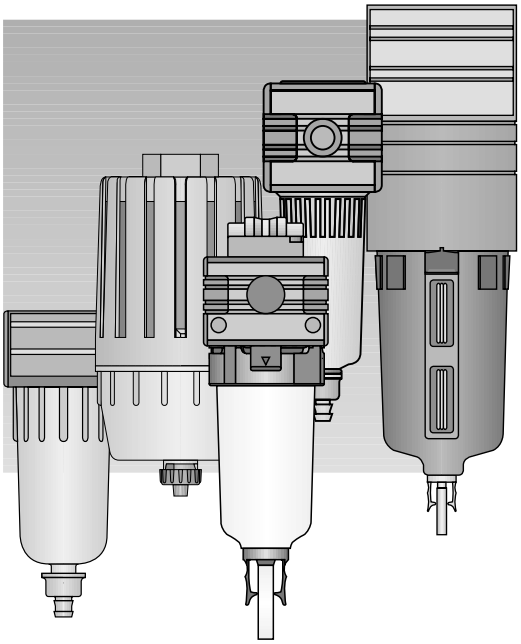

HOERBIGER
ORIGA

Description		Port size	Recommended flow (l/min)	**Type**	Data Sheet No.
Submicrofilter	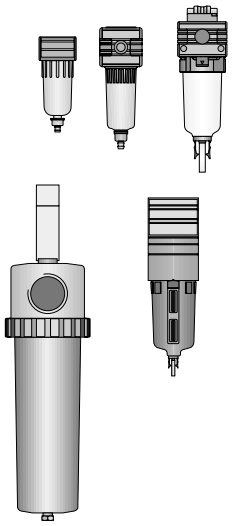	G1/8	125	**MF 007-1/8**	5.81.002E
		G1/4	125	**MF 007-1/4**	
		G1/8	200	**MF 012-1/8**	5.81.003E
		G1/4	200	**MF 012-1/4**	
		G3/8	200	**MF 012-3/8**	
		G3/8	600	**MF 036-3/8**	5.81.004E
		G1/2	600	**MF 036-1/2**	
		G1/2	1835	**MF 110-1/2**	5.81.005E
		G3/4	3080	**MF 185-3/4**	
		G1	3080	**MF 185-1**	
		G1	360	**MF360-1-...**	5.81.006E
		G11/4	480	**MF 480-11/4-...**	
		G11/2	720	**MF720-11/2-...**	
		G2	1080	**MF 1080-2-...**	
		G2	1440	**MF 1440-2-...**	
Activated carbon filter	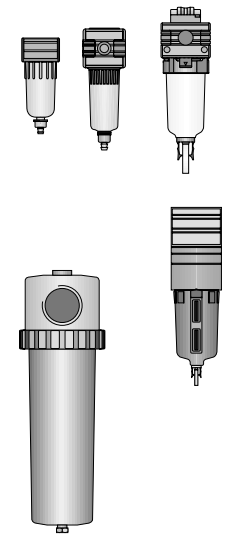	G1/8	125	**MC007-1/8**	5.81.002E
		G1/4	125	**MC 007-1/4**	
		G1/8	200	**MC 012-1/8**	5.81.003E
		G1/4	200	**MC 012-1/4**	
		G3/8	200	**MC 012-3/8**	
		G3/8	600	**MC 036-3/8**	5.81.004E
		G1/2	600	**MC 036-1/2**	
		G1/2	1835	**MC 110-1/2**	5.81.005E
		G3/4	3080	**MC 185-3/4**	
		G1	3080	**MC 185-1**	
		G1	360	**MC360-1-...**	5.81.007E
		G11/4	480	**MC 480-11/4-...**	
		G11/2	720	**MC720-11/2-...**	
		G2	1080	**MC 1080-2-...**	
		G2	1440	**MC 1440-2-...**	
Exhaust-silencer		G1/4	Please see diagram on Data Sheet	**AF-08**	5.89.002E
		G3/8		**AF-10**	
		G1/2		**AF-15**	
		G3/4		**AF-20**	
		G1		**AF-25**	
		G2		**AF-50**	

A3P120E71EAA00X

The right to introduce technical modifications is reserved

Table of Contents see 5.00.001E

Submicro-filter and Aktivated Carbon Filter

G1/8-G1/4

airfit micro
– for series AIRFIT light

Series

MF...-..

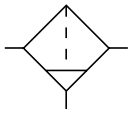

MC...-..

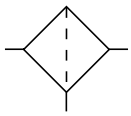

Characteristics			Pressures quoted as gauge pressure			
System			**Submicrofilter**		**Activated carbon filter**	
Type			**MF 007-1/8**	**MF 007-1/4**	**MC 007-1/8**	**MC 007-1/4**
Port size			G1/8	G1/4	G1/8	G1/4
Max. condensate capacity		cm^3	12		–	
Condensate drainage			Manual			
Installation			Vertical, bowl at the bottom			
Medium and ambient temperatures	ϑ_{min} ϑ_{max}	°C °C	0 (at 10 bar) +50		0 (at 10 bar) +40	
Weight (mass)			0.1		0.1	
Pneumatic Characteristic						
Operating pressure range	p_{min} p_{max}	bar bar	0 10		0 10	
Recommended flow at 6 bar	Q_{max}	l/min m^3/h	125 7.5		125 7.5	
Pressure drop at recommended flow	Δp	bar	ab 0.1 (new element)		0.1	
Degree of filtration at recommended flow	η	%	Over 99.99999%, related to 0.01 µm			
Residual oil amount (input conc. $3mg/m^3$)		mg/m^3	< 0.01		0.003 p.p.m in combination with MF	

Installation Procedure

To increase the life span of the filter elements, we recommend the following order.

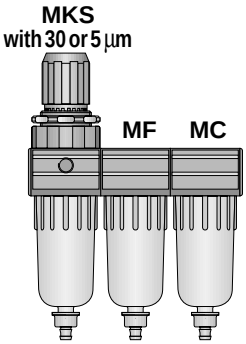

Flow direction →

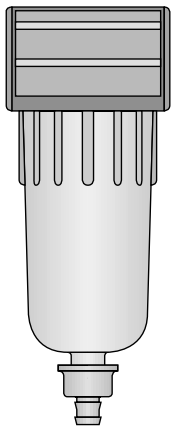

- Ultrafilter inside
- Airfit design
- 3 year warranty
- Version with NPTF thread

For product group list see 5.81.001E
For filter-water-separators see 5.09.005E

Data Sheet No. 5.81.002E-1

A1P591E00KY00X

The right to introduce technical modifications is reserved

Dimensions (mm)

Type: MF 007-..
MC 007-..

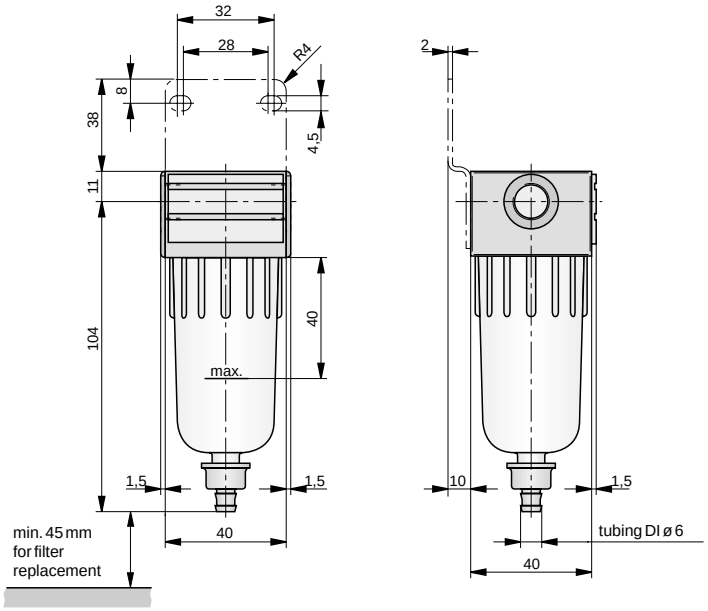

Accessories

Coupling kit

Order No.: PL 16755

Accessories

Coupling kit

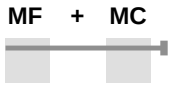

Order No.: PL 16669

Order Instructions

Description	Port size	Order Instructions Type	Order No.
Submicrofilter – basic model	G1/8	**MF 007-1/8**	**PB 37349-000**
	G1/4	**MF 007-1/4**	**PB 37449-000**
Aktivated carbon filter – basic model	G1/8	**MC 007-1/8**	**PB 37849-000**
	G1/4	**MC 007-1/4**	**PB 37949-000**

Accessories

Mounting kit	**PL 16859**

Submicro-filter and Aktivated Carbon Filter

G1/8, G1/4, G3/8

airfit micro
– for series AIRFIT swing

Series

MF...-..

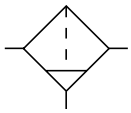

MC...-..

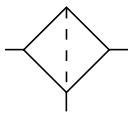

Characteristics			Pressures quoted as gauge pressure					
System			**Submicrofilter**			**Activated carbon filter**		
Type			MF012-1/8	MF012-1/4	MF012-3/8	MC012-1/8	MC012-1/4	MC012-3/8
Port size			G1/8	G1/4	G3/8	G1/8	G1/4	G3/8
Max. condensate capacity		cm^3	13			–		
Condensate drainage			Manual					
Installation			Vertical, bowl at the bottom					
Medium and ambient temperatures	ϑ_{min} ϑ_{max}	°C °C	0 (at 10 bar) +50			0 (at 10 bar) +40		
Weight (mass)			0.3			0.3		
Pneumatic Characteristic								
Operating pressure range	p_{min} p_{max}	bar bar	0 10			0 10		
Recommended flow at 6 bar	Q_{max}	l/min m^3/h	200 12			200 12		
Pressure drop at recommended flow	Δp	bar	ab 0.1 (new element)			0.1		
Degree of filtration at recommended flow	η	%	Over 99.99999%, related to 0.01 µm					
Residual oil amount (input conc. $3mg/m^3$)		mg/m^3	< 0.01			0.003 p.p.m in combination with MF		

Installation Procedure

To increase the life span of the filter elements, we recommend the following order.

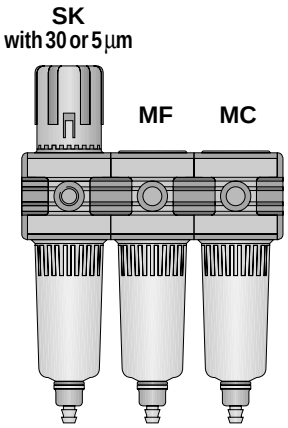

Flow direction →

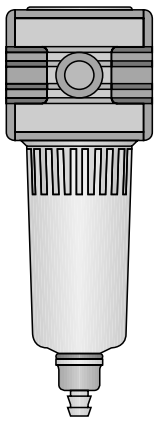

- Ultrafilter inside
- Airfit design
- 3 year warranty
- Version with NPTF thread

For product group list see 5.81.001E
For filter-water-separators see 5.12.005E

Data Sheet No. 5.81.003E-1

A1P592E00KY00X

The right to introduce technical modifications is reserved

Dimensions (mm)

Type: MF 012-..
MC 012-..

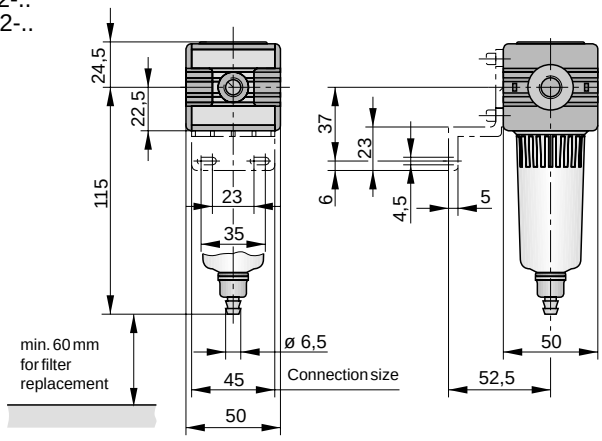

Accessories

Porting block kit

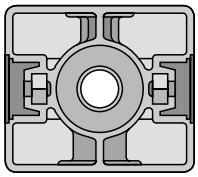

Order No.: PL 16969

3/2 way shut-off valve

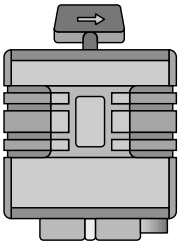

Order No.: PB 46749-101 (G1/4)
PB 46849-101 (G3/8)

Bowl guard kit

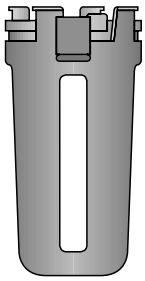

Order No.: PL 16970

Order Instructions

Description	Port size	Order Instructions Type	Order No.
Submicrofilter – basic model	G1/8	**MF 012-1/8**	**PB 49049-000**
	G1/4	**MF 012-1/4**	**PB 49149-000**
	G3/8	**MF 012-3/8**	**PB 49249-000**
Submicrofilter – with metal bowl	G1/8	**MF 012-1/8-D**	**PB 49049-003**
	G1/4	**MF 012-1/4-D**	**PB 49149-003**
	G3/8	**MF 012-3/8-D**	**PB 49249-003**
Submicrofilter – with metal bowl (sight glass)	G1/8	**MF 012-1/8-E**	**PB 49049-004**
	G1/4	**MF 012-1/4-E**	**PB 49149-004**
	G3/8	**MF 012-3/8-E**	**PB 49249-004**
Aktivated carbon filter – basic model	G1/8	**MC 012-1/8**	**PB 49349-000**
	G1/4	**MC 012-1/4**	**PB 49449-000**
	G3/8	**MC 012-3/8**	**PB 49549-000**
Aktivated carbon filter – with metal bowl	G1/8	**MC 012-1/8-D**	**PB 49349-003**
	G1/4	**MC 012-1/4-D**	**PB 49449-003**
	G3/8	**MC 012-3/8-D**	**PB 49549-003**
Aktivated carbon filter – with metal bowl (sight glass)	G1/8	**MC 012-1/8-E**	**PB 49349-004**
	G1/4	**MC 012-1/4-E**	**PB 49449-004**
	G3/8	**MC 012-3/8-E**	**PB 49549-004**

Accessories

Mounting kit	**PL 16965**
Coupling kit	**PL 16959**

Submicro-filter and Aktivated Carbon Filter

G3/8, G1/2 (G3/4)

airfit micro

– for series AIRFIT comfort

Characteristics			Pressures quoted as gauge pressure			
System			**Submicrofilter**		**Activated carbon filter**	
Type			**MF 036-3/8**	**MF 036-1/2**	**MC 036-3/8**	**MC 036-1/2**
Port size			G3/8	G1/2	G3/8	G1/2
Max. condensate capacity		cm^3	48		–	
Condensate drainage			Manual, automatic		manual	
Installation			Vertical, bowl at the bottom			
Medium and ambient temperatures	ϑ_{min} ϑ_{max}	°C °C	0 (at 10 bar) +50		0 (at 10 bar) +40	
Weight (mass)			0.6		0.6	
Pneumatic Characteristic						
Operating pressure range	p_{min} p_{max}	bar bar	0 10		0 10	
Recommended flow at 6 bar	Q_{max}	l/min m^3/h	600 36		600 36	
Pressure drop at recommended flow	Δp	bar	ab 0.1 (new element)		0.1	
Degree of filtration at recommended flow	η	%	Over 99.99999%, related to 0.01 µm			
Residual oil amount (input conc. $3 mg/m^3$)		mg/m^3	< 0.01		0.003 p.p.m in combination with MF	

Series

MF...-..

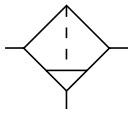

MC...-..

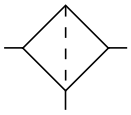

Installation Procedure

To increase the life span of the filter elements, we recommend the following order.

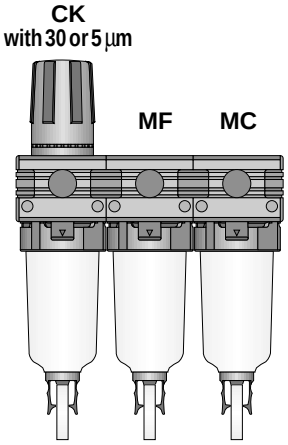

Flow direction →

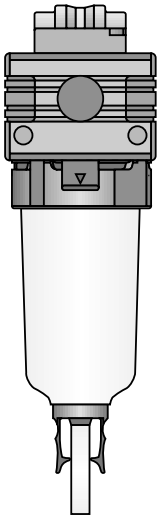

- Ultrafilter inside
- Airfit design
- Contamination indicator standard
- 3 year warranty
- Version with NPTF thread

For product group list see 5.81.001E
For filter-water-separators see 5.19.011E

Data Sheet No. 5.81.004E-1

A1P593E00KY00X

The right to introduce technical modifications is reserved

Dimensions (mm)

Type: MF 036-..
MC 036-..

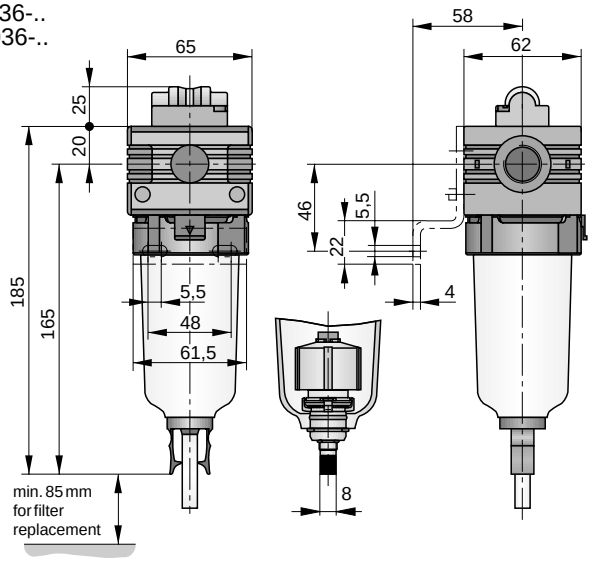

Accessories

Porting block kit

Order No.: PL 17607

3/2 way shut-off valve

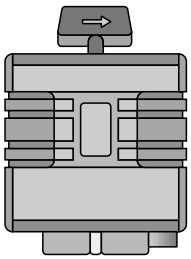

Order No.: **PB 56849-000** (G3/8)
PB 56949-000 (G1/2)

Bowl guard kit

Order No.: PL 17680

Order Instructions

Description	Port size	Order Instructions Type	Order No.
Submicrofilter	G3/8	**MF 036-3/8-V**	**PB 59249-010**
– standard with service life indicator	G1/2	**MF 036-1/2-V**	**PB 59349-010**
Submicrofilter	G3/8	**MF 036-3/8-AV**	**PB 59249-012**
– additionally with automatic drain	G1/2	**MF 036-1/2-AV**	**PB 59349-012**
Submicrofilter	G3/8	**MF 036-3/8-DAV**	**PB 59249-015**
– additionally with metal bowl and automatic drain	G1/2	**MF 036-1/2-DAV**	**PB 59349-015**
Submicrofilter – additionally with metal bowl	G3/8	**MF 036-3/8-EAV**	**PB 59249-016**
(sight glass) and automatic drain	G1/2	**MF 036-1/2-EAV**	**PB 59349-016**
Aktivated carbon filter – basic model	G3/8	**MC 036-3/8**	**PB 59549-000**
	G1/2	**MC 036-1/2**	**PB 59649-000**
Aktivated carbon filter – with metal bowl	G3/8	**MC 036-3/8-D**	**PB 59549-003**
	G1/2	**MC 036-1/2-D**	**PB 59649-003**
Aktivated carbon filter	G3/8	**MC 036-3/8-E**	**PB 59549-004**
– with metal bowl (sight glass)	G1/2	**MC 036-1/2-E**	**PB 59649-004**

Accessories

Mounting bracket	**PL 17518**
Coupling kit	**PL 17608**
Adapter kit G3/4	**PL 17682**

Submicro-filter and Aktivated Carbon Filter

G1/2, G3/4, G1

airfit micro

– for series AIRFIT prestige

Characteristics			Pressures quoted as gauge pressure					
System			**Submicrofilter**			**Activated carbon filter**		
Type			MF110-1/2	MF185-3/4	MF185-1	MC110-1/2	MC185-3/4	MC185-1
Port size			G1/2	G3/4	G1	G1/2	G3/4	G1
Max. condensate capacity		cm^3	155			–		
Condensate drainage			Manual, automatic			manual		
Installation			Vertical, bowl at the bottom					
Medium and ambient temperatures	ϑ_{min} ϑ_{max}	°C °C	0 (at 10 bar) +50			0 (at 10 bar) +40		
Weight (mass)			1.5			1.5		
Pneumatic Characteristic								
Operating pressure range	p_{min} p_{max}	bar bar	0 10			0 10		
Recommended flow at 6 bar	Q_{max}	l/min m^3/h	1835 110	3080 185	3080 185	1835 110	3080 185	3080 185
Pressure drop at recommended flow	Δp	bar	ab 0.1 (new element)			0.1		
Degree of filtration at recommended flow	η	%	Over 99.99999%, related to 0.01 µm					
Residual oil amount (input conc. $3mg/m^3$)		mg/m^3	< 0.01			0.003 p.p.m in combination with MF		

Series

MF...-..

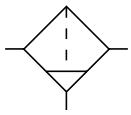

MC...-..

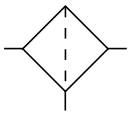

Installation Procedure

To increase the life span of the filter elements, we recommend the following order.

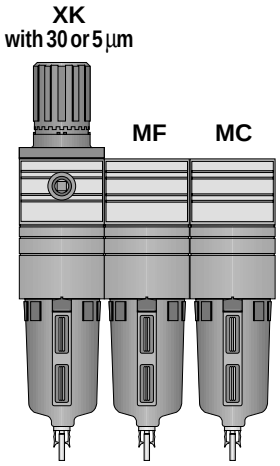

Flow direction →

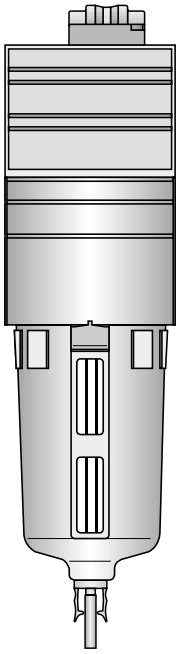

- Ultrafilter inside
- Airfit design
- Contamination indicator standard
- 3 year warranty
- Version with NPTF thread

For product group list see 5.81.001E
For filter-water-separators see 5.22.005E

Data Sheet No. 5.81.005E-1

A1P594E00KY00X

The right to introduce technical modifications is reserved

HOERBIGER ORIGA

Dimensions (mm)

Type: MF 110-1/2, MF 185-..
MC 110-1/2, MC 185-..

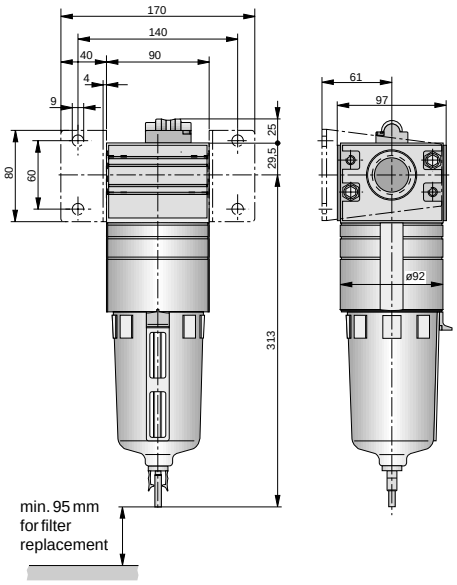

Accessories

Coupling kit

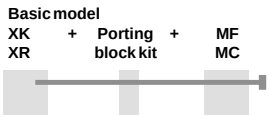

Order No.: PL 15672

Accessories

Coupling kit

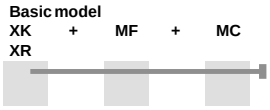

Order No.: PL 16581

Coupling kit

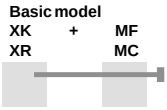

Order No.: PL 15670

Coupling kit

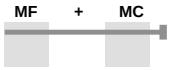

Order No.: PL 16580

Order Instructions

Description	Port size	Order Instructions Type	Order No.
Submicrofilter	G1/2	**MF 110-1/2-EV**	**PB 37249-110**
– standard with metal bowl (sight glass)	G3/4	**MF 185-3/4-EV**	**PB 37049-110**
– standard with service life indicator	G1	**MF 185-1-EV**	**PB 37149-110**
Submicrofilter	G1/2	**MF 110-1/2-AEV**	**PB 37249-112**
– additionally with automatic drain	G3/4	**MF 185-3/4-AEV**	**PB 37049-112**
– standard with service life indicator	G1	**MF 185-1-AEV**	**PB 37149-112**
Aktivated carbon filter – basic model	G1/2	**MC 110-1/2-E**	**PB 37749-100**
– standard with metal bowl (sight glass)	G3/4	**MC 185-3/4-E**	**PB 37549-100**
	G1	**MC 185-1-E**	**PB 37649-100**

Accessories

Mounting bracket			**PL 15669**
Porting block kit *			**PL 15672**
3/2 way shut-off valve *	G3/4	**XDV-3/4**	**PB 33849-100**
3/2 way shut-off valve *	G1	**XDV-1**	**PB 33949-100**

* Please consult us for mounting possibilities and coupling kits.

Submicro-filter

G1-G2

airfit micro

– for series AIRFIT magnum

Series

MF

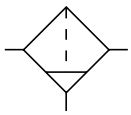

Characteristics			Pressures quoted as gauge pressure				
System			MF, MF+				
Type			Standard with metal bowl (with sight glass for MF1440), econometer and automatic drain valve DV-1/2i				
			MF360-1 -DAV	**MF480-11/4 -DAV**	**MF720-11/2 -DAV**	**MF1080-2 -DAV**	**MF1440-2 -EAV**
Weight (mass)		kg	2.5	2.5	7	7	10.7
Condensate drainage			Automatic (float type)				
Type			Version with Economiser and electronically controlled drain valve DV-3/4e				
			MF360-1 -DAV+	**MF480-11/4 -DAV+**	**MF720-11/2 -DAV+**	**MF1080-2 -DAV+**	**MF1440-2 -EAV+**
Weight (mass)		kg	3.3	3.3	7.8	7.8	11.5
Condensate drainage			Automatic (electronically controlled)				
General Characteristics							
Port size			G1	G11/4	G11/2	G2	G2
Installation			Vertical, bowl at the bottom				
Medium and ambient temperatures	ϑ_{min} ϑ_{max}	°C °C	0 +60				
Housing material			Al				
Pneumatic Characteristic							
Operating pressure range	p_{min} p_{max}	bar bar	0 16				
Flow at 7 bar	maximal Q	m^3/h	360	480	720	1080	1440
	nominal Q	m^3/h	270	360	480	720	1080
Pressure drop at recommended flow	Δp	bar	0.1 new element				
Effectivity at 20°C, 7 bar		mg/m^3 *	0.03				
Residual oil content	h	%	> 99,99999% related to 0.01 µm				

*) m^3 related to 1 bar absolute and 20°C

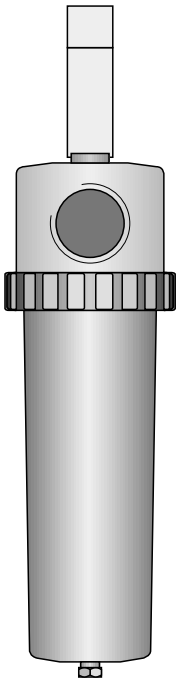

- Ultrafilter inside
- Airfit design
- 5 year warranty on material durability

Installation Procedure

To increase the life span of the filter elements, we recommend the following order

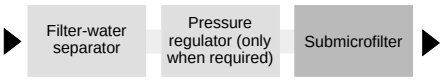

For product group list see 5.81.001E

Data Sheet No. 5.81.006E-1

A1P614E00KY0X

The right to introduce technical modifications is reserved

HOERBIGER ORIGA

Dimensions

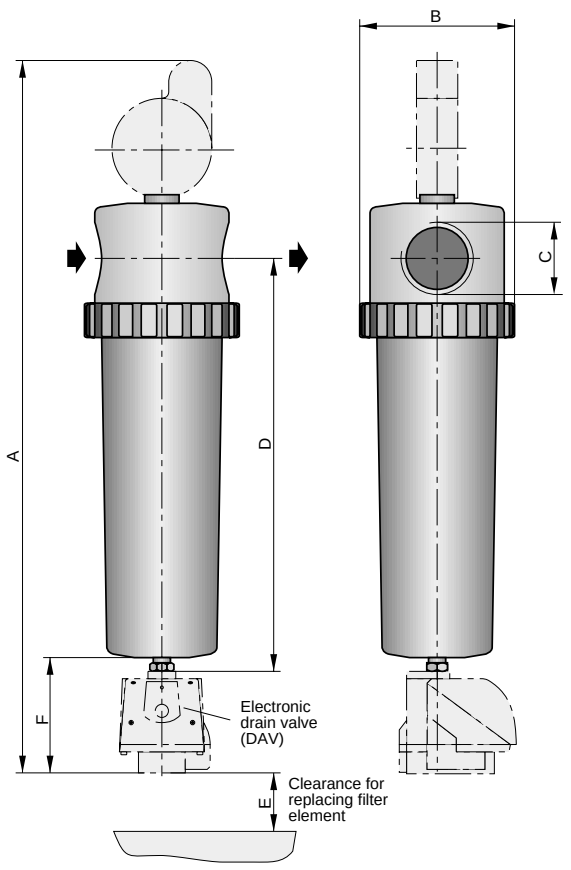

Dimension Table (mm)

Type	A	B	C	D	E	F
MF360-1-DAV	430	110	G1	310	160	25
MF480-11/4-DAV	430	110	G11/4	310	200	25
MF720-11/2-DAV	585	150	G11/2	415	200	25
MF1080-2-DAV	585	150	G2	415	280	25
MF1440-2-EAV	720	160	G2	550	450	30
MF360-1-DAV+	575	110	G1	430	160	145
MF480-11/4-DAV+	575	110	G11/4	430	200	145
MF720-11/2-DAV+	735	150	G11/2	535	200	145
MF1080-2-DAV+	735	150	G2	535	280	145
MF1440-2-EAV+	865	160	G2	665	450	145

Order Instructions

Description	Port size	Order Instructions	
		Type	**Order No.**
Basic model with metal bowl, Econometer and automatic drain valve DV-1/2i	G1	**MF360-1-DAV**	**PBZ 0049-000**
	G11/4	**MF480-11/4-DAV**	**PBZ 0149-000**
	G11/2	**MF720-11/2-DAV**	**PBZ 0249-000**
	G2	**MF1080-2-DAV**	**PBZ 0349-000**
	G2	**MF1440-2-EAV *)**	**PBZ 0449-002**
Version with Economiser and electronically controlled drain valve DV-3/4e	G1	**MF360-1-DAV+**	**PBZ 0049-001**
	G11/4	**MF480-11/4-DAV+**	**PBZ 0149-001**
	G11/2	**MF720-11/2-DAV+**	**PBZ 0249-001**
	G2	**MF1080-2-DAV+**	**PBZ 0349-001**
	G2	**MF1440-2-EAV+ *)**	**PBZ 0449-003**

*) metal bowl with sight glass

Accessories

Description	**Order No.**
Mounting kit	**on request**
Programmer for parameter input for the Economisers (for types MF+)	**on request**
Mounting accessories	**Commercially available double nipple**

Aktivated Carbon Filter

G1-G2

airfit micro

– for series AIRFIT magnum

Series

MC...-..

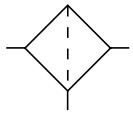

Characteristics			Pressures quoted as gauge pressure				
System			MC				
Type			Standard with metal bowl (with sight glass for MF1440)				
			MC360-1-D	**MC480-11/4-D**	**MC720-11/2-D**	**MC1080-2-D**	**MF1440-2-E**
Weight (mass)		kg	2.5	2.5	7	7.2	10.9
Installation			Vertical, bowl at the bottom				
Medium and ambient temperatures	ϑ_{min} ϑ_{max}	°C °C	0 +40				
Port size *)			G1	G11/4	G11/2	G2	G2
Housing material			Al				
Pneumatic Characteristic							
Operating pressure range	p_{min} p_{max}	bar bar	0 16				
Recommended flow at 7 bar	maximal Q	m^3/h	360	480	720	1080	1440
	nominal Q	m^3/h	270	360	480	720	1080
Pressure drop at recommended flow	Δp	bar	0.2 new element				
Residual oil content			0.003 p.p.m in combination with MF				

*) NPTF on request

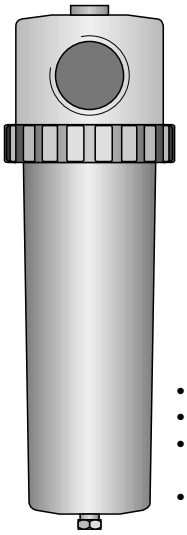

- Ultrafilter inside
- Airfit design
- 5 year warranty on material durability
- Version with NPTF thread

Installation Procedure

To increase the life span of the filter elements, we recommend the following order

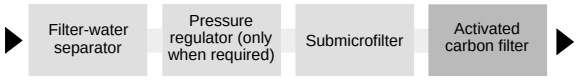

For product group list see 5.81.001E

Data Sheet No. 5.81.007E-1

A1P615E00KY0X

The right to introduce technical modifications is reserved

HOERBIGER ORIGA

Dimensions

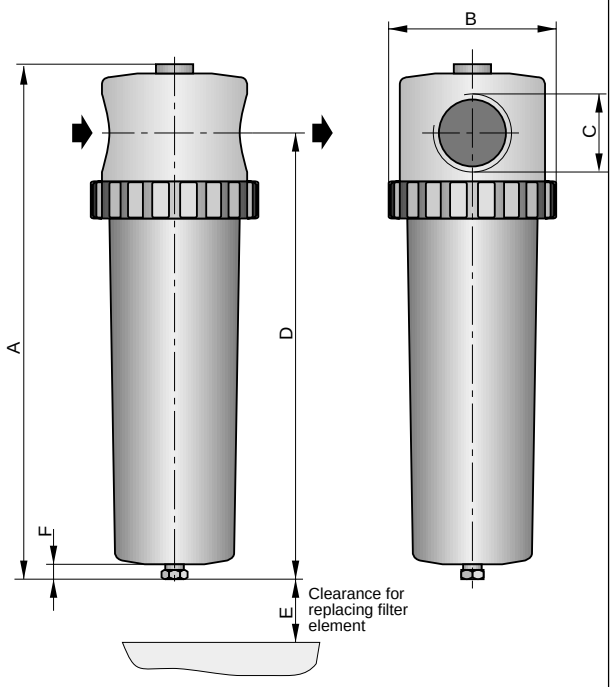

Dimension Table (mm)

Type	A	B	C	D	E	F
MC360-1-D	355	110	G1	290	160	5
MC480-11/4-D	355	110	G11/4	290	200	5
MC720-11/2-D	470	150	G11/2	395	200	5
MC1080-2-D	470	150	G2	395	280	5
MC1440-2-E	610	160	G2	535	450	15

Order Instructions

Description	Port size	Order Instructions	
		Type	**Order No.**
Basic model with metal bowl	G1	**MC360-1-D**	**PBZ 1049-000**
	G11/4	**MC480-11/4-D**	**PBZ 1149-000**
	G11/2	**MC720-11/2-D**	**PBZ 1249-000**
	G2	**MC1080-2-D**	**PBZ 1349-000**
	G2	**MC1440-2-E *)**	**PBZ 1449-001**

*) metal bowl with sight glass

Accessories

Description	**Order No.**
Mounting kit	**on request**
Mounting accessories	**Commercially available double nipple**

PNEUMATIC
GROUP

REFRIGERATION, MEMBRANE AND ADSORPTION DRYERS

airfit dry

HOERBIGER
ORIGA

Membrane Dryers

Description	Port Size	Nominal Flow at 7 bar and 35°C	**Type**	Data Sheet No.
Membrane dryers	G1/4	2,5	**SDM2-1/4-R**	5.82.004
with return pipe	G1/4	5	**SDM5-1/4-R**	
– fitting the airfit swing Series				
Membrane dryers [1]	G1/2	10	**CDM10-1/2-R**	5.82.005
with return pipe	G1/2	15	**CDM15-1/2-R**	
– fitting the airfit comfort Series	G1/2	20	**CDM20-1/2-R**	
	G1/2	25	**CDM25-1/2-R**	
	G1/2	35	**CDM35-1/2-S**	
	G1/2	50	**CDM50-1/2-S**	

[1] Version with patented purge air regulation system on request

Adsorption Dryers

Description	Port Size	Nominal Flow at 7 bar and 35°C	**Type**	Data Sheet No.
Adsorption dryers	G1/2	10	**DA-10**	5.82.002
with/without process control	G1/2	25	**DA-25**	
	G1	35	**DA-35**	
	G1	65	**DA-65**	

Refrigeration Dryers

Description	Port Size	Nominal Flow at 7 bar and 35°C.	**Type**	Data Sheet No.
Refrigeration dryers	G3/8	10	**DC-10**	5.82.003
	G1/2	25	**DC-25**	
	G1/2	35	**DC-35**	
	G3/4	65	**DC-65**	
	G1	125	**DC-125**	
	G1 1/2	225	**DC-225**	
	G1 1/2	450	**DC-450**	
	G2	850	**DC-850**	

Application Ranges of the Various Types of airfit dry Dryers to DIN/ISO 7183

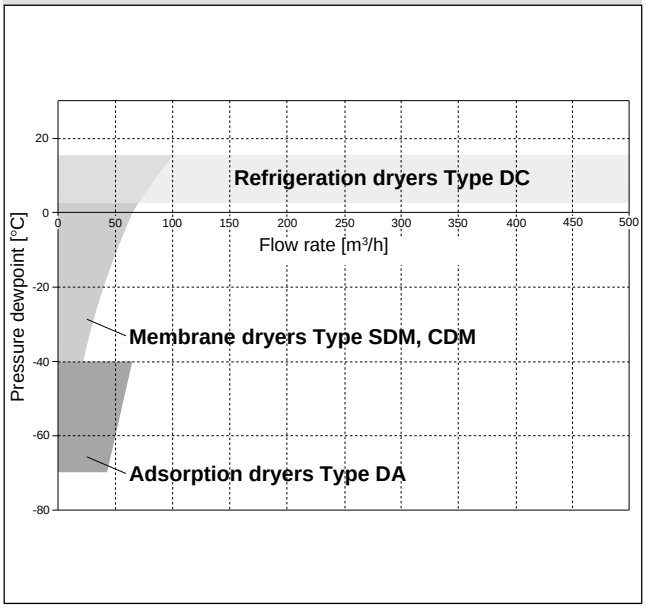

Rough Guide to Choice of Membrane Dryers

Conversion factor for calculation of corrected flow rate

Operating pressure range p [bar]	5	6	7	8	9	10	11	12	13	14	15	16
Conversion factor f_p	0.57	0.78	1.0	1.21	1.42	1.64	1.85	2.06	2.28	2.49	2.70	2.92

Formula symbols

$Q_{corr.}$ = Corrected inlet flow rate
Q_{inlet} = Inlet flow rate
f_p = Conversion factor

Formula for calculation of corrected inlet flow rate

$$Q_{corr.} = \frac{Q_{inlet}}{f_p}$$

Example of calculation:
Flow rate: 60 m³/h
Pressure dewpoint reduction: 20 K
Operating pressure: 10 bar

$$Q_{corr.} = \frac{Q_{inlet}}{f_p} = \frac{60}{1.64} = 36.59\ m^3/h$$

The calculated values shown on the Selection Diagram are a rough guide to the choice of membrane dryers. The exact choice should however be based on the specific data sheet.

Selection diagram for HOERBIGER-ORIGA membrane dryers – fitting the airfit swing and airfit comfort Series

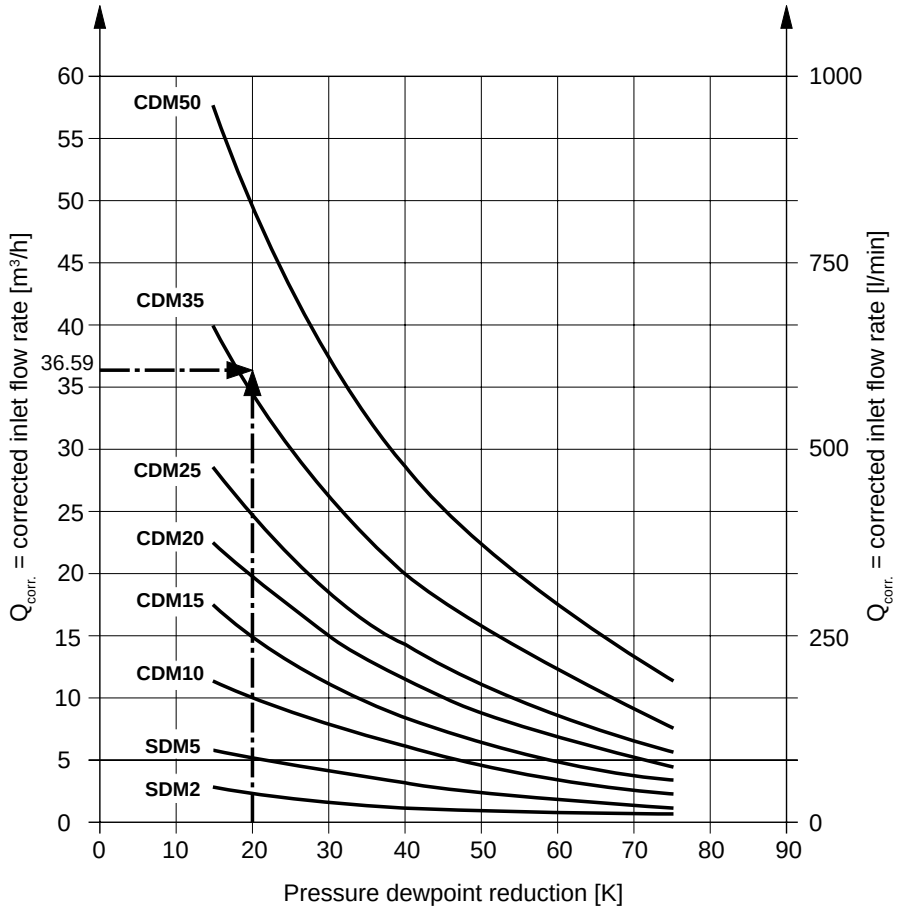

Based on the calculated flow rate the diagram shows that a CDM35 or CDM50 Type membrane dryer can be used.
The exact choice should however be based on the specific data sheet.

A3P159E00GY00X

The right to make technical modifications is reserved

Adsorption Dryer

G1/2–G2

airfit dry

DA...

Characteristics			Pressures quoted as gauge pressure			
System			Adsorbent filled cartridges in series, with cyclic flow. Fully integrated functional unit with pre- and post filters, fully automatic cold regenerating for continuous operation.			
System			as above, but microprocessor controlled (cycles depend on system load), Economiser (for optimal replacement of the pre- and post filters) LCD-display and selfdiagnostic system.			
Type (complete designation on next page)			**DA -10**	**DA -25**	**DA -35**	**DA -65**
Port size			G1/2		G1	
Q at 7 bar and 35°C input temperature in		m^3/h	10	25	35	65
Operating pressure range	p_{min} p_{max}	bar bar	4 16			
Residual oil content			0,03 mg/m³ at 7 bar, 35°C and 3 mg/m³ input concentration			
Pressure drop	Δp	bar	0,12-0,27 varying to type			
Pressure dew point		°C	-40 (to -70°C at 2/3 Q)			
Voltage			230 V/50-60 Hz (optional 110 V~, 24 V=)			
Weight		kg	9	26	40	60
Electrical protection		IP	65			
Medium temperatures	ϑ_{max}	°C	50			
Ambient temperatures	ϑ_{min} ϑ_{max}	°C °C	4 50			
Values are general selection values.						

Please consult us for optimal sizing of your unit.

- Also suitable for nitrogen
- airfit design
- Version with NPTF thread
- Self monitoring and self diagnostic system (pc)
- Load dependent adsorption and regeneration times (pc)
- LED function indicator
- <50 dB(A) in operation

HOERBIGER ORIGA

A1P612E00KY00X

The right to introduce technical modifications is reserved

Dimension Table (mm)

Dim.	Type DA-10	DA-25	DA-35	DA-65
B	300	300	531	531
C	136	136	245	245
D	12.5	12.5	12.5	12.5
E	92	92	156	156
F	115	115	195	195
G	15	15	35	35
H	580	1370	636	1140
I	112	112	191	191
T	97	97	160	160

Dimensions (mm)

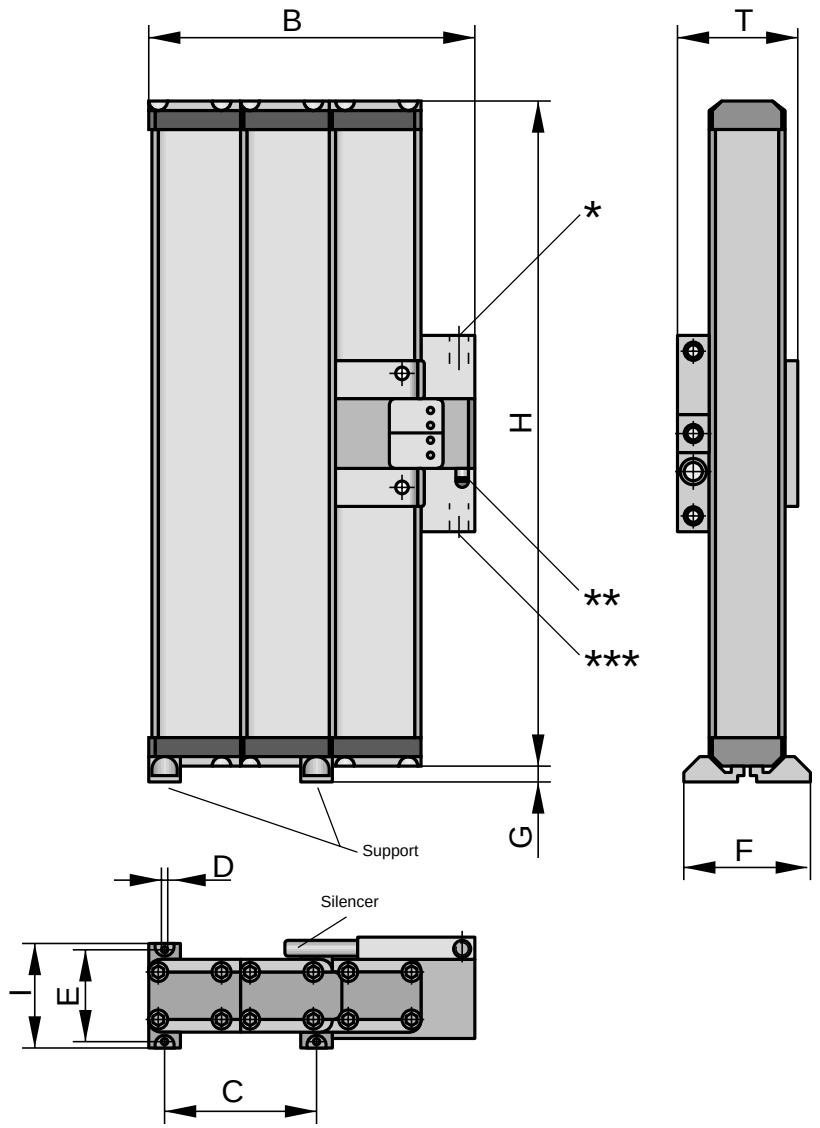

* Output
** Electrical connection
*** Input

Order Instructions

Description	Port size	Type	Order No.
Basic model	G1/2	**DA-10**	**PBZ 3049-000**
		DA-25	**PBZ 3649-000**
	G1	**DA-35**	**PBZ 3149-000**
		DA-65	**PBZ 3249-000**
with Microprocessor controlled	G1/2	**DA-10pc**	**PBZ 3049-001**
		DA-25pc	**PBZ 3649-001**
	G1	**DA-35pc**	**PBZ 3149-001**
		DA-65pc	**PBZ 3249-001**

Freeze Dryer

G3/8-G2

airfit dry

DC

Characteristics			Pressures quoted as gauge pressure							
System			The refrigerant is evaporated in a special heat exchange system and cools the air. The formed condensate is drained by an electronically controlled drain valve.							
Type (complete designation on next page)			**DC -10**	**DC -25**	**DC -35**	**DC -65**	**DC -125**	**DC -225**	**DC -450**	**DC -850**
Port size			G3/8	G1/2		G3/4	G1	G11/2		G2
Q at 7 bar and 35°C in input temperature [1]		m^3/h	10	25	35	65	125	225	450	850
Operating pressure range	p_{min} p_{max}	bar bar	2 16							
Allowable ambient temperature	ϑ_{min} ϑ_{max}	°C °C	2 50							
Electrical protection		IP	20							
Noise level		dB(A)	≤ 70							
Cooling air requirement		m^3/h	770						1300	2100
Power consumption *		kW	0.13	0.16	0.19	0.28	0.41	0.67	0.95	1.35
Electrical connection			230 V/50 Hz							
Weight		kg	30	36	39	48	52	66	97	166
Pressure drop	Δp	bar	0.1-0.3 varying to type							
Condensate drain		mm	For tubing ø DI 10							
Drucktaupunkt		°C	+3							
Refrigerant volume		kg	0.3-1.8 varying to type							
Allowable refrigerant pressure (low/high)		bar	16/30					16/20		

[1] m^3 at 1 bar absolute, 20°C (initial setting of the condenser) at an ambient temperature of +25°C, measured at the dryer output to DIN ISO 7183

* at 25°C ambient temperatures

- Airfit design
- Refrigerant R134a
- Up to 50% less energy due to air/air heat exchange system
- With electronic drain valve

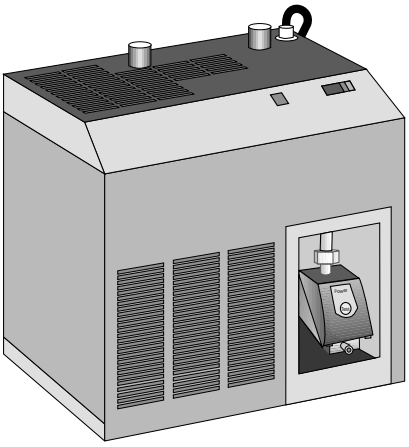

HOERBIGER ORIGA

A1P613E00EA00X

The right to introduce technical modifications is reserved

Dimensions

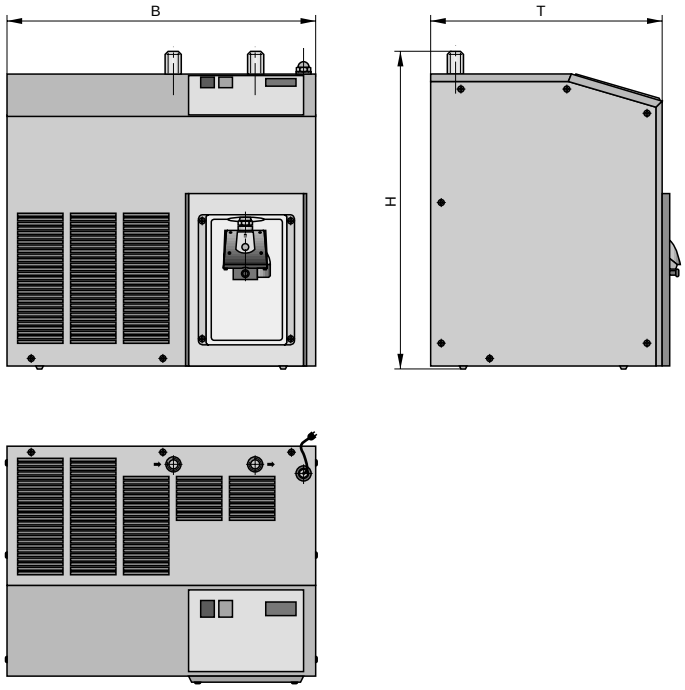

Dimension Table (mm)

Dimension	Type DC-10	DC-25	DC-35	DC-65	DC-125	DC-225	DC-450	DC-850
B	350	450	450	450	550	650	650	1200
H	350	450	450	450	600	600	600	900
T	375	400	400	400	450	600	600	800

Order Instructions

Description	Port size	**Type**	**Order No.**
Basic model	G3/8	**DC-10**	**PBZ 4749-000**
	G1/2	**DC-25**	**PBZ 4049-000**
		DC-35	**PBZ 4649-000**
	G3/4	**DC-65**	**PBZ 4149-000**
	G1	**DC-125**	**PBZ 4249-000**
	G11/2	**DC-225**	**PBZ 4349-000**
		DC-450	**PBZ 4449-000**
	G2	**DC-850**	**PBZ 4549-000**

Accessories

Description	**Order No.**
Bypass unit, completely assembled	**on request**
Mounting kit	**on request**

Membrane Dryers

G1/4

airfit dry

SDM-1/4

fitting the airfit swing Series

Versions:

- Version with return pipe (Type: SDM-1/4-R)

Characteristics			Pressures quoted as gauge pressure	
System			Drying by highly selective, water-permeable membrane (hollow fibres) based on partial pressure difference between inside and outside of membrane.	
Type			SDM2-1/4-R	SDM5-1/4-R
Port size			G 1/4	G 1/4
Installation			In any position	
Medium and ambient temperature range	ϑ_{min} ϑ_{max}	°C °C	+2 +60	
Medium			Filtered air [3]	
Weight (mass)		kg	1.7	2.0
Pneumatic Characteristics				
Operating pressure range	p_{min} p_{max}	bar bar	5 16	
Flow rate at compressed air inlet [1]	Q_{inlet}	l/min m³/h	**42** **2.5**	**83** **5**
Max. flow rate at compressed air inlet [2]	Q_{inlet}	l/min m³/h	140 8.4	280 16.8
Pressure dewpoint reduction [1]		K	20	
Purge air consumption		%	ca. 10	
Pressure drop	Δp	bar	0.01 – 0.04	

For optimum product selection please contact our sales engineer.

[1] Inlet conditions according to DIN ISO 7183: $p_1 = 7$ bar, $T_1 = 35°C$, $PDP_1 = 35°C$.
[2] See also the flow rate diagrams on the next page.
[3] According to ISO 8573-1, quality classes 1-1, see assembly instruction below.

Assembly Instruction

Recommended assembly order

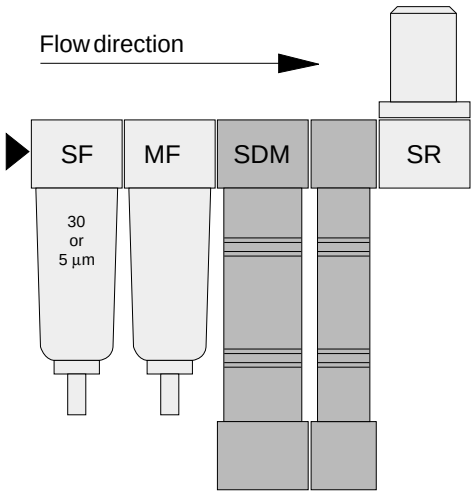

- airfit design
- Compact
- Variant with NPTF thread
- Immediate dry air delivery
- No electric power supply required
- Low purge air consumption
- Low pressure drop
- No change in air composition

HOERBIGER ORIGA

A1P667E00CAA00X

The right to make technical modifications is reserved

Flow rate in relation to pressure dewpoint reduction and inlet pressure

Type SDM2-1/4-R

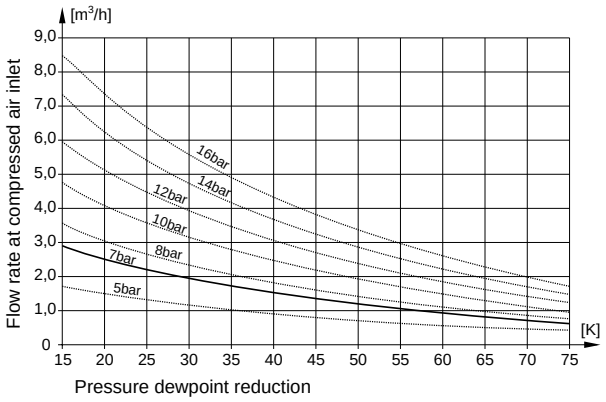

Flow rate in relation to pressure dewpoint reduction and inlet pressure

Type SDM5-1/4-R

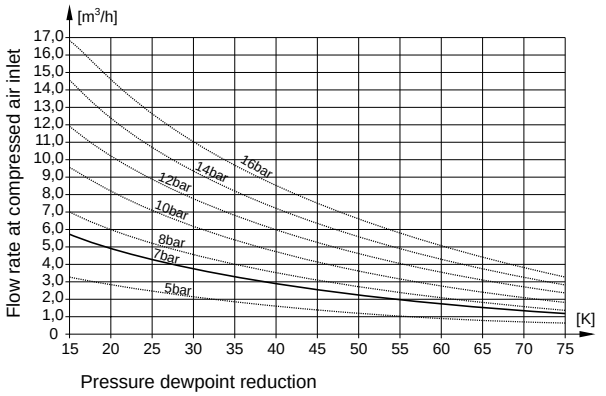

Dimension Table (mm)

Type	A	B	H
SDM2-1/4-R	280	80	325
SDM5-1/4-R	450	80	495

Dimensions (mm)

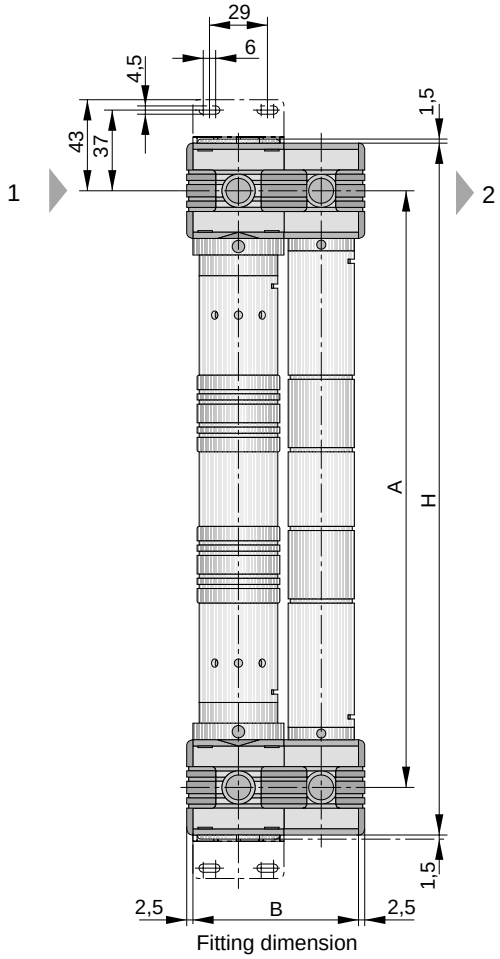

1 = P-inlet

2 = P-outlet (on version with return pipe)

Order Instructions

Description	Port Size	**Type**	**Order No.**
Membrane dryer with return pipe	G1/4	**SDM2-1/4-R**	**PB 44149-030**
	G1/4	**SDM5-1/4-R**	**PB 44149-020**

Accessories

Description	**Order No.**
Mounting kit (2 kits per mounting recommended)	**PL 16965**
Coupling kit	**PL 16959**

Membrane Dryers

G1/2

airfit dry

CDM-1/2

fitting the airfit comfort series

Versions:

- Version with return pipe (Type: CDM-1/2-R)
- Version with purge air regulation system (patented) on request

Characteristics			Pressures quoted as gauge pressure					
System			Drying by highly selective, water-permeable membrane (hollow fibres) based on partial pressure difference between inside and outside of membrane.					
Type			CDM 10-1/2-R	CDM 15-1/2-R	CDM 20-1/2-R	CDM 25-1/2-R	CDM 35-1/2-S	CDM 50-1/2-S
Port size			G 1/2					
Installation			In any position					
Medium and ambient temperature range	ϑ_{min} ϑ_{max}	°C °C	+2 +60					
Medium			Filtered air [3]					
Weight (mass)		kg	3.3				4.2	
Pneumatic Characteristics								
Operating pressure range	p_{min} p_{max}	bar bar	5 16					
Flow rate at compressed air inlet [1]	Q_{Inlet}	l/min m³/h	**166** **10**	**250** **15**	**333** **20**	**416** **25**	**583** **35**	**833** **50**
Max. flow rate at compressed air inlet [2]	Q_{Inlet}	l/min m³/h	560 33.6	840 50.4	1120 67.2	1400 84.0	1960 117.5	2800 168
Pressure dewpoint reduction [1]		K	20					
Purge air consumption		%	ca. 10					
Pressure drop	Δp	bar	0.02 - 0.05				0.06	0.12

For optimum product selection please contact our sales engineer.

[1] Inlet conditions according to DIN ISO 7183: $p_1 = 7$ bar, $T_1 = 35°C$, $PDP_1 = 35°C$.
[2] See also the flow rate diagrams on the next page.
[3] According to ISO 8573-1, quality classes 1-1, see assembly instruction below.

A1P668E00CAA00X

Assembly Instruction

Recommended assembly order

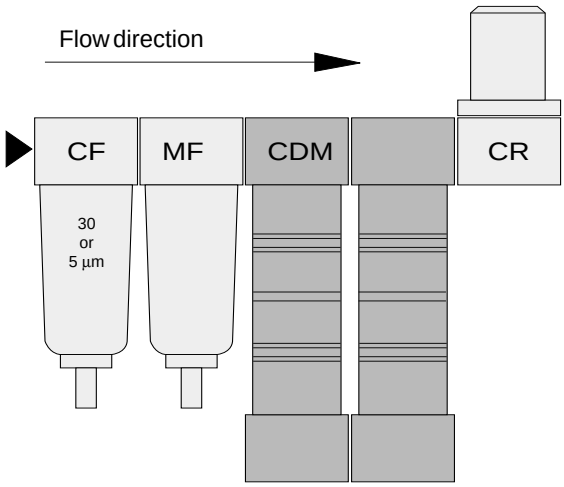

- airfit design
- Compact
- Variant with NPTF thread
- Immediate dry air delivery
- No electric power supply required
- Low purge air consumption
- Low pressure drop
- No change in air composition

The right to make technical modifications is reserved

HOERBIGER ORIGA

Flow rate in relation to pressure dewpoint reduction and inlet pressure

Type CDM10-1/2-R

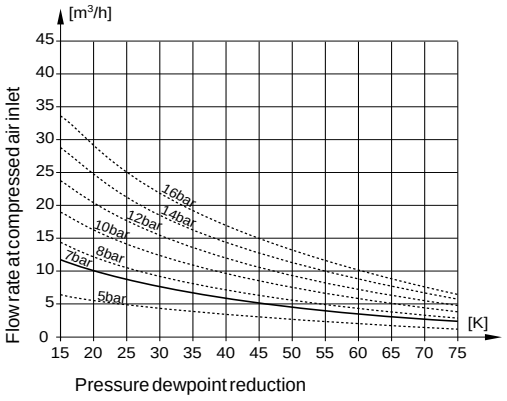

Flow rate in relation to pressure dewpoint reduction and inlet pressure

Type CDM15-1/2-R

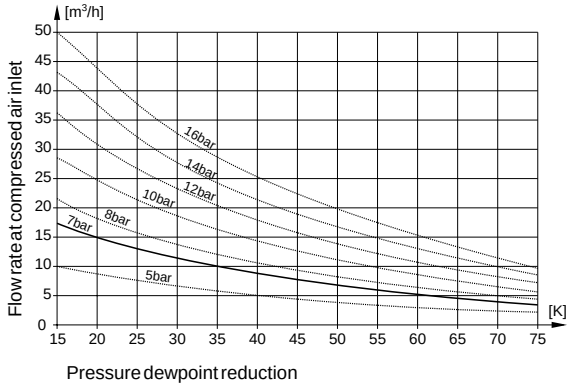

Flow rate in relation to pressure dewpoint reduction and inlet pressure

Type CDM20-1/2-R

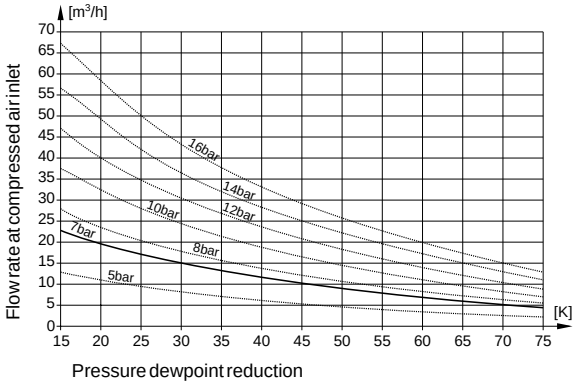

Flow rate in relation to pressure dewpoint reduction and inlet pressure

Type CDM25-1/2-R

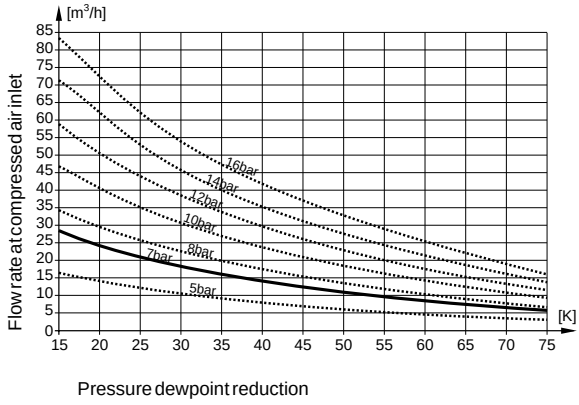

Flow rate in relation to pressure dewpoint reduction and inlet pressure

Type CDM35-1/2-S

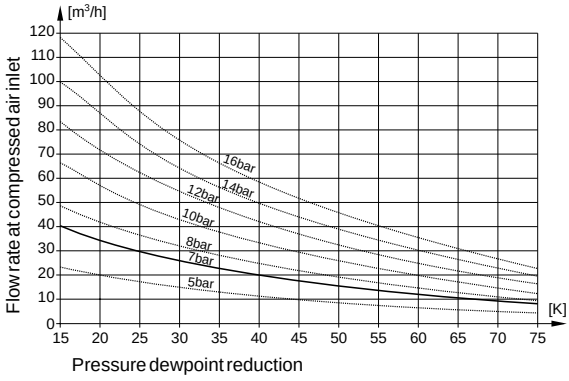

Flow rate in relation to pressure dewpoint reduction and inlet pressure

Type CDM50-1/2-S

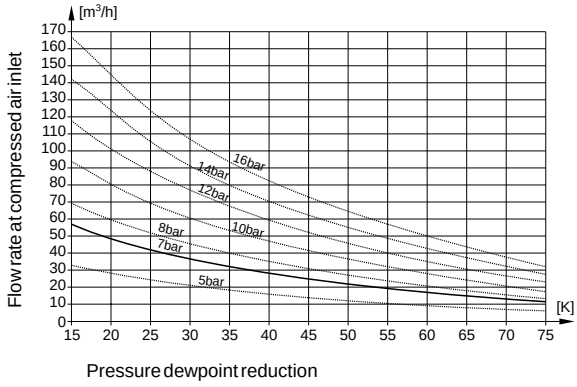

Dimensions (mm)
Type CDM 10/15/20/25-R

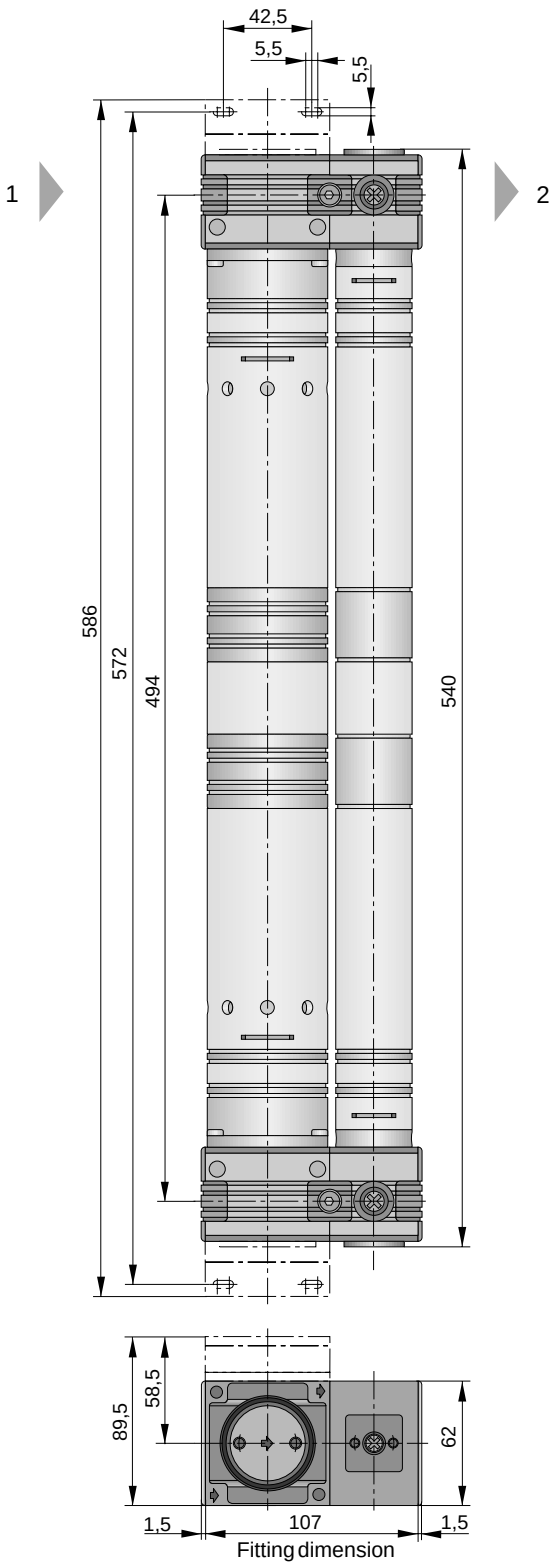

1 = P-inlet

2 = P-outlet (on version with return pipe)

Dimensions (mm)
Type CDM 35/50-S

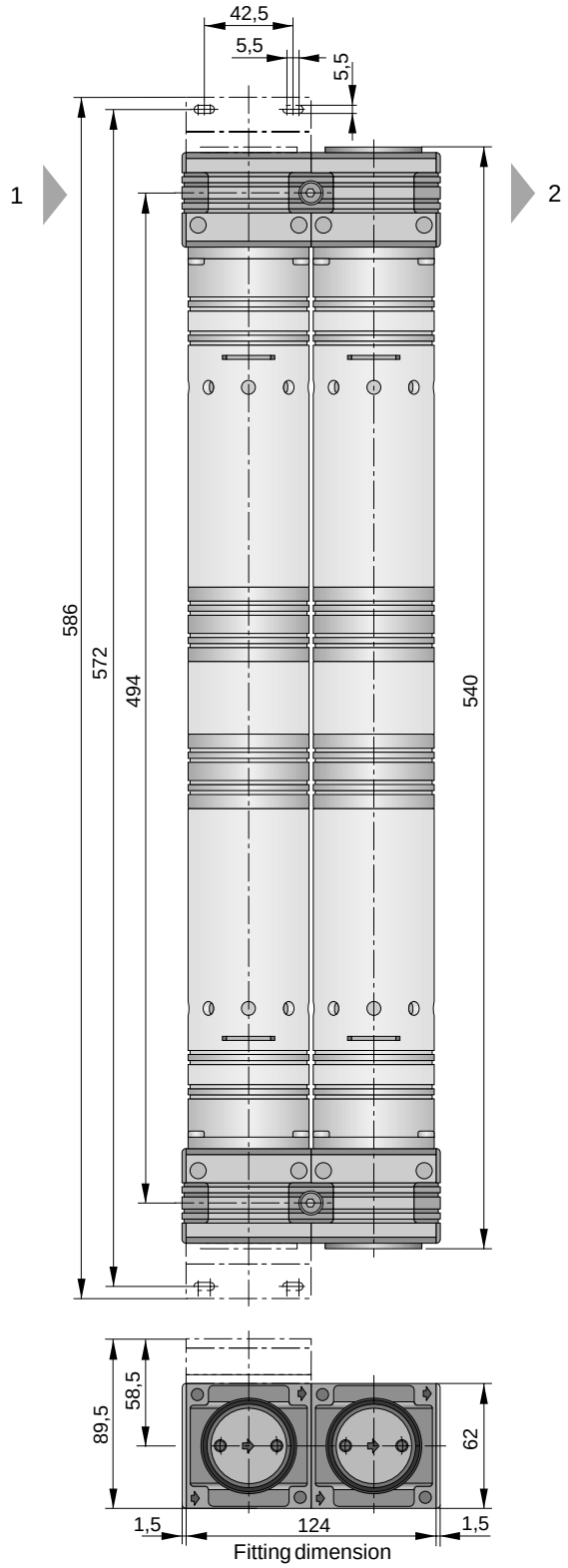

1 = P-inlet

2 = P-outlet

Order Instructions *)			
Description	Port Size	**Type**	**Order No.**
Membrane dryer with return pipe	G1/2	**CDM35-1/2-S**	**PB 54349-030**
	G1/2	**CDM50-1/2-S**	**PB 54349-033**
	G1/2	**CDM10-1/2-R**	**PB 54349-020**
	G1/2	**CDM15-1/2-R**	**PB 54349-021**
	G1/2	**CDM20-1/2-R**	**PB 54349-022**
	G1/2	**CDM25-1/2-R**	**PB 54349-023**

***) Version with patented purge air regulation system on request**

Accessories	
Description	**Order No.**
Mounting kit (2 kits per mounting recommended)	**PL 17518**
Coupling kit	**PL 17608**

Exhaust Filter Silencer

G1/4-G2

Residual oil: 0.01 mg/m³

airfit micro

AF-..

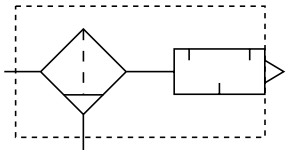

Characteristics			Pressures quoted as gauge pressure						
System			3-stage coalescence filter						
Type			**AF-08**	**AF-10**	**AF-15**	**AF-20**	**AF-25**	**AF-32**	**AF-50**
Port size			**G1/4**	**G3/8**	**G1/2**	**G3/4**	**G1**	**G11/4**	**G2**
Installation			Vertical, bowl at the bottom						
Medium and ambient temperatures	ϑ_{min} ϑ_{max}	°C °C	+1.5 +60						
Condensate drainage			Manual						
Weight (mass)		kg	0.3	0.3	0.6	0.6	1.1	1.1	1.17
Pneumatic Characteristic									
Operating pressure range	p_{min} p_{max}	bar bar	0 10						
Pressure drop	Δp	bar	See diagram						
Degree of filtration	η	%	99.999 D.O.P. solid particles and vapours (oil, water) >0.1 micron						
Residual oil content		mg/m³	0.01						
Silencing compared with open exhaust		dB	20	20	20	25	35	35	35
Exhaust capacity		l/s	See diagram						

Exhaust filter-silencers clean the exhaust air of pneumatic equipment and reduce the exhaust noise created by sudden expansion.

- Very high oil filtration
- High exhaust capacity
- Low pressure drop
- Very good silencing

Accessories

Mounting kit

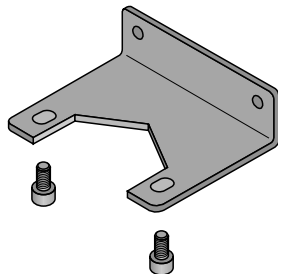

Order No.:
KX 9132 (G1/2, G3/4)
KX 9133 (G1, G2)

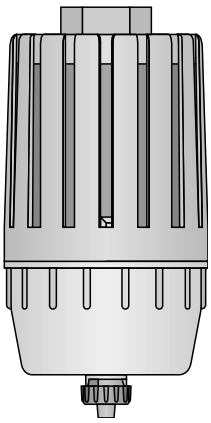

Pressure Drop

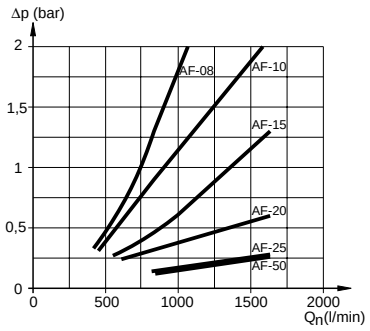

Exhaust Capacity

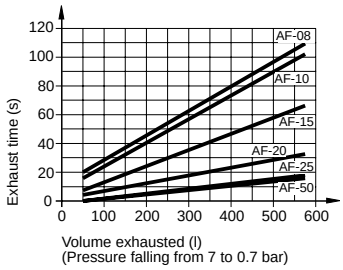

For product group list see 5.80.001E

Data Sheet No. 5.89.002E-1

A1P171E00KY00X

The right to introduce technical modifications is reserved

HOERBIGER ORIGA

Dimensions (mm)

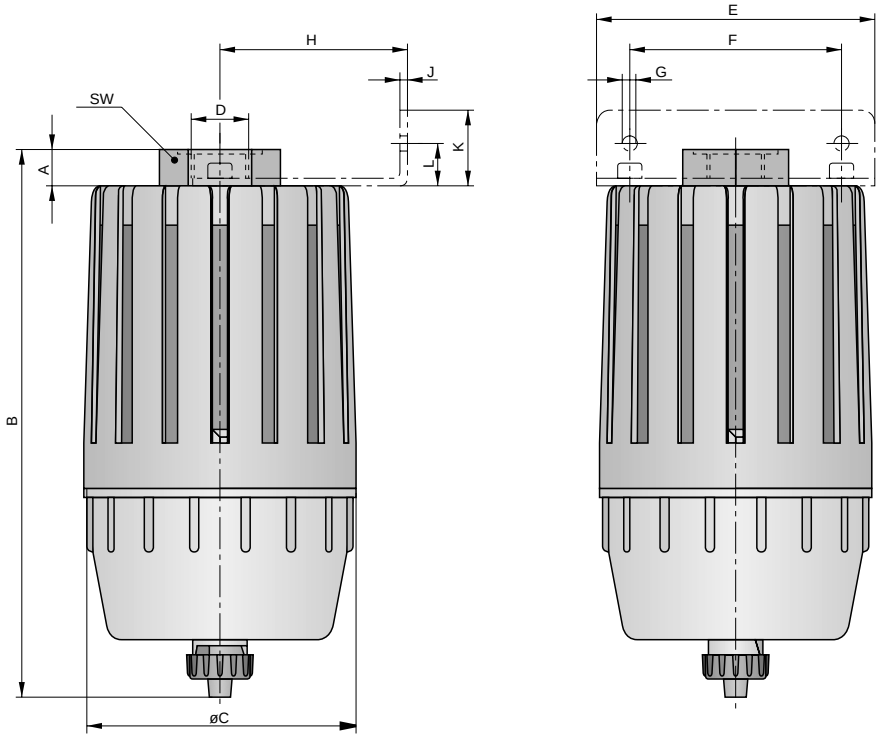

Dimension Table (mm)

Type	A	B	C	D	E	F	G	H	J	K	L	SW
AF-08	6	130	77	G1/4	64	45	5.8	50	2.5	11	3	26
AF-10	6	130	77	G3/8	64	45	5.8	50	2.5	11	3	26
AF-15	12	180	90	G1/2	81	56.5	5.5	52	1.5	25	13	41
AF-20	12	180	90	G3/4	81	56.5	5.5	52	1.5	25	13	41
AF-25	15	254	110	G1	93	70	5.5	62	1.5	25	13	50
AF-32	30	270	110	G11/4	93	70	5.5	62	1.5	25	13	55
AF-50	73	311	110	G2	93	70	5.5	62	1.5	25	13	55

Order Instructions

Description	Port size	**Type**	**Order No.**
Exhaust filter-silencer	G1/4	**AF-08**	**PB 35149-000**
	G3/8	**AF-10**	**PB 35249-000**
	G1/2	**AF-15**	**PB 35349-000**
	G3/4	**AF-20**	**PB 35449-000**
	G1	**AF-25**	**PB 35549-000**
	G11/4	**AF-32**	**PB 36949-000**
	G2	**AF-50**	**PB 35049-000**

Accessories

Mounting kit (bracket and screws)		**AF-08/10**	**Integral component**
		AF-15/20	**KX 9132**
		AF-25/32/50	**KY 9133**

PNEUMATIC
GROUP

INJECTION LUBRICATOR SYSTEMS SERIES

oilfit

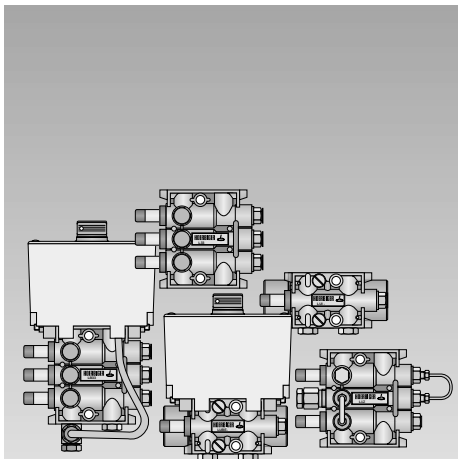

HOERBIGER
ORIGA

		Port size	Recommended flow (l/min)*	**Type**	Data Sheet No.
Injection lubricador combination units	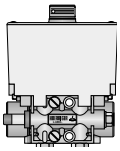	G1/4	550	**LUBI-08**	5.90.002E
		G3/8	850	**LUBI-10**	
		G1/2	1900	**LUBI-15**	
		G3/4	3500	**LUBI-20**	
		G1	5000	**LUBI-25**	
	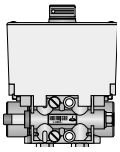	G1/4	550	**LUBE-08**	5.90.003E
		G3/8	850	**LUBE-10**	
		G1/2	1900	**LUBE-15**	
		G3/4	3500	**LUBE-20**	
		G1	5000	**LUBE-25**	
	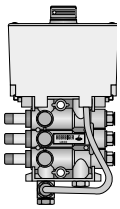	G1/8*	-	**LB11**	5.90.004E
		G1/8*	-	**LB31**	
		G1/8*	-	**LB33**	
	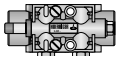	G1/4	550	**LUI-08**	5.90.008E
		G3/8	850	**LUI-10**	
		G1/2	1900	**LUI-15**	
		G3/4	3500	**LUI-20**	
		G1	5000	**LUI-25**	
Single units		G1/8*	-	**L10i**	5.90.005E
		G1/8*	-	**L10e**	
	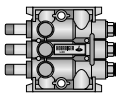	G1/8*	-	**L11**	5.90.006E
		G1/8*	-	**L31**	
		G1/8*	-	**L33**	

A1P027E00EA00X

The right to introduce technical modifications is reserved

Table of Contents see 5.00.001E

*Control signal inlet.

Oil recommendation: see 5.61.050E

Injection Lubricator Combination

G1/4-G1

oilfit

LUBI-..

Characteristics			Pressures quoted as gauge pressure				
System			Single point injection lubricator. Automatic oilfeed when connected pneumatic tool is switched on.				
Mounting			In-line mounting: 2 screws M6 are included in delivery				
Tube connection			Thread				
Port size			G1/4	G3/8	G1/2	G3/4	G1
Port size lubricant			Coupling for tube Ø 2.5/1.5 coaxially in airline				
Weight (mass)		kg	0.65	0.65	0.65	0.75	0.80
Installation			Horizontal, reservoir on top				
Control medium			Filtered compressed air				
Lubricant			Mineral oil to DIN51524 and DIN 51525				
Viscosity		mm^2/s	20-765				
Medium and ambient temperatures	ϑ_{min} ϑ_{max}	°C °C	-20 +50				
Material: Reservoir			Polyester resin (PETP)				
Material: Sensor housing			Diecast aluminium				
Material: Sensor flap			Acetal resin (POM)				
Operating pressure range control fluid	p_{min} p_{max}	bar bar	3 16				
Operating pressure range lubricant			Inlet: without pressure from fitted reservoir (gravity feed)				
			Outlet: 0-250 bar depending on operating pressure and oil injection conditions				
Recommended flow[1])	Q_n	l/min m^3/h	550 33	850 51	1900 114	3500 210	5000 300
Own air usage[2])	Q_n	m^3/h	0.36				
Minimum flow at 6 bar	Q_{min}	m^3/h	9				
Reservoir capacity		cm^3	250				
Oil feed per stroke		mm^3	3-30 adjustable factory adjustment 30 mm^3/stroke				
Optional extension kits			Up to max. 10 lubrication points by fitting of elements L11, L31 or L33				

[1]) at 6 bar and 25 m/s
[2]) at 6 bar and Ø 0.3 mm and $Q_n > Q_{min}$ (i.e. only when there is flow)

Comprising:
Oil reservoir
Air flow sensor
One-point injection lubricator

With combination units type LUBI-.., the pressure oil connection is inside the air outlet port of the air flow sensor.

For lubrication of individual hand operated pneumatic tools.

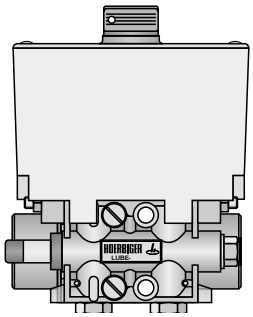

For product group list see 5.90.001E
For further lubrciators see 5.90.002E-5.90.008E
For accessories see 5.91.002E-5.91.008E

Data Sheet No. 5.90.002E-1

A1P149E00KY00X

The right to introduce technical modifications is reserved

HOERBIGER ORIGA

Flow Characteristics Type: LUBI-08

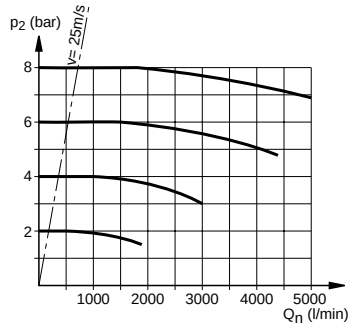

Flow Characteristics Type: LUBI-10

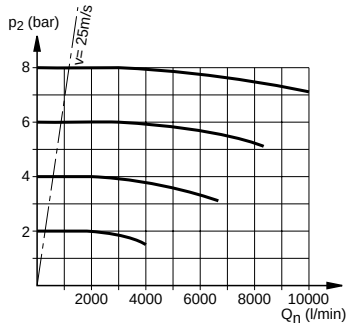

Flow Characteristics Type: LUBI-15, 20, 25

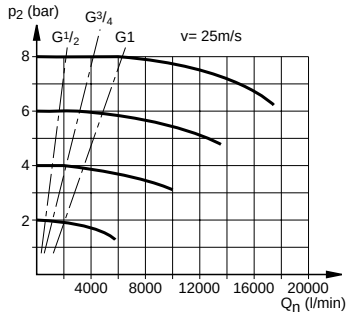

Minimum Flow

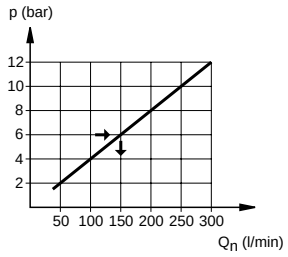

Dimensions (mm)

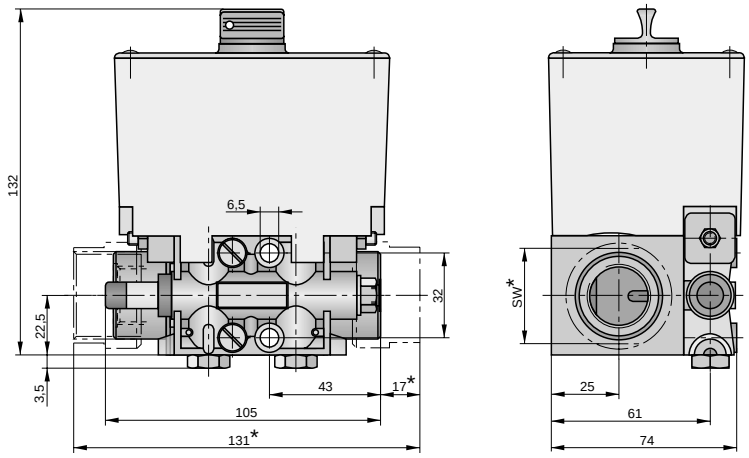

* only for LUBI-20 SW = 36
LUBI-25 SW = 41

Adjustment of Oil Feed

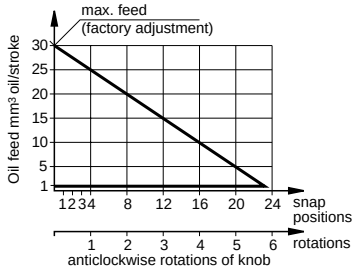

Order Instructions

Description	Port size	Type	Order No.
Injection lubricator combination	G1/4	**LUBI-08**	**PB 13449-005**
Injection lubricator combination	G3/8	**LUBI-10**	**PB 13549-005**
Injection lubricator combination	G1/2	**LUBI-15**	**PB 13649-005**
Injection lubricator combination	G3/4	**LUBI-20**	**PB 13749-005**
Injection lubricator combination	G1	**LUBI-25**	**PB13849-005**

Injection Lubricator Combination

G1/4-G1

oilfit

LUBE-..

Characteristics			Pressures quoted as gauge pressure				
System			Single point injection lubricator. Automatic oilfeed when connected pneumatic tool is switched on.				
Mounting			In-line mounting: 2 screws M6 are included in delivery				
Tube connection			Thread				
Port size			G1/4	G3/8	G1/2	G3/4	G1
Port size lubricant			M6 x 0.75				
Weight (mass)		kg	0.65	0.65	0.65	0.75	0.80
Installation			Horizontal, reservoir on top				
Control medium			Filtered compressed air				
Lubricant			Mineral oil to DIN51524 and DIN 51525				
Viscosity		mm^2/s	20-765				
Medium and ambient temperatures	ϑ_{min} ϑ_{max}	°C °C	-20 +50				
Material: Reservoir			Polyester resin (PETP)				
Material: Sensor housing			Diecast aluminium				
Material: Sensor flap			Acetal resin (POM)				
Operating pressure range control fluid	p_{min} p_{max}	bar bar	3 16				
Operating pressure range lubricant			Inlet: without pressure form fitted reservoir (gravity feed)				
			Outlet: 0-250 bar depending on operating pressure and oil injection conditions				
Recommended flow[1])	Q_n	l/min m^3/h	550 33	850 51	1900 114	3500 210	5000 300
Own air usage[2])	Q_n	m^3/h	0.36				
Minimum flow at 6 bar	Q_{min}	m^3/h	9				
Reservoir capacity		cm^3	250				
Oil feed per stroke		mm^3	3-30 adjustable factory adjustment 30 mm^3/stroke				
Optional extension kits			Up to max. 10 lubrication points by fitting of elements L11, L31 or L33				

[1]) at 6 bar and 25 m/s
[2]) at6 bar and Ø 0.3 mm and $Q_n > Q_{min}$ (i.e. only when there is flow)

Comprising:
Oil reservoir
Air flow sensor
One-point injection lubricator

With combination units type LUBE.., the pressure oil connection is outside of the flow sensor, directly on the outlet of lubricator element.

For lubrication of individual hand operated pneumatic tools.

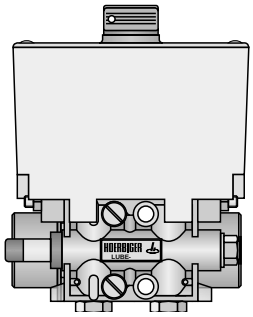

For product group list see 5.90.001E
For further lubricators see 5.90.002E-5.90.008E
For accessories see 5.91.002E-5.91.008E

Data Sheet No. 5.90.003E-1

A1P150E00KY00X

The right to introduce technical modifications is reserved

Flow Characteristics Type: LUBE-08

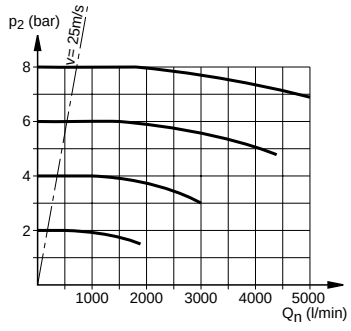

Flow Characteristics Type: LUBE-10

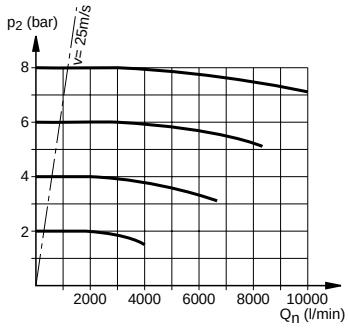

Flow Characteristics Type: LUBE-15, 20, 25

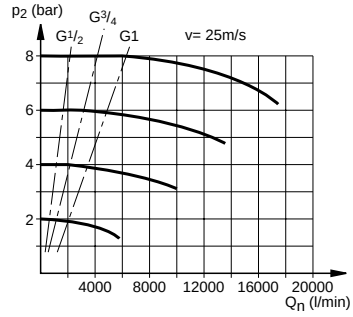

Minimum Flow

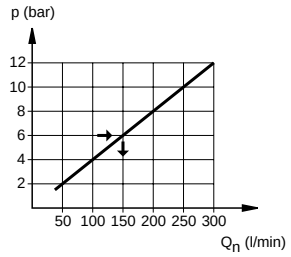

Dimensions (mm)

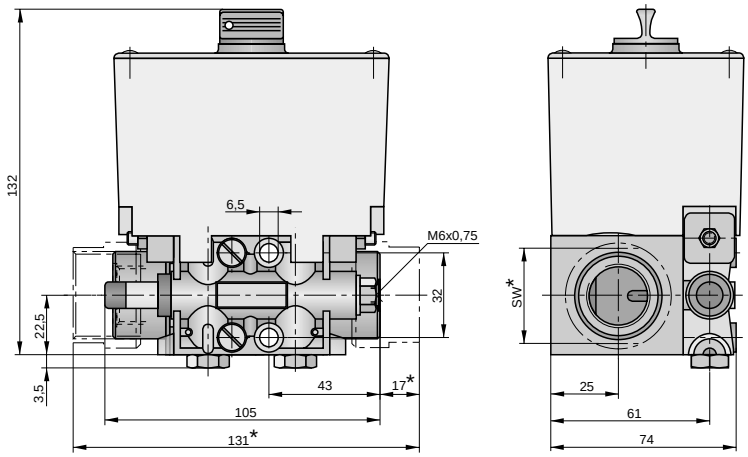

* only for LUBE-20 SW = 36
LUBE-25 SW = 41

Adjustment of Oil Feed

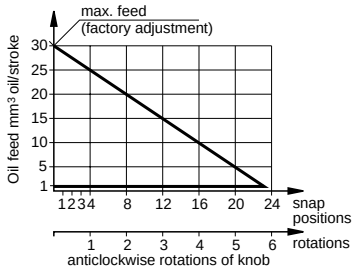

Order Instructions

Description	Port size	Type	Order No.
Injection lubricator combination	G1/4	**LUBE-08**	**PB 13449-007**
Injection lubricator combination	G3/8	**LUBE-10**	**PB 13549-007**
Injection lubricator combination	G1/2	**LUBE-15**	**PB 13649-007**
Injection lubricator combination	G3/4	**LUBE-20**	**PB 13749-007**
Injection lubricator combination	G1	**LUBE-25**	**PB13849-007**

Injection Lubricator Combination

oilfit

LB11
LB31
LB33

Characteristics				Pressures quoted as gauge pressure	
System	LB11			One-point lubricator with 1 control air inlet	Oil feed actuated by external pneumatic signal
	LB31			Three-point injection lubricator with 1 combined control air inlet (combined actuation)	
	LB33			Three-point injection lubricator with 3 separate control air inlets (individual actuation)	
Mounting				2 screws M6 (are included in delivery)	
Installation				Horizontal, reservoir on top	
Port size				G 1/8 control signal inlet M6x0.75 lubricant outlet	
Weight (mass)			kg	LB11: 0.45; LB31, LB33: 0.65	
Control medium				Filtered compressed air	
Lubricant				Mineral oil to DIN51524 and DIN 51525	
Viscosity			mm^2/s	20-765	
Medium and ambient temperatures		ϑ_{min} ϑ_{max}	°C °C	-20 +50	
Material	Reservoir			Polyester resin (PETP)	
	Element housing			Diecast zinc	
Operating pressure range control fluid		p_{min} p_{max}	bar bar	3 16	
Operating pressure range lubricant				Inlet: without pressure form fitted reservoir (gravity feed)	
				Outlet: 0-250 bar depending on operating pressure and oil injection conditions	
Reservoir capacity			cm^3	250	
Oil feed per stroke			mm^3	3-30 adjustable factory adjustment 30 mm^3/stroke	
Optional extension kits				Up to max. 10 lubrication points by fitting of elements L11, L31 or L33	

Comprising:
Oil reservoir
Lubricator element

These combinations are used for lubricating pneumatic cylinders, cycle-operating pneumatic feeding devices and pneumatic tools.

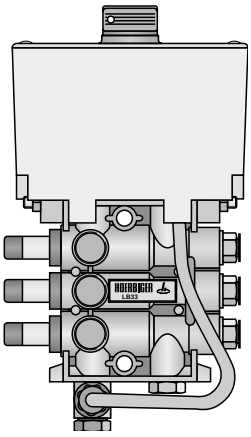

Adjustment of Oil Feed

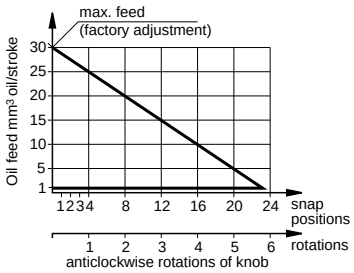

For product group list see 5.90.001E
For data sheets see 5.90.002E-5.90.008E
For accessories see 5.91.002E-5.91.008E

A1P151E00KY00X

The right to introduce technical modifications is reserved

HOERBIGER ORIGA

Dimensions (mm)
Type: LB11

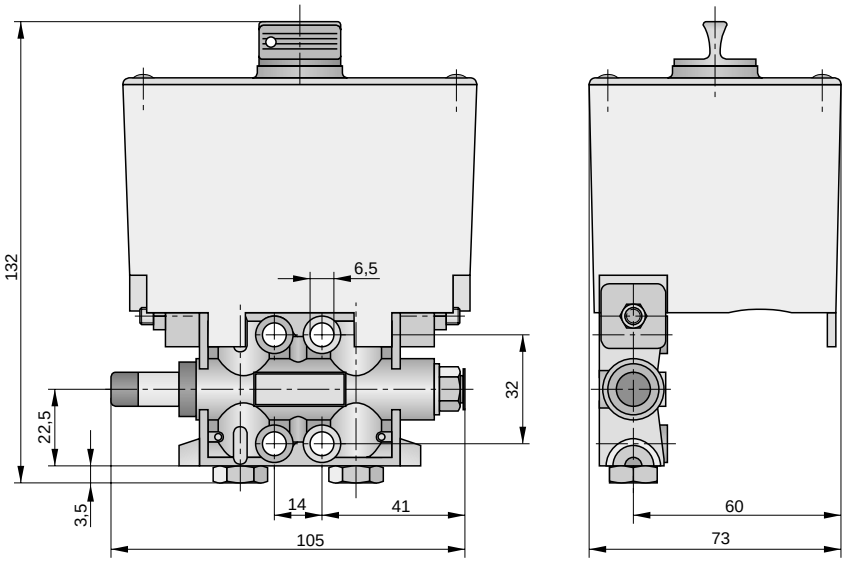

Dimensions (mm)
Type: LB31, LB33

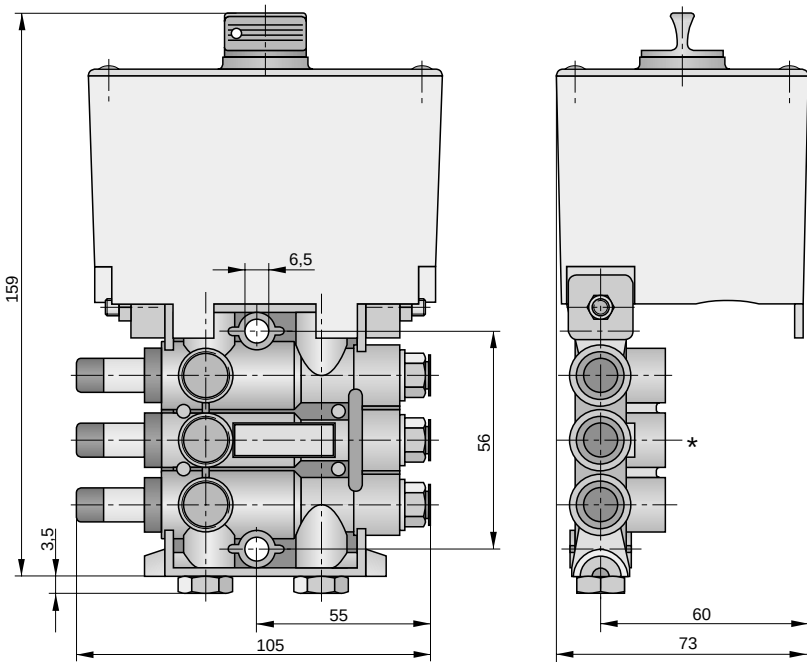

* 3 lateral connections G1/8 only with type LB33

Order Instructions

Description	Type	Order No.
One-point injection lubricator combination with air connection on the bottom side	**LB11**	**PB 13049-000**
Three-pint injection lubricator combination with air connection on the bottom side (air signal actuates all 3 pressure oil outlets sumultaneously)	**LB31**	**PB 13149-000**
Three-point injection lubricator combination with 3 lateral air connections (each air signal actuates only its corresponding pressure oil outlet)	**LB33**	**PB 13249-000**

Injection Lubricator Combination

oilfit

L10i
L10e

Characteristics			Pressures quoted as gauge pressure
System			Single acting air hydraulic pump
Mounting			2 screws M6, with coupling kit either directly on oil reservoir or on other lubricator elements
Tube connection			Thread
Port size control air			G1/8
Port size lubricant			Inlet: G 1/8 Outlet: M6 x 0.75 (L10e)
Weight (mass)		kg	0.25
Installation			Horizontal (oil channel S→S) see drawing
Control medium			Filtered compressed air
Lubricant			Mineral oil to DIN51524 and DIN 51525
Viscosity		mm^2/s	20-765
Medium and ambient temperatures	ϑ_{min} ϑ_{max}	°C °C	-20 +80
Material: Housing			Diecast zinc
Material: Seals			Buna N
Material: Actuating plunger			Polyamid transparent
Material: Oil connection			Brass
Operating pressure range of air	p_{min} p_{max}	bar bar	3 16
Operating pressure range of lubricant			Inlet: gravity feed or pressure feed (max. 3 bar)
			Outlet: 0-250 bar depending on operating pressure and oil injection conditions
Oil feed per stroke		mm^3	3-30 adjustable factory adjustment 30 mm^3/stroke

A1P152E00KY00X

Adjustment of Oil Feed

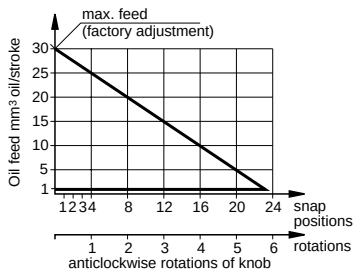

The lubricator elements have an unthreaded lateral air connection and can only be used for flanging to the air flow sensor.

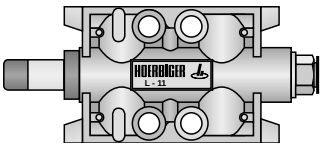

The right to introduce technical modifications is reserved

For product group list see 5.90.001E
For further lubricators see 5.90.002E-5.90.008E
For accessories see 5.91.002E-5.91.008E

HOERBIGER ORIGA

Dimensions (mm)

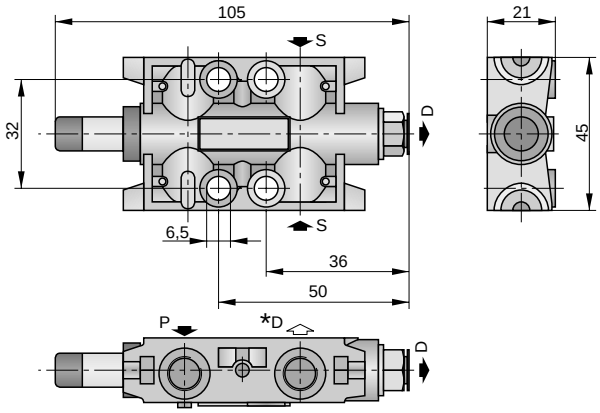

* only type L10e

Order Instructions

Description	Type	Order No.
Injection lubricator element with internal pressure oil outlet into the flow sensor	**L10i**	**KY 2030**
Injection lubricator element with external pressure (M6 x 0.75)	**L10e**	**KY 2031**

Accessories

Description	Type	Order No.
Coupling kit (in 9 parts)	**K**	**PL 08066**

Injection Lubricator Combination

oilfit

L11
L31
L33

Characteristics			Pressures quoted as gauge pressure
System			Single acting air hydraulic pump
Mounting			2 screws M6, with coupling kit either directly on oil reservoir or on other lubricator elements
Tube connection			Thread
Port size control air			G1/8
Port size lubricant			Inlet: G 1/8 Outlet: M6 x 0.75
Weight (mass)		kg	0.40
Installation			Horizontal (oil channel S→S) see drawing
Control medium			Filtered compressed air
Lubricant			Mineral oil to DIN51524 and DIN 51525
Viscosity		mm^2/s	20-765
Medium and ambient temperatures	ϑ_{min} ϑ_{max}	°C °C	-20 +80
Material: Housing			Diecast zinc
Material: Seals			Buna N
Material: Actuating plunger			Polyamid transparent
Material: Oil connection			Brass
Operating pressure range of air	p_{min} p_{max}	bar bar	3 16
Operating pressure range of lubricant			Inlet: gravity fee or pressure feed (max. 3 bar)
			Outlet: 0-250 bar depending on operating pressure and oil injection conditions
Oil feed per stroke		mm^3	3-30 adjustable factory adjustment 30 mm^3/stroke

Adjustment of Oil Feed

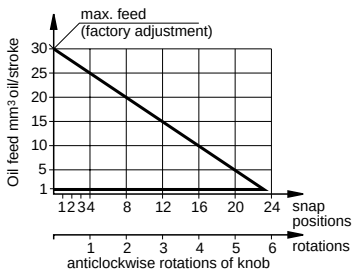

Lubricator elements for flanging to the reservoir or for extending a lubricator combination (with or without reservoir)

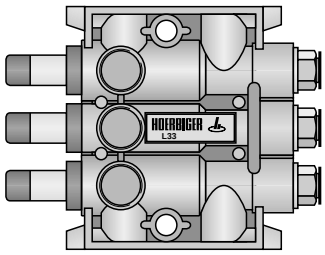

For product group list see 5.90.001E
For further lubricators see 5.90.002E-5.90.008E
For accessories see 5.91.002E-5.91.008E

Data Sheet No. 5.90.006E-1

HOERBIGER ORIGA

A1P153E00KY00X

The right to introduce technical modifications is reserved

Dimensions (mm)
Type: L11

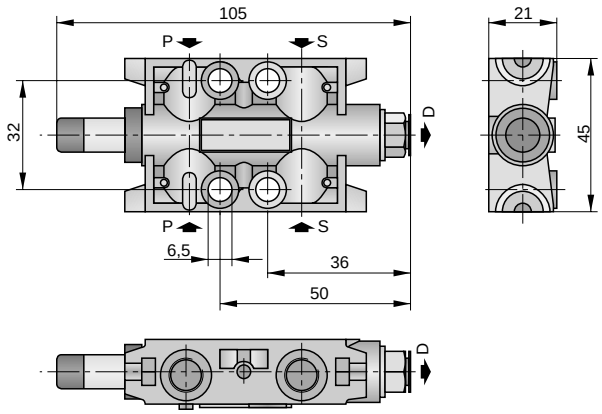

Dimensions (mm)
Type: L31, L33

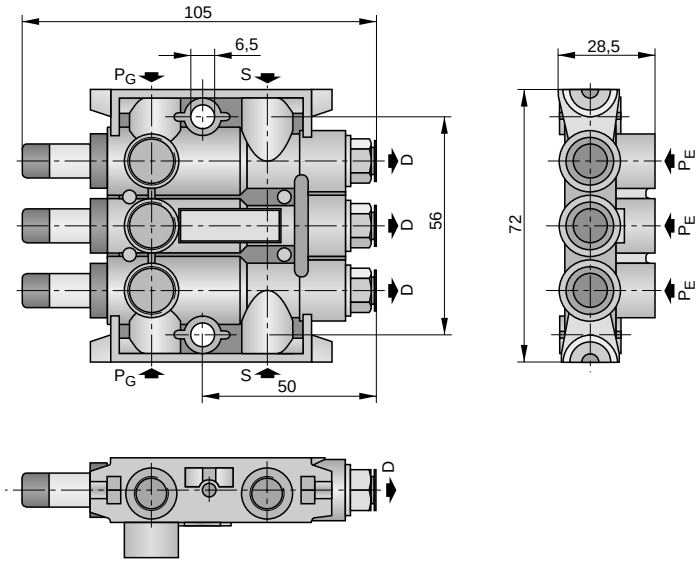

Order Instructions

Description	Type	Order No.
One-point injection lubricator element with air connection on top and bottom side	**L11**	**KY 2033**
Three-point injection lubricator element with air connection on top and bottom side for combined actuation (air signal simultaneously actuates all 3 pressure oil outlets)	**L31**	**KY 2032**
Three-point lubricator element with 3 lateral air connections (each air signal actuates only its corresponding pressure oil outlet)	**L33**	**KY 2034**

Injection Lubricator Combination

G1/4-G1

oilfit

LUI-..

Characteristics			Pressures quoted as gauge pressure				
System			Single point injection lubricator. Automatic oilfeed when connected pneumatic tool is switched on.				
Mounting			In-line mounting: 2 screws M6 are included in delivery				
Tube connection			Thread				
Port size			G1/4	G3/8	G1/2	G3/4	G1
Port size lubricant			Coupling for tube Ø 2.5/1.5 coaxially in airline				
Weight (mass)		kg	0.45	0.45	0.45	0.50	0.55
Installation			Flow direction of air flow sensor: horizontal				
Control medium			Filtered compressed air				
Lubricant			Mineral oil to DIN51524 and DIN 51525				
Viscosity		mm^2/s	20-765				
Medium and ambient temperatures	ϑ_{min} ϑ_{max}	°C °C	-20 +50				
Material: Injection lubricator			Diecast aluminium				
Material: Sensor housing			Diecast aluminium				
Material: Sensor flap			Acetal resin (POM)				
Operating pressure range control fluid	p_{min} p_{max}	bar bar	3 16				
Operating pressure range lubricant			Inlet: without pressure from fitted reservoir (gravity feed)				
			Outlet: 0-250 bar depending on operating pressure and oil injection conditions				
Recommended flow[1])	Q_n	l/min m^3/h	550 33	850 51	1900 114	3500 210	5000 300
Own air usage[2])	Q_n	m^3/h	0.36				
Minimum flow at 6 bar	Q_{min}	m^3/h	9				
Reservoir capacity		cm^3	250				
Oil feed per stroke		mm^3	3-30 adjustable factory adjustment 30 mm^3/stroke				
Optional extension kits			Up to max. 10 lubrication points by fitting of elements L11, L31 or L33				

[1]) at 6 bar and 25 m/s
[2]) at6 bar and Ø 0.3 mm and $Q_n > Q_{min}$ (i.e. only when there is flow)

Comprising:
Air flow sensor (U-..)
One-point injection lubricator (L10i)

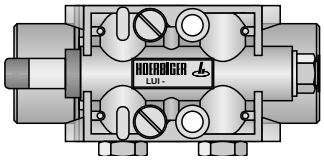

A1P349E00KY00X

The right to introduce technical modifications is reserved

For product group list see 5.90.001E
For data sheets see 5.90.002E-5.90.008E
For accessories see 5.91.002E-5.91.008E

HOERBIGER ORIGA

Flow Characteristics Type: LUI-08

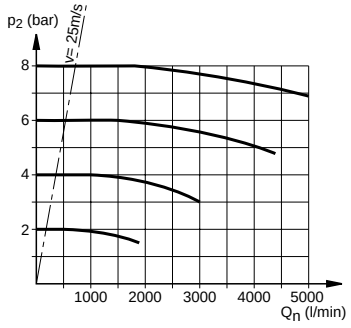

Flow Characteristics Type: LUI-10

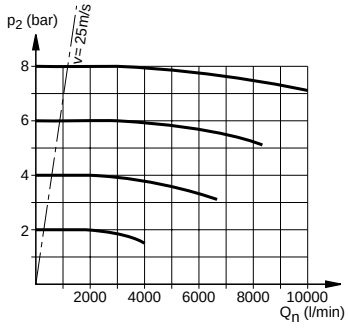

Flow Characteristics Type: LUI-15, 20, 25

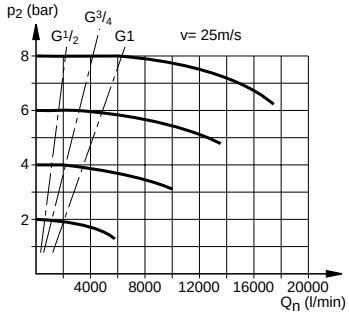

Minimum Flow

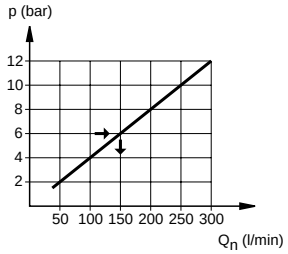

Dimensions (mm)

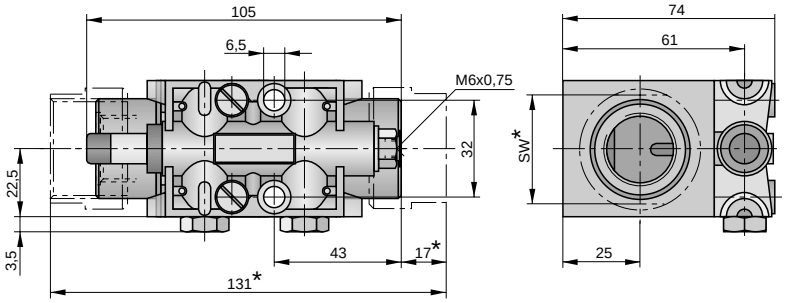

* only for LUI-20 SW = 36
LUI-25 SW = 41

Adjustment of Oil Feed

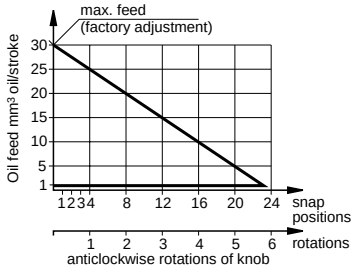

Order Instructions

Description	Port size	Type	Order No.
Injection lubricator combination	G1/4	**LUI-08**	**PB 13449-001**
Injection lubricator combination	G3/8	**LUI-10**	**PB 13549-001**
Injection lubricator combination	G1/2	**LUI-15**	**PB 13649-001**
Injection lubricator combination	G3/4	**LUI-20**	**PB 13749-001**
Injection lubricator combination	G1	**LUI-25**	**PB 13849-001**

Air Flow Sensor

to Injection Lubricator Element Types L10i, L10e

oilfit **Accessories**

U-..

Characteristics			Pressures quoted as gauge pressure				
System			Flow sensor for converting air flow into a digital air signal				
Mounting			In-line mounting, to element L10 2 screws M6				
Tube connection			Thread				
Port size control fluid			G1/4	G3/8	G1/2	G3/4	G1
Port size lubricant			Tube nipple for tube Ø 2.5/1.5 coaxially in airline				
Weight (mass)		kg	0.20	0.20	0.20	0.25	0.30
Installation			Horizontal				
Control medium			Filtered compressed air				
Medium and ambient temperatures	ϑ_{min} ϑ_{max}	°C °C	-20 +80				
Material			Diecast aluminium Flap: acetal resin (POM)				
Operating pressure range	p_{min} p_{max}	bar bar	3 16				
Recommended flow[1])	Q_n	l/min m^3/h	550 33	850 51	1900 114	3500 210	5000 300
Own air usage[2])	Q_n	m^3/h	0.36				
Minimum flow at 6 bar	Q_{min}	m^3/h	9				

[1]) at 6 bar and 25 m/s
[2]) at 6 bar and Ø 0.3 mm and $Q_n > Q_{min}$ (i.e. only when there is flow)

Flow Characteristics Type: U-08

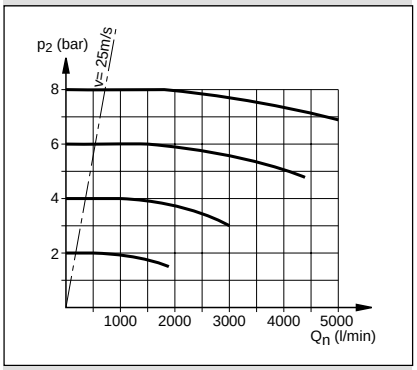

Flow Characteristics Type: U-10

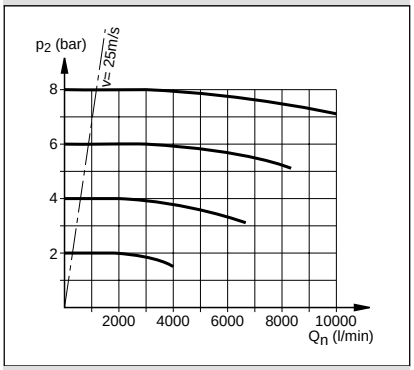

Flow Characteristics Type: U-15, 20, 25

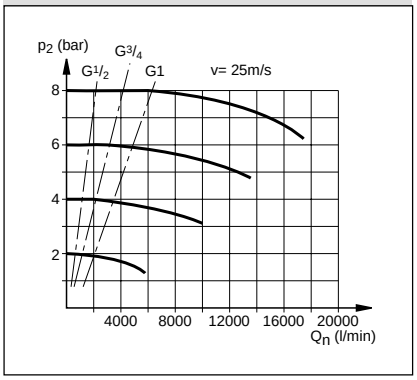

Minimum Flow

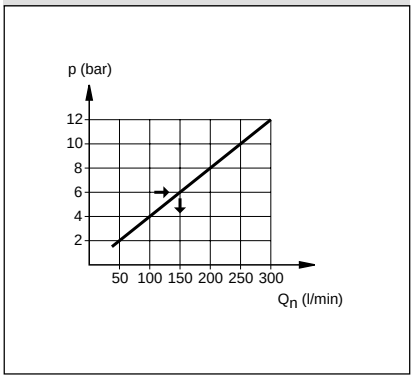

The airflow sensor converts air flow into a digital air signal.

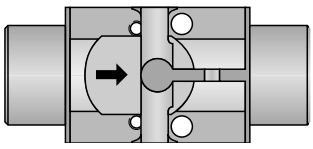

For product group list see 5.90.001E
For data sheets see 5.90.002E-5.90.008E
For accessories see 5.91.002E-5.91.008E

Data Sheet No. 5.91.002E-1

A1P154E00KY00X

The right to introduce technical modifications is reserved

Dimensions (mm)

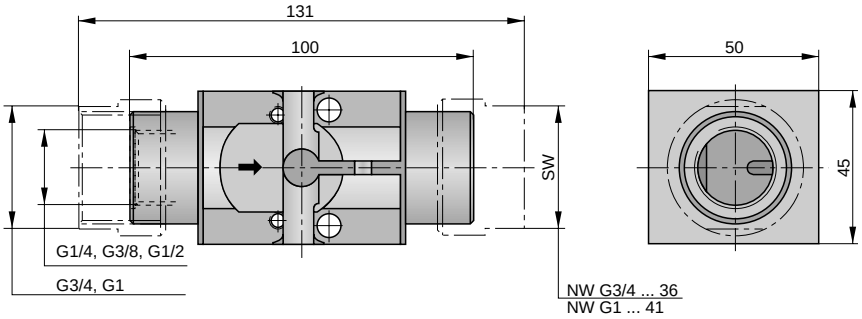

Order Instructions

Description	Port size	**Type**	**Order No.**
Air flow sensor	G1/4	**U-08**	**PL 08144**
Air flow sensor	G3/8	**U-10**	**PL 08109**
Air flow sensor	G1/2	**U-15**	**PL 08110**
Air flow sensor	G3/4	**U-20**	**PL 08111**
Air flow sensor	G1	**U-25**	**PL 08112**

Oil Reservoir

oilfit **Accessories**

Bi

Characteristics

Type	Bi
Connection	Without thread, directly flangeable to lubricator element
Installation	Vertical, filling plug on top (see drawing)
Mounting	With coupling kit to lubricator element
Oil capacity	250 cm^3
Oil supply	Without pressure (gravity feed)
Material	Polyester resin (PETP)

Dimensions (mm)

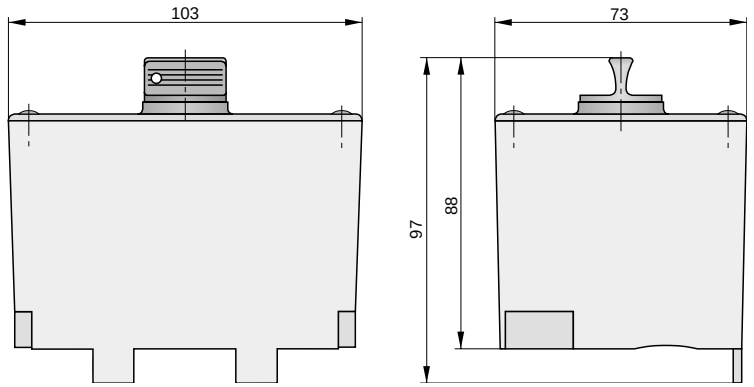

The reservoir provides oil supply for one or more lubricator element.

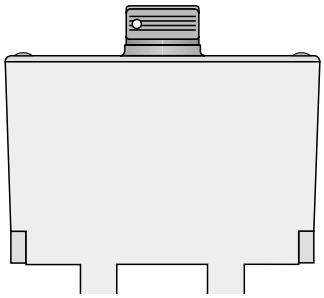

Order Instructions

Description	Type	Order No.
Oil reservoir directly flangeable to lubricato element	**Bi**	**PL 08108**

Accessories

Description	Type	Order No.
Coupling kit (in 9 parts)	**K**	**PL 08066**

Data Sheet No. 5.91.003E

A1P155E00KY00X

The right to introduce technical modifications is reserved

HOERBIGER ORIGA

Injection Lubricator Accessories

Plug screw
Connection kit
Oil tube
Coupling kit

oilfit

Plug Screw with Exhaust Port

The plug screw provides quick exhaust of lubricator element L10 in the combinations LUBI and LUBE. Exhaust port Ø optional (see order instructions).

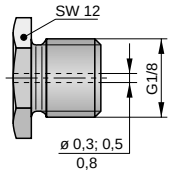

Order Instructions

Description	Ø Exhaust port	**Order No.**
Plug screw with exhaust port	0.3	**PL 08326**
Plug screw with exhaust port	0.5	**PL 08325**
Plug screw with exhaust port	0.8	**PL 08324**

Connection Kit - 12 parts

The connection kit consisting of 12 parts (for 3 pressure oil lines) is used for connecting pressure oil tubes with the lubricator element and the discharge element.

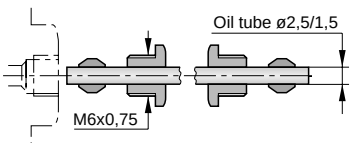

Order No.: PL 08185 (Type A)

Accessories

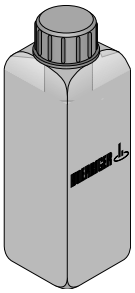

Order No.: KY 8766
see Data Sheet No. 5.61.050E

Oil Tube

Connects the lubricator element with the oil discharge element on the unit to be lubricated (tool, cylinder).
Material: polyamid (PA)
Supplied in lengths of 10 m, pre-filled with oil and ends plugged.

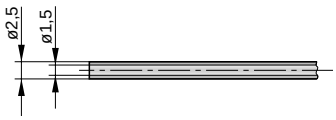

Order No.: PL 08187 (Type S)

Coupling Kit

The coupling kit is used for assemling all the components of the system.

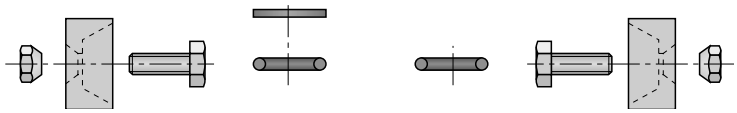

Order No.: PL 08066 (Type K)

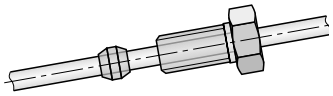

HOERBIGER ORIGA

A1P156E00KY00X

The right to introduce technical modifications is reserved

Air Connection with Oil Injector

oilfit **Accessories**

E-..
E_0

Dimensions (mm) Air Connection with Oil Injector

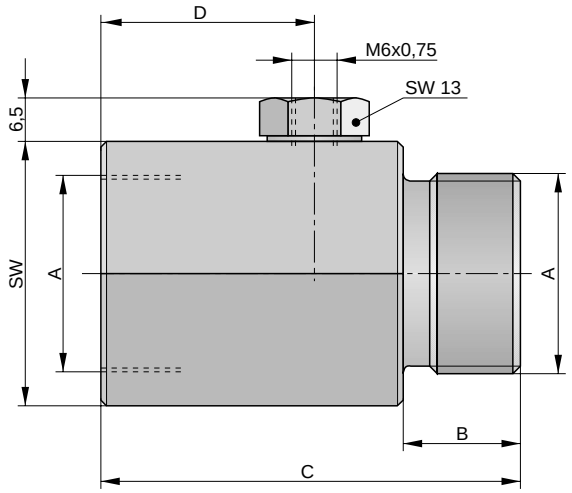

Dimension Table (mm)

Typ	A	B	C	D	SW
E-06	G1/8	8	35	17	22
E-08	G1/4	12	45	22	22

Order Instructions (inclusive E_0)

Description	Port size	**Type**	**Order No.**
Air connection with oil injector	G1/8	**E-06**	**PL 08100**
Air connection with oil injector	G1/4	**E-08**	**PL 08101**

A1P157E00KY00X

Oil Injector - Single

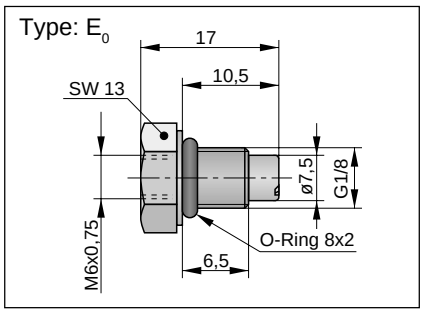

Oil injector with check valve for pressure oil line.

The air connection with oil injector connects the pressure oil line to the air line of a pneumatic unit (e.g. screws directly into a cylinder port).

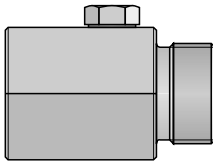

Order No.: PL 08091

Data Sheet No. 5.91.005E

The right to introduce technical modifications is reserved

HOERBIGER ORIGA

Oil Reservoir

with sight glass

Capacity: 2 l, 4 l

oilfit **Accessories**

B-04

Characteristics

System			Oil reservoir for gravity feed of one or more injection lubricators
Connection			Thread
Port size			Inlet: M16x1.5 Outlet: G3/8
Installation			Vertical (see drawing)
Mounting			4 screws M8 Mounting brackets are included in delivery
Oil capacity		cm^3	4000
Type			B-04
Oil supply			Unpressurized
Weight (mass)		kg	4.50

Dimensions (mm)

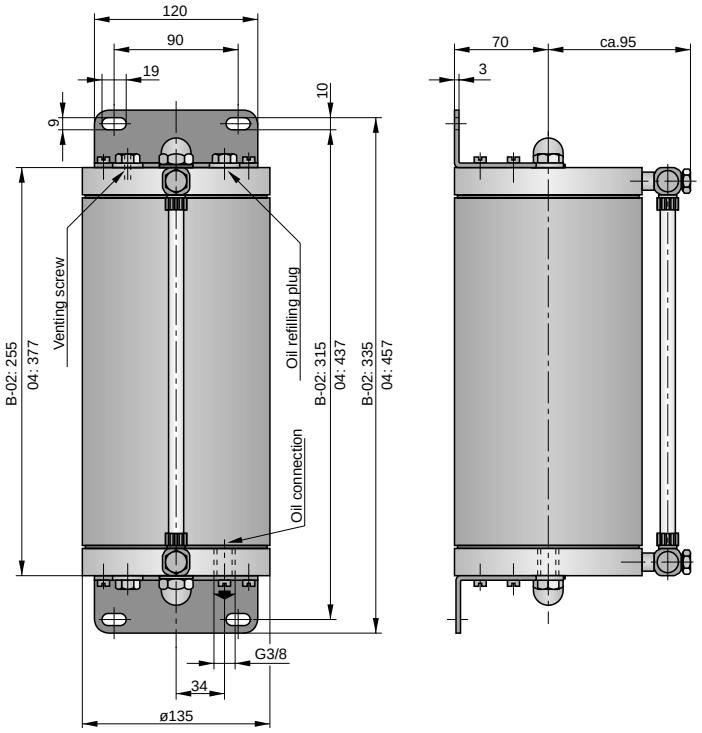

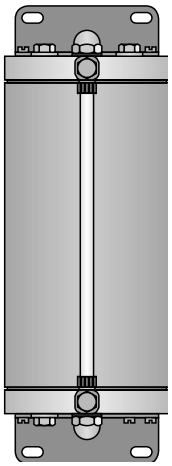

The oil reservoir supplies one or more injection lubricators.

Order Instructions

Description	Type	Order No.
Oil reservoir for 4 l oil	**B-04**	**PL 15534**

For product group list see 5.90.001E
For data sheets see 5.90.002E-5.90.008E
For accessories see 5.91.002E-5.91.008E

Data Sheet No. 5.91.006E

A1P182E00KY00X

The right to introduce technical modifications is reserved

HOERBIGER ORIGA

Atomizer

Types:
Flexible atomizer
Rigid atomizer

oilfit **Accessories**

Characteristics

Adjustment of oil feed	With setting screw in the back of the housing
Oil connection	G1/8 for discharge element E_0
Air connection	G1/8
Spray angle	Conical

Dimensions (mm) - Flexible Atomizer

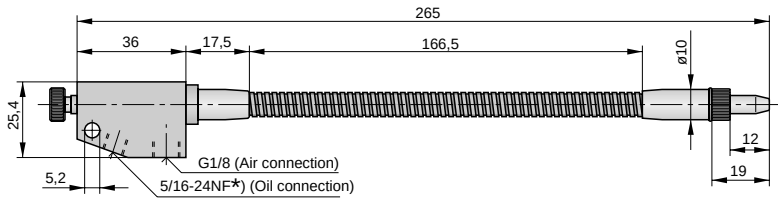

Dimensions (mm) - Rigid Atomizer

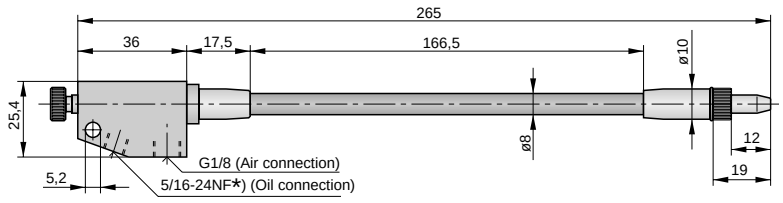

Accessories

Description	Type	Order No.
*) Adapter 5/16-24NF/G1/8	**B-6056**	**KX 6026**

Adjustable atomizer
for all kinds of spraying operations
(continuous jet).

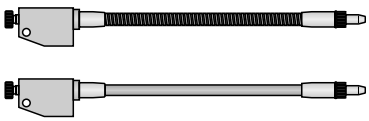

Order Instructions:
Flexible atomizer: **KY 9914**
Rigid atomizer: **KY 8783**

Data Sheet No. 5.91.008E

A1P283E00KY00X

The right to introduce technical modifications is reserved

HOERBIGER ORIGA

Central Air Line Lubricator

G1, G2

airfit magnum

EL-..

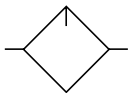

Characteristics			Pressures quoted as gauge pressure	
System			Micro-mist-lubricator with pilot operated differential pressure regulating valve for the oil-feed adjustment	
Type			**EL-25**	**EL-50**
Port size			**G1**	**G2**
Max. oil capacity		cm^3	2500	5000
Oil refilling			Manual - also during operation	
Installation			Vertical	
Medium and ambient temperatures	ϑ_{min} ϑ_{max}	°C °C	+5 +60	
Weight (mass)		kg	10	18
Recommended pre-filter			XF-1	LF 7-50
Size of micro-mist particles		µm	0.2-2	
Recommended oil viscosity		mm^2/s	32 (32 cSt) [1])	
Pneumatic Characteristic				
Recommended flow	Q_{min} Q_{max}	l/min(m^3/h) l/min(m^3/h)	**100 (6)** **5500 (330)**	**200 (12)** **17000 (1000)**
Operating pressure range	p_{max}	bar	10	
Differential pressure range	p_{min} p_{max}	bar bar	0.2 0.8	0.2 1

[1]) Use only recommended oils with viscosity VG32 to ISO 3448 (32 mm^2/s at 40°C) or HOERBIGER special oil, Order No.: KY 8766 (Cat.-No. 5.61.050E)

Differential pressure in relation to of the flow rate

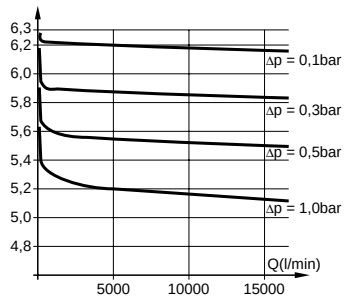

Installation Advice

In most cases it is advisable to instal HOERBIGER air line filters in branch pipes. When constant operating pressures are required (e.g. cylinders, pneumatic screw drivers, etc.) HOERBIGER pressure regulators should be used. If small amounts of oil-free air are needed, a HOERBIGER filter-water-separator followed by a MICROFIT submicrofilter can be installed (see Installation Diagram).

Installation Diagram

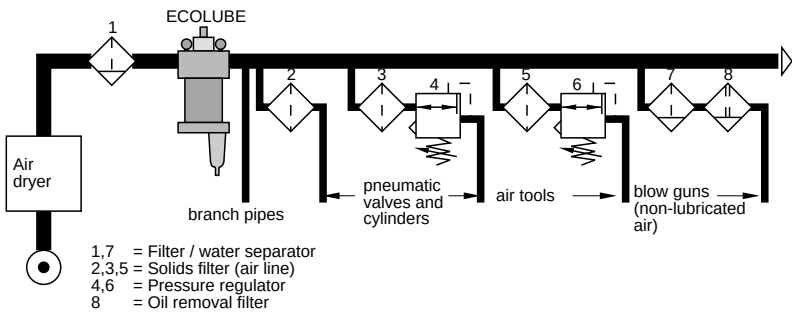

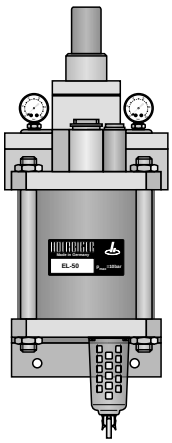

Mikro-mist-lubricator with oil-feed adjustment depending on differential pressure.

Comprising:
lubricator unit
2 gauges and mounting bracket

HOERBIGER ORIGA

A1P297E00KY00X

The right to introduce technical modifications is reserved

Dimensions (mm)

EL-25
EL-50

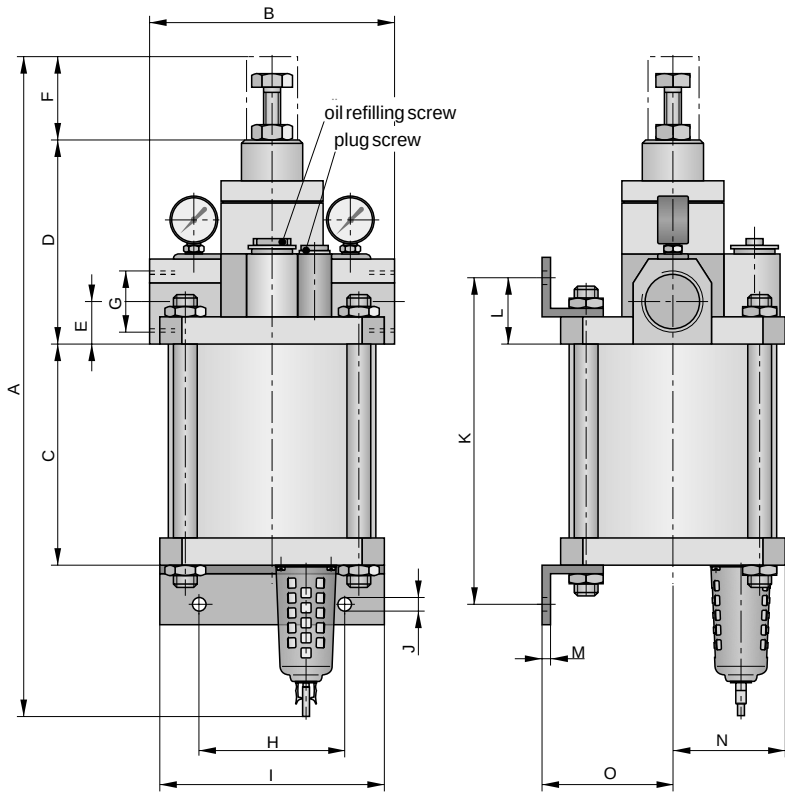

Accessories

Oil micro-mist tester G1

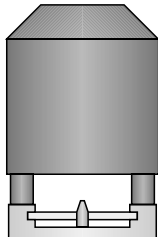

Order No.: PL 16775

Accessories

Differential pressure gauge
Assembly kit with mounting kit

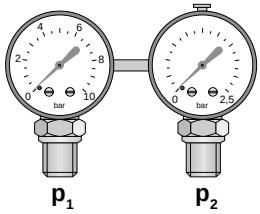

Order No.: EL-20/25 PL 17652
EL-40/50 PL 17653

Dimension Table

	A	B	C	D	E	F	G	H	I	J	K	L	M	N	O
EL-25	530	180	187	160	35	37	G1	115	180	18	304	77	3	90	110
EL-50	608	250	225	198	46	45	G2	150	225	13	342	72	6	112.5	124.1

Order Instructions

Description	Port size	**Type**	**Order No.**
Basic model with transparent glassfibre-reinforced plastic tube	G1	**EL-25**	**PB 15749-020**
	G2	**EL-50**	**PB 15549-020**
Model with electric oil level control (aluminium tube)	G2	**EL-50-E**	**PB 15549-026**

PNEUMATIC
GROUP

SPECIAL UNITS

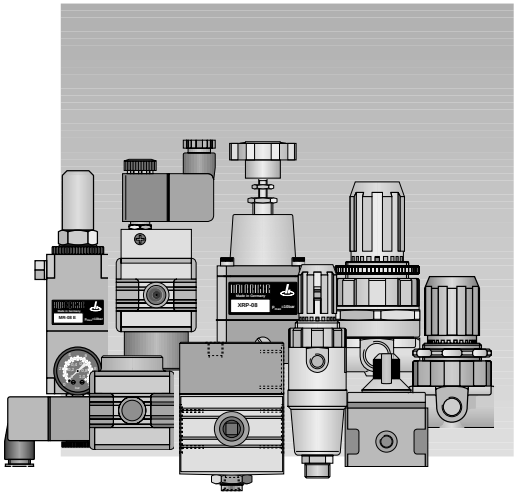

HOERBIGER
ORIGA

		Port size	Recommended flow (l/min)*	**Type**	Data Sheet No.
Dual pressure regulating valve		G1/4	550	**MR-08 P**	5.95.002E
		G1/4	550	**MR-08 E**	
Soft start valve		G1/4	550	**SDA-1/4**	5.95.015E
		G3/8	850	**SDA-3/8**	5.95.020E
		G3/8	850	**CDA-3/8**	
		G1/2	1900	**CDA-1/2**	
Stop valve		G1/4	550	**SDR-1/4 P**	5.95.016E
		G3/8	850	**SDR-3/8 P**	
		G1/4	550	**SDR-1/4 E**	
		G3/8	850	**SDR-3/8 E**	
		G3/8	850	**CDR-3/8 P**	5.95.019E
		G1/2	1900	**CDR-1/2 P**	
		G3/8	850	**CDR-3/8 E**	
		G1/2	1900	**CDR-1/2 E**	
Start-stop valve		G3/4	1900	**XDS-3/4**	5.95.017E
		G1	1900	**XDS-1**	
Water regulator		G1/8		**WRS-06**	5.95.010E
		G1/4		**WRS-08**	
Pressure relief valve		G1/2		**XR-15 E**	5.95.011E
Filter regulator		(Output) G1/4 (Input) G3/8	550	**MFRS-08**	5.95.012E
Precision pressure regulating valve		G1/4		**XRP-08-8**	5.95.013E
		G1/4		**XRP-08-4**	
		G1/4		**XRP-08-08**	
Pressure regulating valve for panel mounting		G1/8	300	**MRS-06**	5.95.021E
		G1/4	550	**MRS-08**	

* For max. flows see diagrams on single data sheet.
Max. flow is much higher than the given recommended flow.

A3P075E71EAA00X

The right to introduce technical modifications is reserved

Table of Contents see 5.00.001E

Dual Pressure Regulating Valve

G1/4

Actuation: Pneumatic
Electrical

Characteristics			Pressures quoted as gauge pressure	
System			Spring loaded diaphragm-type pressure regulating valve with pneumatic or electrical actuation	
Type			**MR-08P**	**MR-08E**
Actuation			Pneumatic	Electrical
Port size			G1/4 G1/8 (at pilot control port)	
Installation			In any position	
Medium and ambient temperatures	ϑ_{min} ϑ_{max}	°C °C	0 +60	When using below freezing point it is necessary to consult us
Weight (mass)		kg	0.55	0.65
Pneumatic Characteristic				
Operating pressure range - inlet pressure	$p_{1\,min}$ $p_{1\,max}$	bar bar	0 10	
Operating pressure range - outlet pressure	$p_{2\,min}$ $p_{2\,max}$	bar bar	0.5 8	(2 different pressures can be set)
Min. pressure difference	p_1-p_2	bar	0.2	
Hysteresis p_1=10/p_2=0 Hysteresis p_1=10/p_2=8		bar bar	1.6 0.6	
Recommended flow[1)]	Q_n	l/min m³/h	**550** **33**	
Electrical Characteristic				
Voltage			AC	DC
Nominal Voltage	Un	V	220	24
			Further voltages on request	
Initial power consumption		VA (W)	8.5	2.5
Continous consumption		VA (W)	6.0	2.5
Duty cycle	ED	%	100	
Electrical protection			IP 65 to DIN 40050 (with plug)	
Insulating material			F to VDE 0580	
Connection			Plug to DIN 43650	

[1)] at p_2=6 bar and 25 m/s

airfit

MR-08P

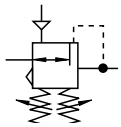

MR-08E

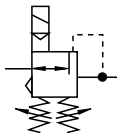

For setting 2 different outlet pressures in one unit.
Switching from the lower to the higher value is effected pneumatically or electrically.

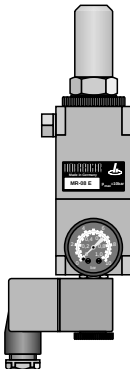

Application:
Energy saving during cylinder operations, for clamping devices etc.

Example:
Different operating pressures can be set for the forward and reverse stroke of a cylinder. Energy saving increases proportionally to the difference of the two outlet pressures.

Flow Characteristics

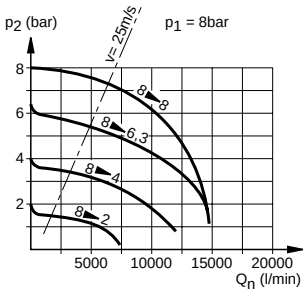

Outlet Pressure Variation with Fluctuating Inlet Pressure

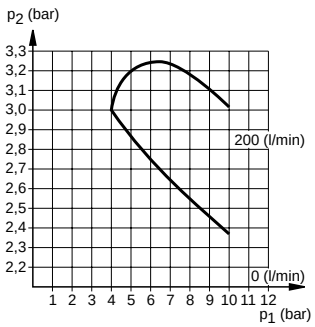

Data Sheet No. 5.95.002E-1

A1P251E00KY00X

The right to introduce technical modifications is reserved

HOERBIGER ORIGA

Dual Pressure Regulating Valve Pneumatically Actuated
Type: MR-08P

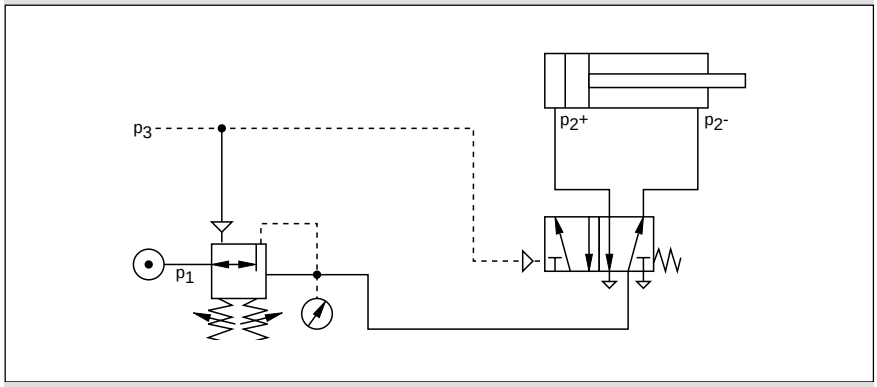

The actuating pressure p_3 both actuates the higher operating p_2+ on the dual pressure regulating valve and switches the 5/2 way valve, so that the cylinder makes its forward stroke with the higher pressure p_2+.
When actuating pressure p_3 is removed, the lower pressure p_2- is set on the dual pressure regulating valve and the 5/2 way valve switches back, so that the cylinder makes its return stroke with the lower pressure p_2-.

Dual Pressure Regulating Valve Electrically Actuated
Type: MR-08E

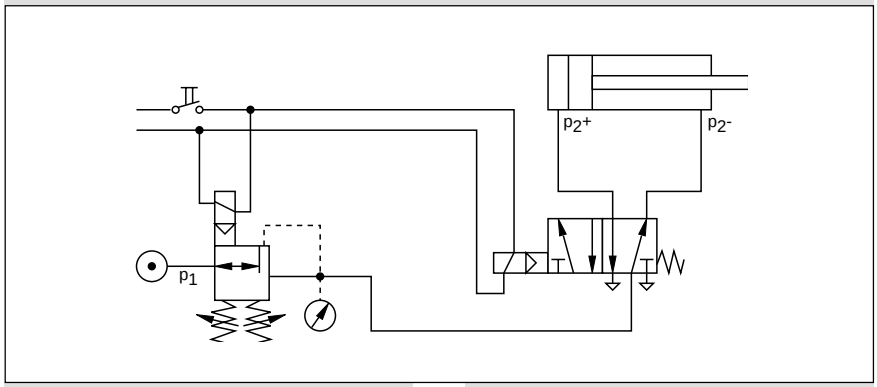

The electrical signal both actuates the higher operating pressure p_2+ on the dual pressure regulating valve and switches the 5/2 way valve, so that the cylinder makes its forward stroke with the higher pressure p_2+.
When the electrical signal stops, the lower pressure p_2- is set on the dual pressure regulating valve and the 5/2 way valve switches back, so that the cylinder makes its return stroke with the lower pressure p_2-.

Dimensions (mm)
Type: MR-08P

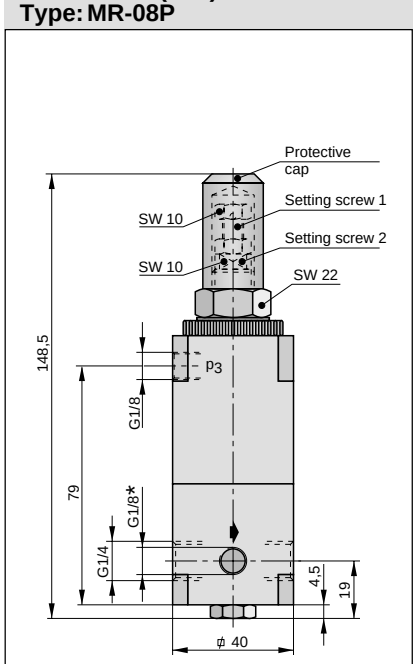

* Gauge port on both sides

Dimensions (mm)
Type: MR-08E

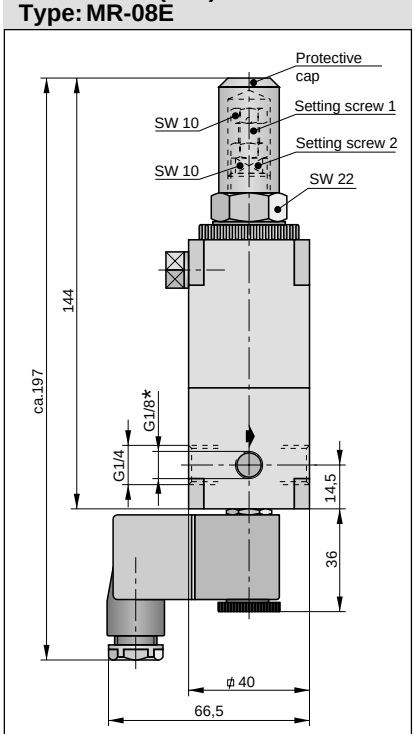

* Gauge port on both sides

Functioning

Both the higher p_2+ and the lower p_2- operating pressure are set by means of setting screws.

p_2- with setting screw 2. The screw is secured by a knurled nut.

p_2+ with setting screw 1. The screw is secured by a hexagon nut.

Accidental changes of the set pressures are prevented by a protctive cap.

The respective pressure can be shown by a gauge, which is an optional accessory.

Order Instructions

Type	Actuation	Voltage	**Order No.**
MR-08P	Pneumatic	-	**PB 21649-200**
MR-08E	Electrical	24 V=	**PB 21649-203**
		220 V/50 Hz	**PB 21649-206**

Other voltages on request.

Accessories

Description	**Order No.**
Gauge	**KZ 8813**

Pressure Regulating Valve

G1/8, G1/4

for use with water

WRS

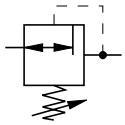

Characteristics			Pressures quoted as gauge pressure	
System			Diaphragm type pressure regulator (spring loaded)	
Type			**WRS-06**	**WRS-08**
Port size			**G1/8**	**G1/4**
Installation			In-line mounting, wall mounting with bracket or panel mounting (Ø30.3$^{+0.2}$ mm to DIN 43696)	
Medium and ambient temperatures	ϑ_{min} ϑ_{max}	°C °C	0 +60	(further temperatures on request)
Weight (mass)		kg	0.25	
Pneumatic Characteristics				
Operating pressure range - inlet pressure	$p_{1\,min}$ $p_{1\,max}$	bar bar	0 10	
Operating pressure range - outlet pressure	$p_{2\,min}$ $p_{2\,max}$	bar bar	0.5 on request 8	0.5 0.5[1)] 3 4
Min. pressure difference	p_1-p_2	bar	0.2	

[1)] By the use of special springs, the outlet pressure can be precisely regulaten the specified p_2 range.

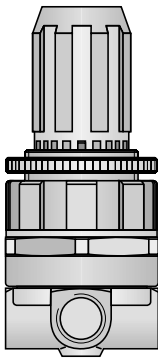

Diaphragm-type pressure regulator (spring loaded) for water

- Robust brass housing with glassfibre-reinforced polymer upper body for hard use
- Mounting ring included
- Handwheel lockable

HOERBIGER ORIGA

For product group list see 5.95.001E

Data Sheet No.5.95.010E-1

A1P328E00KY00X

The right to introduce technical modifications is reserved

Accessories

Gauge
Ø 40, 0-10 bar, G1/8

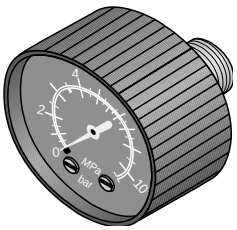

Order No.: KZ 8813

Accessories

Mounting bracket

Order No.: PL 15531

Dimensions (mm)

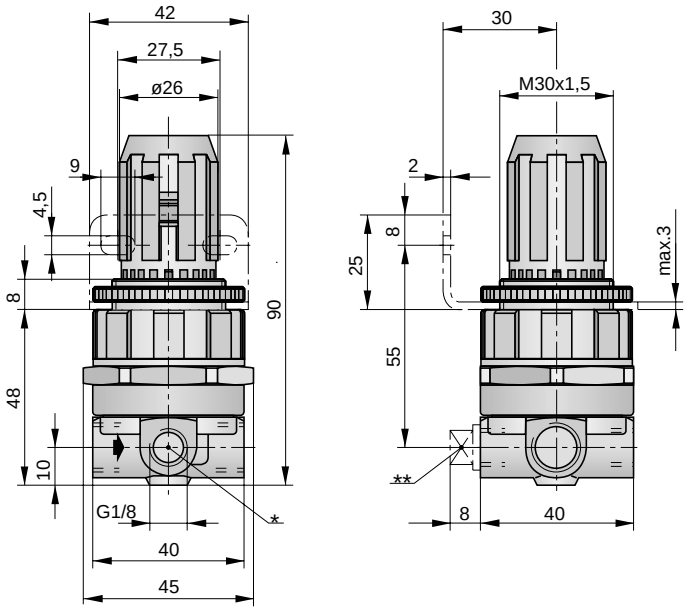

* Two opposite gauge ports.
** On delivery the plug is not assembled.

Order Instructions

Description	Port size	**Type**	**Order No.**
06	G1/8	**WRS-06**	**PB 21749-020**
08	G1/4	**WRS-08**	**PB 21649-020**

Accessories

Description	**Order No.**
Gauge Ø 40, 0-10 bar	**KZ 8813**
Mounting bracket	**PL 15531**
Regulator spring for operating pressure 3 bar	**PL 15876**
Regulator spring for operating pressure 4 bar	**PL 16776**
Mounting ring for sheet thickness 6 mm (hole Ø 36.5 - 38 mm)	**PL 16198**
Mounting ring for sheet thickness 8 mm (hole Ø 36.5 - 38 mm)	**PL 15925**

Pressure Relief Valve

G1/2

airfit C, X

XR-15 E

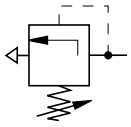

Characteristics			Pressures quoted as gauge pressure
System			Pressure relief valve (pilot operated) with adjustable opening pressure and high flow capacity
Type			**XR-15 E**
Port size			**G1/2**
Installation			beliebig
Medium and ambient temperatures	ϑ_{min} ϑ_{max}	°C °C	0 +60 (further temperatures on request)
Weight (mass)		kg	0.75
Pneumatic Characteristics			
Operating pressure range - inlet pressure	$p_{1\,min}$ $p_{1\,max}$	bar bar	0 16
Operating pressure range - outlet pressure	$p_{2\,min}$ $p_{2\,max}$	bar bar	0.5 10 (16)

2000 – discontinued
for the new Pressure Relief Valve
Type SR-..E
see data sheet no. 5.95.022E

A1P329E00KY00X

The right to introduce technical modifications is reserved

Exhaust Flow

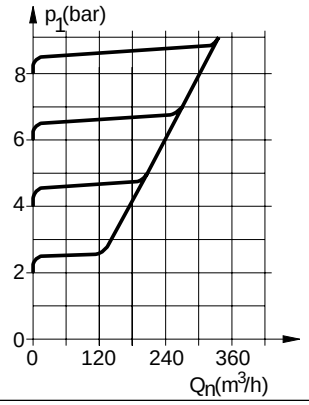

Assembly Instructions

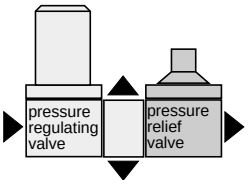

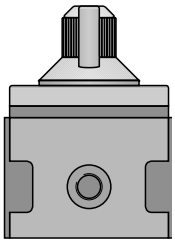

Pressure relief valve with adjustable opening pressure and high flow capacity.

For air preparation units see 5.20-002E-5.20.005E
For product group list see 5.95.001E

HOERBIGER ORIGA

Accessories

Gauge
Ø 50, 0-10 bar, G1/8

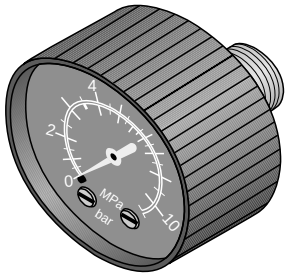

Order No.: KZ 8815

Accessories

Coupling kit
for connecting 2 single units

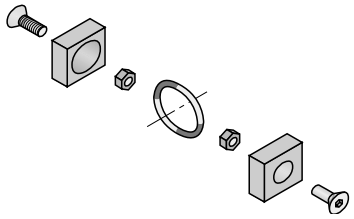

Order No.: PL 08267

Accessories

Porting block kit
to provide unlubricated air
for ruther details see 5.21.001E

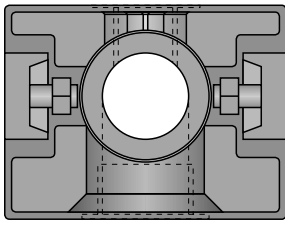

Order No.: PL 15003

Dimensions (mm)

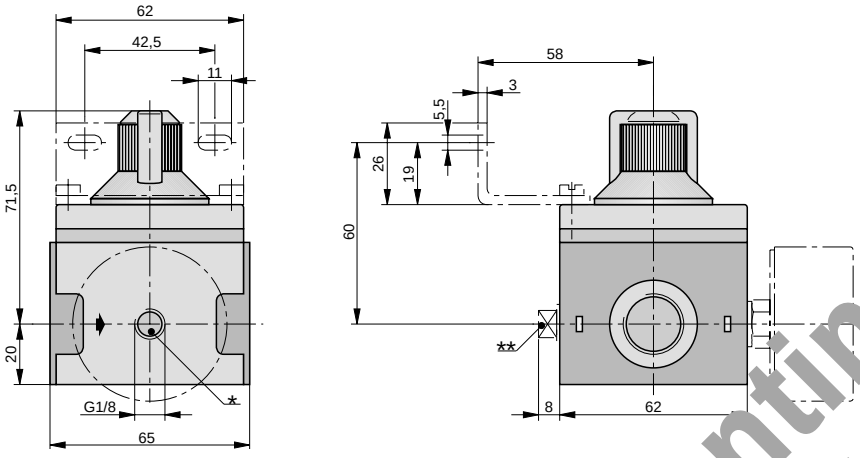

2000 – discontinued
for the new Pressure Relief Valve
Type SR-..E
see data sheet no. 5.95.022E

Order Instructions

Description	Port S.	Type	Order No.
Basic model	G1/2	XR-15 E	PB 10549-100

Accessories

Description	Order No.
Gauge Ø 50 mm, 0-10 bar, G1/8	KZ 8815
Mounting kit	PL 15169
Coupling kit	PL 08267
Porting block kit G1/2, G1/4	PL 15003
3/2 way shut-off valve XDV-15	PB 12349-000
Regulator spring for operating pressure 16 bar	PL 15758

Filter-Regulator

G3/8

for small capacity Compressors

airfit

MFRS

Characteristics			Pressures quoted as gauge pressure
System			Filter element combined with piston-type pressure regulating valve (spring loaded) in strong housing.
Type			**MFRS-08**
Port size			**G3/8** inlet **G1/4** outlet
Pore size of filter element		µm	30
Condensate drainage			Into receiver below
Installation			Vertical
Medium and ambient temperatures	ϑ_{min} ϑ_{max}	°C °C	0 +60 at 10 bar
Weight (mass)		kg	0.5
Pneumatic Characteristic			
Operating pressure range - inlet pressure	$p_{1\,min}$ $p_{1\,max}$	bar bar	0 10
Operating pressure range - outlet pressure	$p_{2\,min}$ $p_{2\,max}$	bar bar	0.5 8
Min. pressure difference	p_1-p_2	bar	0.2
Hysteresis p_1=10/p_2=0 Hysteresis p_1=10/p_2=8		bar bar	1,6 0,6
Recommended flow[1)]	Q_n	l/min m³/h	**550** **33**

[1)] at p_2 = 6.3 bar and 25 m/s

Dimensions (mm)

Type: MFRS-10

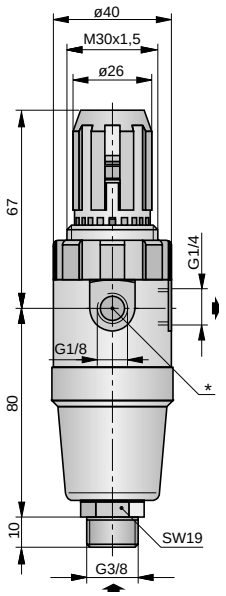

* Gauge port G1/8

Assembly Instructions

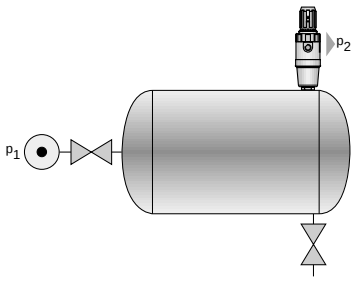

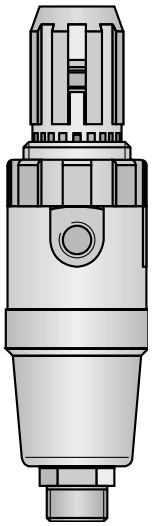

Robust filter-regulator for direct mounting on to compressor's receiver.

Order Instructions

Description	Type	Order No.
Basic model	**MFRS-08**	**PB 40199-029**

For product group list see 5.95.001E

Data Sheet No. 5.95.012E

A1P307E00KY00X

The right to introduce technical modifications is reserved

HOERBIGER ORIGA

Precision Pressure Regulator

G1/4

Characteristics			Pressures quoted as gauge pressure		
System			Diaphragm-type pressure regulating valve (2 diaphragm), pre-stage spring controlled, integrated filter		
Type			**XRP-08-8**	**XRP-08-4**	**XRP-08-08**[1]
Port size			**G1/4**		
Installation			In any position		
Medium and ambient temperatures	ϑ_{min} ϑ_{max}	°C °C	-5 +60		
Weight (mass)		kg	0,7		
Material					
Housing			Aluminium		
Internals			Partly Ms, NBR		
Pneumatic Characteristic					
Operating pressure range - inlet pressure	$p_{1\,min}$ $p_{1\,max}$	bar bar	1 10	1 7	1 7
Operating pressure range - outlet pressure	$p_{2\,min}$ $p_{2\,max}$	bar bar	0.5 8	0.1 4	0.02 0.8
Own air usage	Q	l/min	max. 10 at full airflow		
Hysteresis		bar	max. 0.1 bar		
Recommended flow[2]	Q_n	l/min	**75 x (p_2 + 1)** **for p_2 pressures quoted in bar**		

[1] The precision pressure regulator should not be used for "static" applications, i.e. with zero airflow. In such cases a small "artificial" airflow should be created on the secondary side using a 0.3 - 0.6 mm Ø jet.

[2] Corresponds to 25 m/s with NW8 mm bore.
Higher airspeeds can lead to large pressure drops in the connected air lines, although the precision pressure regulator will handle larger airflows in most cases (see diagrams).

XRP

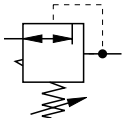

2000 - discontinued

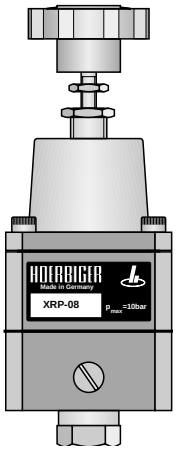

A1P453E00KY00X

The right to introduce technical modifications is reserved

Flow Characteristic

Type: XRP-08-8

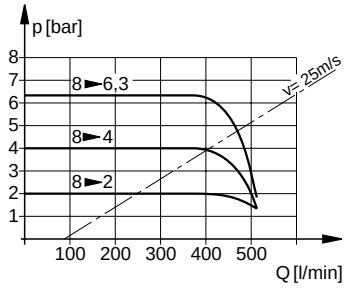

Flow Characteristic

Type: XRP-08-4

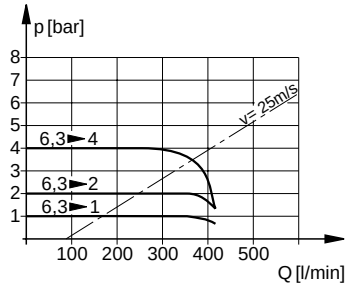

Flow Characteristic

Type: XRP-08-08

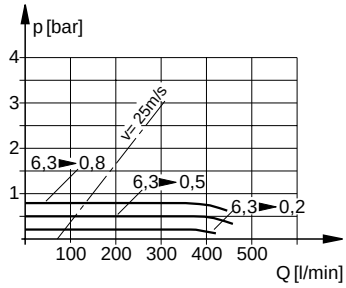

Dimensions (mm)

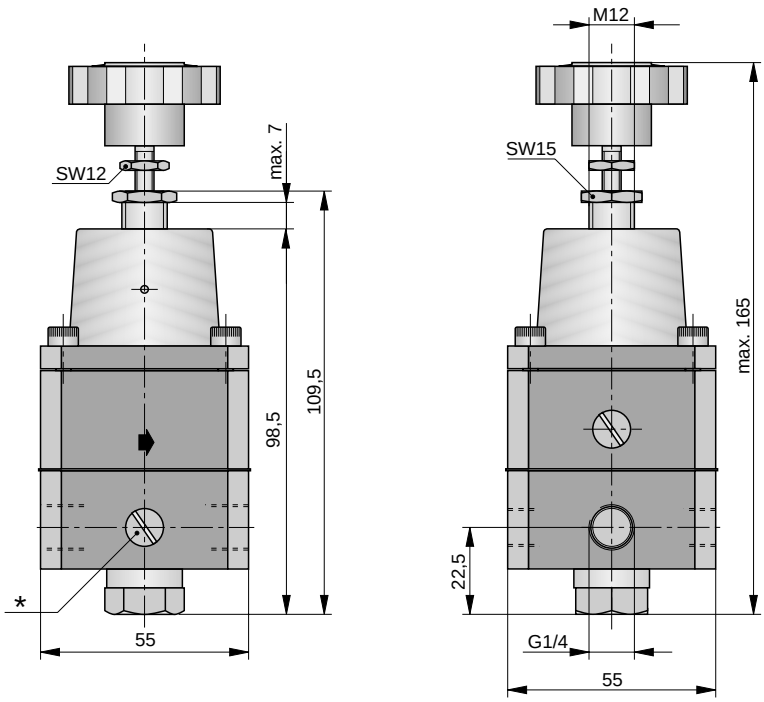

* Two opposite gauge ports G1/8
On delivery the plug screws are not assembled.

Accessories

Gauge
Ø 40, G1/8 hinten

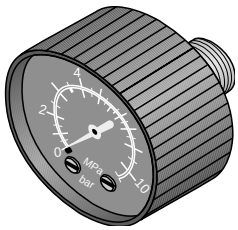

Order No.: KZ 8894 0 - 1.6 bar
KZ 8811 0 - 4 bar
KZ 8813 0 - 10 bar

Order Instructions

Description	Port size	**Type**	**Order No.**
Precision pressure regulator	G1/4	**XRP-08-8**	**PB 03249-000**
Precision pressure regulator	G1/4	**XRP-08-4**	**PB 03249-001**
Precision pressure regulator	G1/4	**XRP-08-08**	**PB 03249-002**

Soft Start Valve

G1/4, G3/8

(Pressure build-up valve)

SDA-..

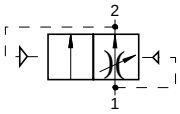

Characteristics			Pressures quoted as gauge pressure	
System			Poppet valve with integral throttle for slow pressure build-up (e.g. after emergency shutdown). At 0.5 x operating pressure the valve switches to full flow.	
Type			**SDA-1/4**	**SDA-3/8**
Port size			G1/4	G3/8
Installation			In any position - direct assembly to air preparation units series AIRFIT-swing	
Medium and ambient temperatures	ϑ_{min} ϑ_{max}	bar bar	0 (further temperatures +60 on request)	
Weight (mass)		kg	0.35	
Pneumatic Characteristics				
Operating pressure range	p_{min} p_{max}	bar bar	2 16	
Recommended flow[1)]	Q_n	l/min m³/h	**550** **33**	**850** **51**
Maximum flow[2)]	Q_{max}	l/min m³/h	1500 90	1600 96

[1)] at p_2 = 6.3 bar and 25 m/s
[2)] at p_1 = 6.3 bar and Δp = 1 bar

Flow time in start phase with adjustment screw fully open and 6.3 bar: 1,5 s/l

Dimensions(mm)

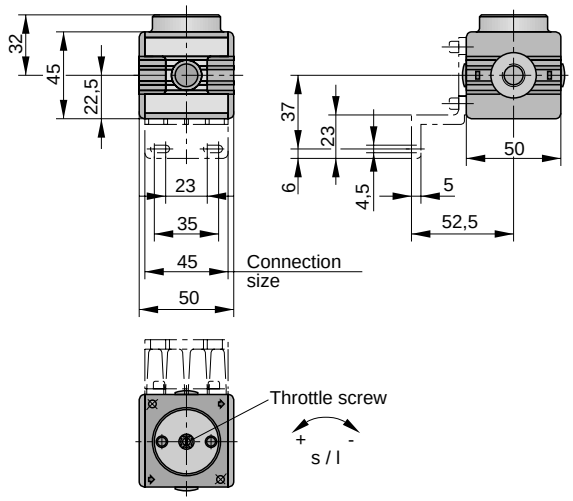

Order Instructions

Description	Port size	**Type**	**Order No.**
Soft start valve	G1/4	**SDA-1/4**	**PB 47149-100**
Soft start valve	G3/8	**SDA-3/8**	**PB 47249-100**

Accessories

Description	**Order No.**
Coupling kit	**PL 16959**

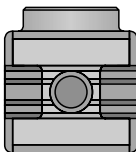

Safety valve for slow pressure build-up in pneumatic circuits. It prevents uncontrolled movements of the pneumatic components under the impact of full operating pressure. Pressure build-up time can be adjusted with the throttle screw.

For soft start valve G1/2 see 5.95.004E
For air preparation units see 5.12.002E - 5.12.008E
For product group list see 5.95.001E

Data Sheet No. 5.95.015E

A1P497E00KY00X

The right to introduce technical modifications is reserved

HOERBIGER ORIGA

Stop Valve

G1/4, G3/8

Actuation: Pneumatic
Electrical

Characteristics			Pressures quoted as gauge pressure	
System			3/2 way poppet valve with pneumatic or electrical actuation and integrated exhaust silencer	
Type			**SDR-1/4 P (E)**	**SDR-3/8 P (E)**
Actuation			Pneumatic(P) or electrical (E)	
Port size			**G1/4**	**G3/8**
Installation			In any position - direct assembly to the soft start valve SDA-1/4 or to air preparation units sereies AIRFIT swing	
Medium and ambient temperatures	ϑ_{min} ϑ_{max}	°C °C	0 +60	(further temperatures on request)
Weight (mass)		kg	0.5 (0.8)	0.5 (0.8)
Pneumatic Characteristic				
Operating pressure range	p_{min} p_{max}	bar bar	2 16	
Recommended flow[1)]	Q_n	l/min m³/h	**550** **33**	**850** **51**
Maximum flow[2)]	Q_n	l/min m³/h	1500 90	1600 96

[1)] at p_2 = 6,3 bar and 25 m/s
[2)] at p_1 = 6.3 bar, Δp = 1 bar

SDR-.. P

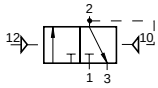

SDR-..E

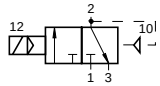

Venting Time in Relation to Volume	
Pressure Reduction Range	**Ventin Time (s) ***
von 8 → 0.1bar	0.7 x V (l) = t (s)
von 6 → 0.1bar	0.65 x V (l) = t (s)
von 4 → 0.1bar	0.55 x V (l) = t (s)
von 2 → 0.1bar	0.45 x V (l) = t (s)

* Notes: This calculation assumes short connections with NW 8 mm tubing directly after the SDR stop valve.

Assembly Instructions

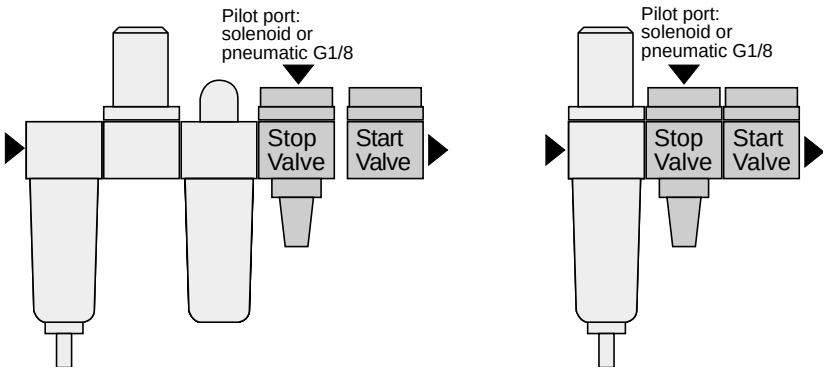

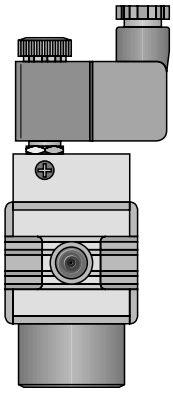

The stop valve is used in conjunction with the soft start valve for exhausting pneumatic circuits.

HOERBIGER ORIGA

A1PP511E00KY00X

The right to introduce technical modifications is reserved

Dimensions (mm)
Type: SDR-1/4 P, SDR-3/8 P

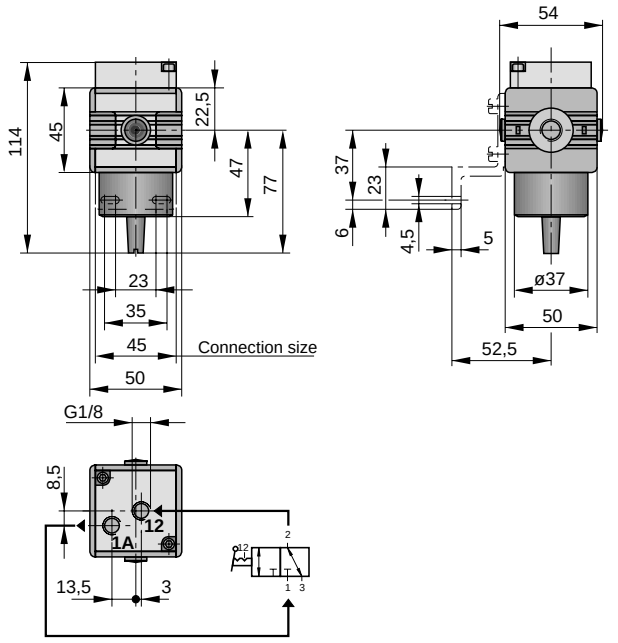

Dimensions (mm)
Type: SDR-1/4 E, SDR-3/8 E

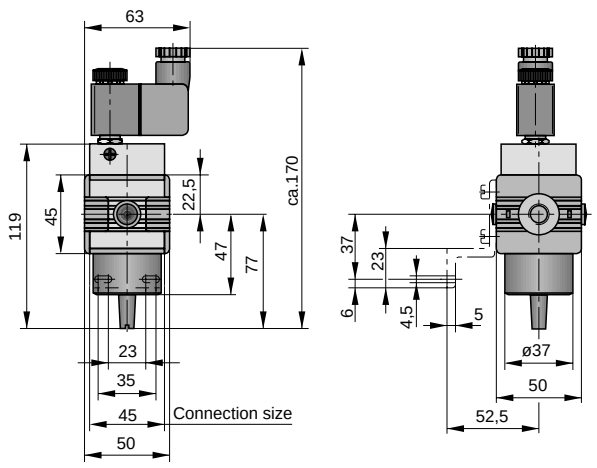

Order Instructions

Description	Actuation	Symbol	Nominal voltage	Port size	**Type**	**Order No.**
Stop Valve	Pneumatic	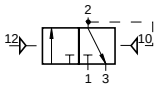	–	G1/4	**SDR-1/4 P**	**PB 47149-200**
			–	G3/8	**SDR-3/8 P**	**PB 47249-200**
	Electrical	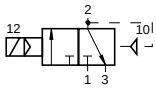	24 V DC	G1/4	**SDR-1/4 E**	**PB 47149-201**
			24 V DC	G3/8	**SDR-3/8 E**	**PB 47249-201**
			220 V/50Hz	G1/4	**SDR-1/4 E**	**PB 47149-204**
			220 V/50Hz	G3/8	**SDR-3/8 E**	**PB 47249-204**

Accessories

Description	**Order No.**
Mounting kit	**PL16965**
Coupling kit	**PL 16959**

Start-Stop Valve

G3/4, G1

Actuation: Pneumatic

XDS-..

Characteristics			Pressures quoted as gauge pressure	
System			Start-stop valve with pneumatic actuation and built-in exhaust silencer	
Type			**XDS-3/4**	**XDS-1**
Actuation			Pneumatic	
Port size			**G3/4**	**G1**
Installation			In any position	
Medium and ambient temperatures	ϑ_{min} ϑ_{max}	bar bar	0 +60 (further temperatures on request)	
Weight (mass)		kg	1.75	1.75
Pneumatic Characteristics				
Operating pressure range	p_{min} p_{max}	bar bar	2 10	
Recommended flow[1)]	Q_n	l/min m³/h	**3500** **210**	**5000** **300**
Maximum flow[2)]	Q_{max}	l/min m³/h	14000 845	16000 965

[1)] at p_1 = 6.3 bar and 25 m/s
[2)] at p_1 = 6.3 bar and Δp = 1 bar

Flow time in start phase with adjustment screw fully open and 6.3 bar: 0.03 s/l

Venting Time in Relation to Volume

Pressure Reduction from to	**Venting Time (s) ***
8 → 0.1bar	0.085 x V (l) = t (s)
6 → 0.1bar	0.075 x V (l) = t (s)
4 → 0.1bar	0.07 x V (l) = t (s)

* Note:
This calculation assumes short connections with NW 25 mm tubing directly after the XDS stop valve

The start function provides slow pressure build-up and the stop function provides venting in pneumatic equipment.

- Easily adaptable to customer's choice of colour and private labelling
- Thread available pressure build-up time adjustable
- Start and stop functions combined in one unit

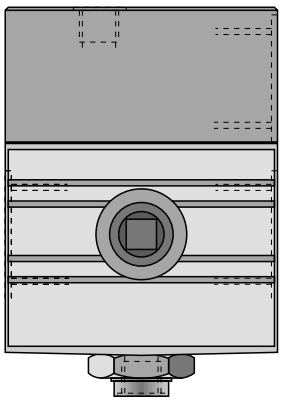

Installation Instructions

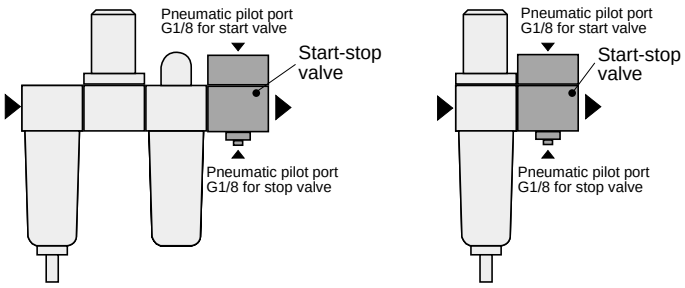

For air preparation units see 5.22.002E - 5.22.003E
For product group list see 5.95.001E

Data Sheet No. 5.95.017E-1

A1P512E00KY00X

The right to introduce technical modifications is reserved

Examples of Circuits

Combined start/stop function

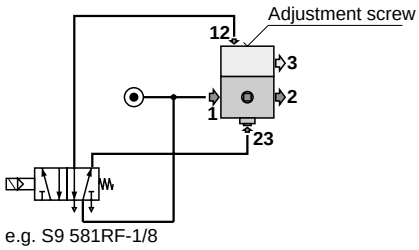

Combined start/stop function with acknowledgment

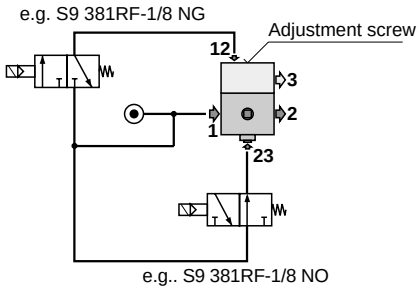

Start function

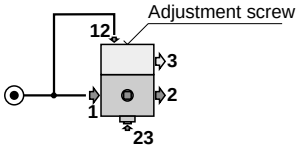

Dimensions (mm)
Type: XDS-3/4, XDS-1

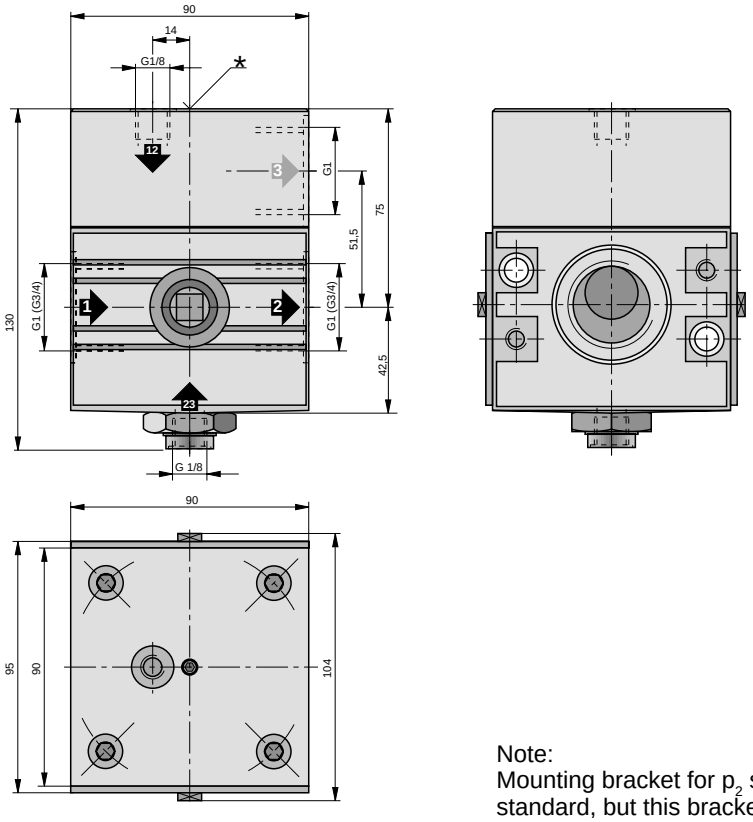

Note:
Mounting bracket for p_2 side is included as standard, but this bracket is only needed if a G1 exhaust silencer is used.
Please order standard bracket separately.

* Adjustment screw for pressure build-up time (SW 3 socket screw)

Order Instructions

Description	Actuation	Port size	**Type**	**Order No.**
Start-stop valve	pneumatic	G3/4	**XDS-3/4**	**PB 32649-100**
		G1	**XDS-1**	**PB 32749-100**

Accessories

Description	**Order No.**
Coupling kit	**PL15670**
Mounting kit	**PL15669**

Stop Valve

G3/8, G1/2

Actuation: Pneumatic
Electrical

airfit **comfort**

CDR-3/8 P
CDR-1/2 P

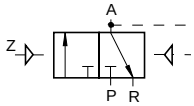

CDR-3/8 E
CDR-1/2 E

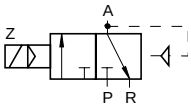

Characteristics			Pressures quoted as gauge pressure			
System			3/2 way poppet valve with pneumatic or electrical actuation and integrated exhaust silencer			
Type			**CDR-3/8 P**	**CDR-1/2 P**	**CDR-3/8 E**	**CDR-1/2 E**
Actuation			Pneumatic		electrical	
Port size			**G3/8**	**G1/2**	**G3/8**	**G1/2**
Installation			In any position - direct assembly to the soft start valve CDA or to air preparation units sereies AIRFIT comfort			
Medium and ambient temperatures	ϑ_{min} ϑ_{max}	°C °C	0 +60	(further temperatures on request)		
Weight (mass)		kg	0.7		0.8	
Pneumatic Characteristic						
Operating pressure range	p_{min} p_{max}	bar bar	2 16			
Recommended flow[1)]	Q_n	l/min m³/h	**850** **51**	**1900** **114**	**850** **51**	**1900** **114**
Maximum flow[2)]	Q_{max}	l/min m³/h	2500 150	2900 174	2500 150	2900 174

[1)] at p_2 = 6,3 bar and 25 m/s
[2)] at p_1 = 6.3 bar, Δp = 1 bar

Flow Characteristic

Type: CDR-1/2

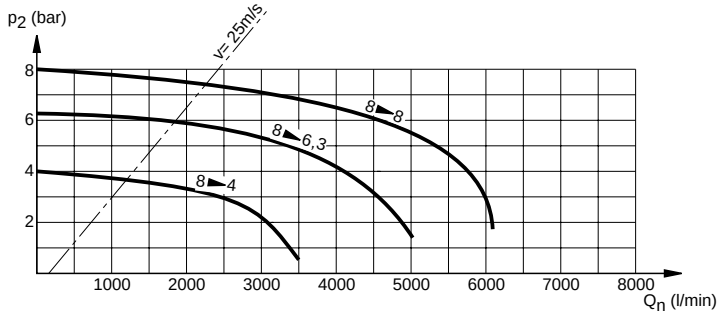

Assembly Instructions

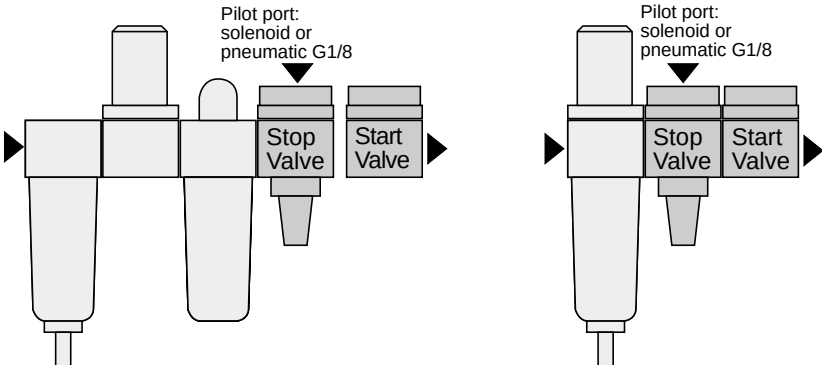

The stop valve is used in conjunction with the soft start valve for exhausting pneumatic circuits.

- Easy and quick installation of mounting kit
- Suitable for direct wall mounting
- Modern design
- Version with NPTF thread

HOERBIGER ORIGA

A1P557E00KY00X

The right to introduce technical modifications is reserved

Actuation: pneumatic, **Type: CDR-3/8 P, CDR-1/2 P**
electrical, **Type: CDR-3/8 E, CDR-1/2 E**

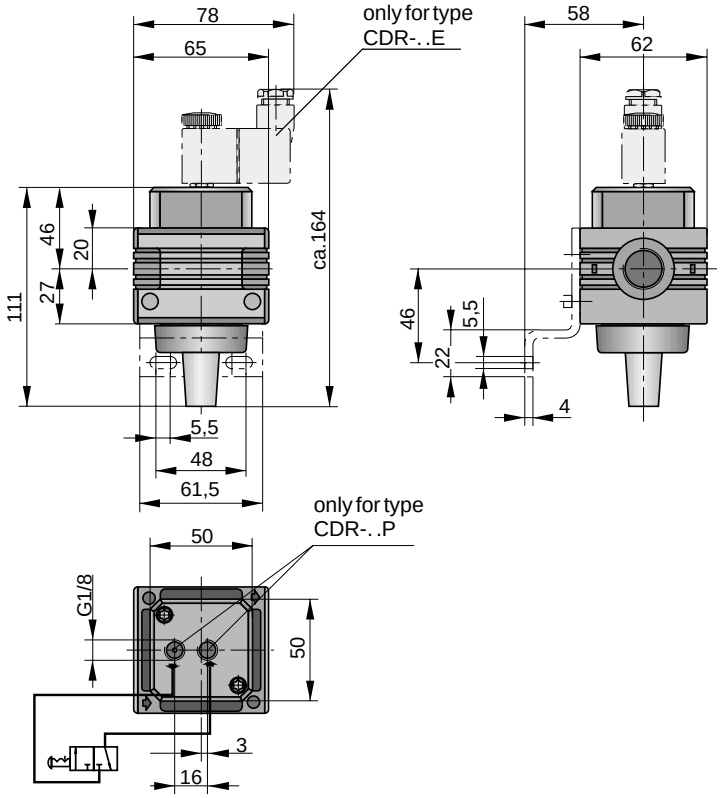

Order Instructions

Description	Actuation	Symbol	Nominal voltage	Port size	**Type**	**Order No.**
Stop Valve	Pneumatic	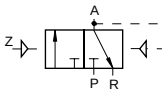		G3/8	**CDR-3/8 P**	**PB 57249-200**
				G1/2	**CDR-1/2 P**	**PB 57349-200**
	Electrical	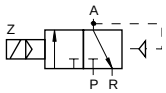	24 V DC	G3/8	**CDR-3/8 E**	**PB 57249-201**
				G1/2	**CDR-1/2 E**	**PB 57349-201**
			230 V/50 Hz	G3/8	**CDR-3/8 E**	**PB 57249-204**
				G1/2	**CDR-1/2 E**	**PB 57349-204**

Accessories

Description	**Order No.**
Mounting kit	**PL 17518**
Coupling kit	**PL 17608**
Adapter kit G3/4	**PL 17682**

Soft Start Valve

G 3/8, G1/2

(Pressure build-up valve)

airfit comfort

CDA-3/8
CDA-1/2

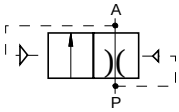

Characteristics			Pressures quoted as gauge pressure	
System			Poppet valve with integral, adjustable throttle*) for slow pressure build-up (e.g. after emergency shutdown). At 0.5 x operating pressure the valve switches to full flow.	
Type			**CDA-3/8**	**CDA-1/2**
Port size			**G3/8**	**G1/2**
Installation			In any position - direct assembly to air preparation units series AIRFIT-comfort	
Medium and ambient temperatures	ϑ_{min} ϑ_{max}	bar bar	0 (further temperatures +60 on request)	
Weight (mass)		kg	0.60	
Pneumatic Characteristics				
Operating pressure range	p_{min} p_{max}	bar bar	2 16	
Recommended flow[1)]	Q_n	l/min m³/h	**850** **51**	**1900** **114**
Maximum flow[2)]	Q_{max}	l/min m³/h	3500 210	3700 222

[1)] at p_2 = 6.3 bar and 25 m/s
[2)] at p_1 = 6.3 bar and Δp = 1 bar

***) Note:**
During the start-phase no components in the system should consume any air (build-up only).

Flow time in start phase with adjustment screw fully open and 6.3 bar: 1.5 s/l

A1P558E00EA00X

Flow Characteristic

Type: CDA-1/2

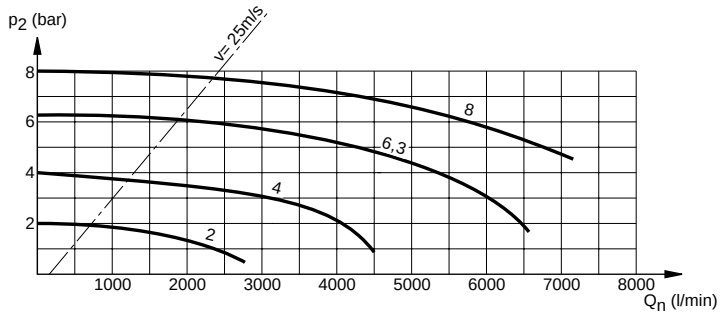

Safety valve for slow pressure build-up in pneumatic circuits.

It prevents uncontrolled movements of the pneumatic components under the impact of full operating pressure.

- Eas and quick installation of mounting kit
- Suitable for direct wall mounting
- Modern design
- Version with NPTF thread

The right to introduce technical modifications is reserved

For table of contents see 5.00.001E

Dimensions (mm)

Type: CDA-1/2

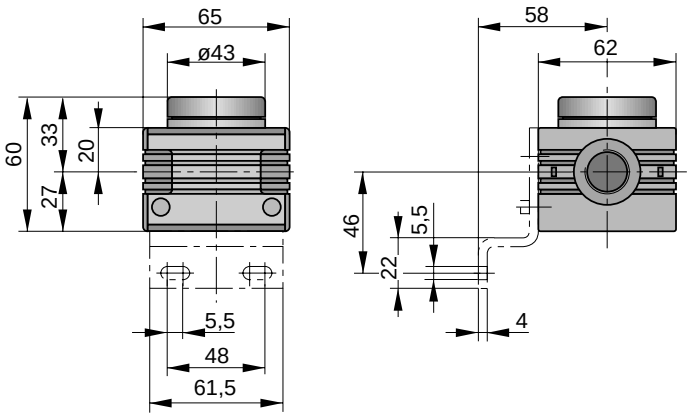

Order Instructions

Description	Port size	**Type**	**Order No.**
Soft start valve	G3/8	**CDA-3/8**	**PB 57249-100**
Soft start valve	G1/2	**CDA-1/2**	**PB 57349-100**

Accessories

Description	**Order No.**
Mounting kit	**PL 17518**
Coupling kit	**PL 17608**
Adapter kit G3/4	**PL 17682**

Pressure Regulating Valve

G1/8, G1/4

for panel mounting

airfit

MRS

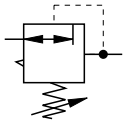

Characteristics			Pressures quoted as gauge pressure	
System			Piston-type pressure regulating valve (pilot operated) with secondary pressure relief	
Type			**MRS-06**	**MRS-08**
Port size			**G1/8**	**G1/4**
Installation			In-line mounting with bracket or panel mounting (Ø30.3$^{+0.2}$ mm to DIN 43696)	
Medium and ambient temperatures	ϑ_{min} ϑ_{max}	°C °C	0 +60	(further temperatures on request)
Weight (mass)		kg	0,18	
Pneumatic Characteristics				
Operating pressure range - inlet pressure	$p_{1\,min}$ $p_{1\,max}$	bar bar	0 10	
Operating pressure range - outlet pressure	$p_{2\,min}$ $p_{2\,max}$	bar bar	0.5 on request 8	0.5 3
Min. pressure difference	p_1-p_2	bar	0.2	
Hysteresis p_1=10/p_2=0 Hysteresis p_1=10/p_2=8		bar bar	1.6 0.6	
Recommended flow [1]	Q_n	l/min m³/h	**300** **18**	**550** **33**
max. flow[2]	Q_{max}	l/min m³/h	350 33	585 35

[1] at 6.3 bar and 25 m/s
[2] at p_1 = 10 bar and p_2 = 6,3 bar, Δp = 1 bar
[3] By the use of special springs, the outlet pressure can be precisely regulaten the specified p_2 range.

A1P436E00KY00X

Flow Characteristics

Type: MRS-08

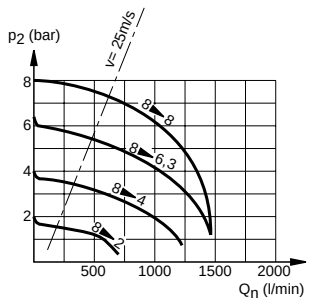

Outlet Pressure Variation with Fluctuating Inlet Pressure

Type: MRS-08

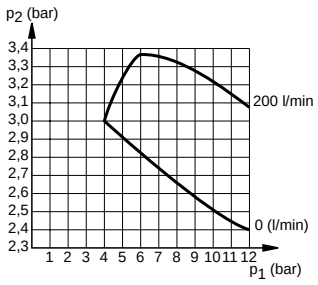

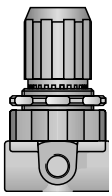

Piston-type pressure regulating valve (pilot operated) with secondary pressure relief - Handwheel lockable

- Mounting ring included
- Robust brass housing with glassfibrereinforced polymer upper body for hard use

The right to introduce technical modifications is reserved

For single units see 5.09.004E-5.09.008E
For air preparation units see 5.09.002E, 5.09.003E
For product group list see 5.09.001E

HOERBIGER ORIGA

Accessories

Gauge
Ø 40, 0-10 bar

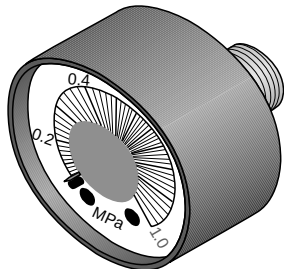

Order No.: KZ 8891

Accessories

Gauge for panel mounting
Ø 40, 0-10 bar

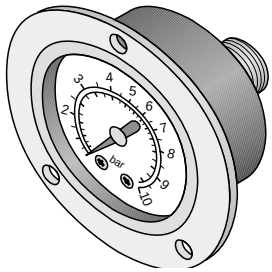

Order No.: KZ 8822

Accessories

Mounting bracket

Order No.: PL 15531

Dimensions (mm)

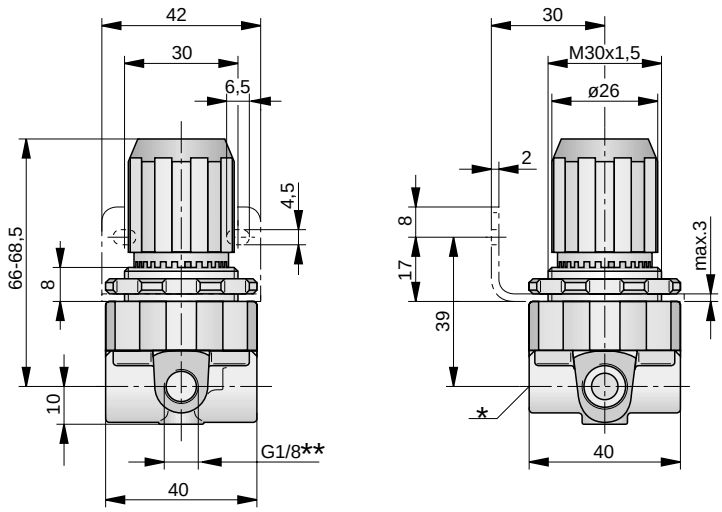

* On delivery the plug is not assembled.
** Two opposite gauge ports G1/8

Order Instructions

Description	Port size	**Type**	**Order No.**
06	G1/8	**MRS-06**	**PB 21749-010**
08	G1/4	**MRS-08**	**PB 21649-010**

Accessories

Description	**Order No.**
Gauge, Ø 40, 0-10 bar	**KZ 8891 (airfit light design)** **KZ 8813 (neutral)**
Gauge for panel mounting Ø 40, 0-10 bar	**KZ 8822**
Mounting bracket	**PL 15531**
Regulator spring for operating pressure 3 bar	**PL 15876**
Regulator spring for operating pressure 4 bar	**PL 16776**
Mounting ring for sheet thickness 6 mm (hole Ø 36.5 - 38 mm)	**PL 16198**
Mounting ring for sheet thickness 8 mm (hole Ø 36.5 - 38 mm)	**PL 15925**

Pressure Relief Valve

G1/8, G1/4, G3/8

Characteristics			Pressures quoted as gauge pressure		
System			Pressure limiting valve with adjustable opening pressure for venting of large air volumes (full flow)		
Type			**SR-1/8E**	**SR-1/4E**	**SR-3/8E**
Port size			**G1/8**	**G1/4**	**G3/8**
Installation			beliebig		
Medium and ambient temperatures	ϑ_{min} ϑ_{max}	°C °C	0 +60	(further temperatures on request)	
Weight (Masse)		kg	0,3		
Pneumatic Characteristic					
Operating pressure range	$p_{1\,min}$ $p_{1\,max}$	bar bar	0 8 – 4 – according to the type		

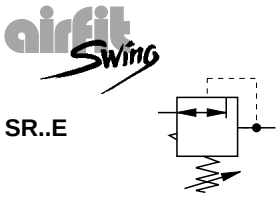

– for Series Airfit Swing

Exhaust Flow

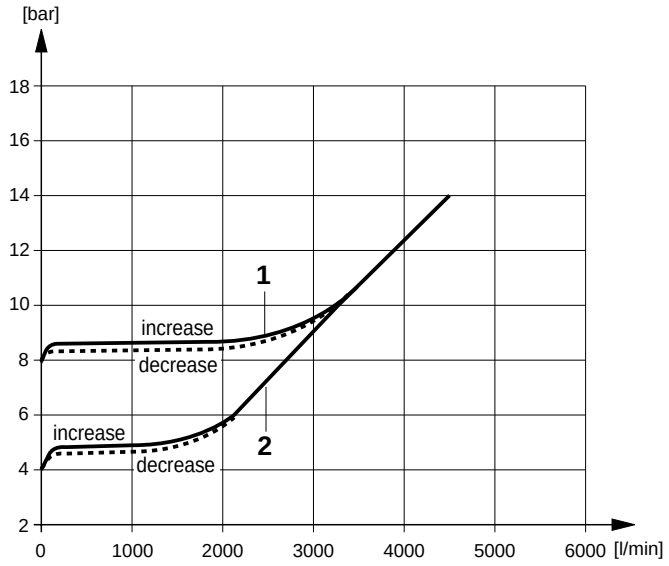

1 = Version 0 – 8 bar
2 = Version 0 – 4 bar

Installation

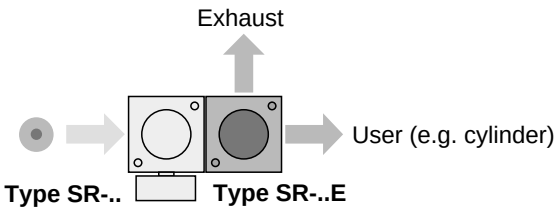

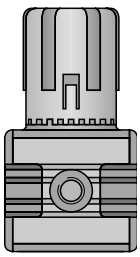

- can be screwed directly into air line
- Version with NPTF thread
- colour and print can be customer-specific
- Pressure limiting valve with adjustable opening pressure for venting of large air volumes (full flow)

For single units see 5.12.004E-5.12.008E
For air preparation units see5.12.002E-5.12.003E
For product group list see 5.12.001E

Data Sheet No. 5.95.022E-1

A1P484E00DY00X

The right to introduce technical modifications is reserved

HOERBIGER ORIGA

Dimensiones (mm)

Type: SR-1/8E, 1/4E, 3/8E

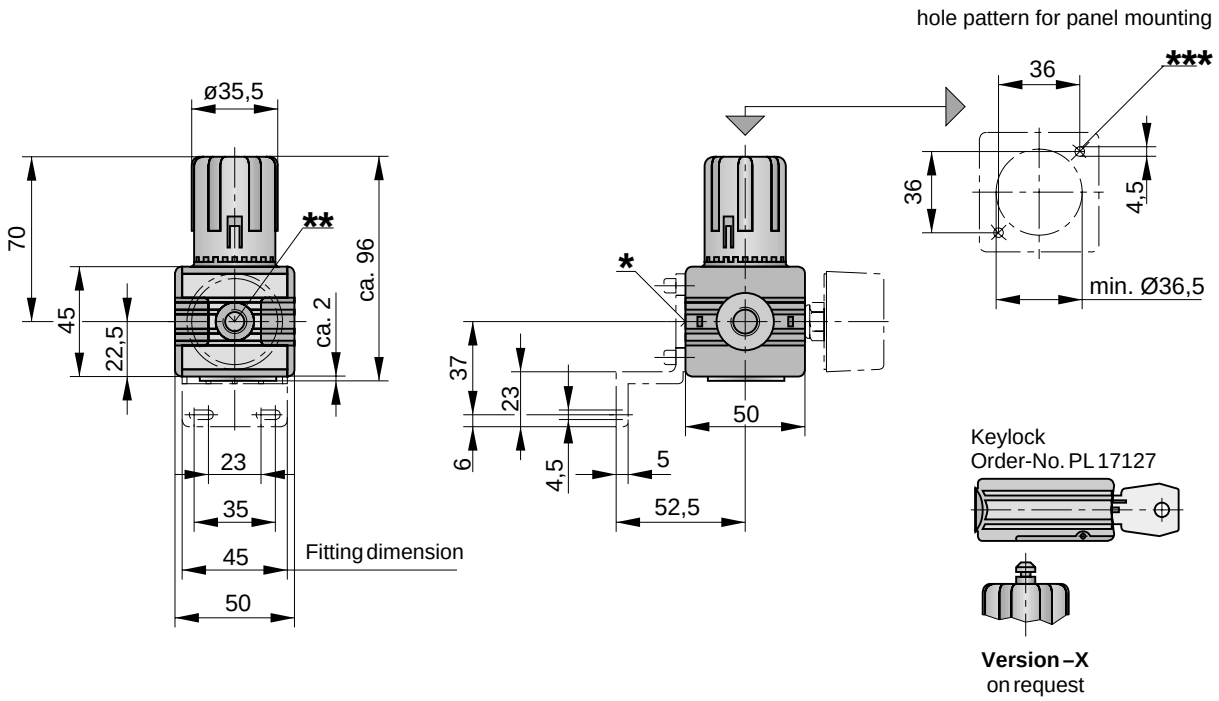

* On delivery the plug is not assembled
** Two opposite gauge ports G1/8
*** for self-tapping screw …, screw depth max. 10 mm

Order Instructions

Pressure range *	Port size	**Type**	**Order No.**
0 – 8 bar	G1/8	**SR-1/8E**	**PB 45349-150**
	G1/4	**SR-1/4E**	**PB 45449-150**
	G3/8	**SR-3/8E**	**PB 45549-150**
0 – 4 bar	G1/8	**SR-1/8E**	**PB 45349-151**
	G1/4	**SR-1/4E**	**PB 45449-151**
	G3/8	**SR-3/8E**	**PB 45549-151**

*** other pressure ranges on request**

Accessories

Description	**Order No.**
Gauge Ø 40, 0-10 bar, G1/8 *)	**KZ 8891**
Mounting kit	**PL 16965**
Coupling kit	**PL 16959**

PNEUMATIC
GROUP

ELECTRONICALLY CONTROLLED PRESSURE REGULATING VALVE (PROPORTIONAL PRESSURE REGULATING VALVE)

airfit control

HOERBIGER
ORIGA

Description	Abb.	Port size	Recommended flow (l/min)*	**Type**	Data Sheet No.
airfit tecno Proportional pressure 0-10 V		G1/8	115 (Nominal flow)	**PRE-U**	5.96.002E
airfit tecno Proportional pressure 4-20 mA		G1/8	115 (Nominal flow)	**PRE-I**	5.96.002E
airfit control Proportional pressure 0-8 V	discontinued	G1/4 G3/8 G1/2	550 (3000*) 850 (6000*) 1900 (6000*)	**XRE 3-1/4** **XRE 3-3/8** **XRE 3-1/2**	5.96.003E
airfit control Proportional pressure 0-16 mA		G1/4 G3/8 G1/2	550 (3000*) 850 (6000*) 1900 (6000*)	**XRE 3-1/4** **XRE 3-3/8** **XRE 3-1/2**	5.96.003E
airfit control Proportional pressure 0-10 V normally closed normally open		G1/4 G3/8	550 (2200*) 850 (2500*)	**SRE-U-1/4** **SRE-U-3/8**	5.96.004E
airfit control Proportional pressure 4-20 mA		G1/4 G3/8	550 (2200*) 850 (2500*)	**SRE-I-1/4** **SRE-I-3/8**	5.96.004E
airfit control Proportional pressureil 0-20 mA		G1/4 G3/8	550 (2200*) 850 (2500*)	**SRE-I-1/4** **SRE-I-3/8**	5.96.004E
airfit control Proportional pressure 0-10 V normally closed normally open		G3/8 G1/2	850 (4500*) 1900 (6000*)	**CRE-U-3/8** **CRE-U-1/2**	5.96.005E
airfit control Proportional pressure 4-20 mA		G3/8 G1/2	850 (4500*) 1900 (6000*)	**CRE-I-3/8** **CRE-I-1/2**	5.96.005E
airfit control Proportional pressure 0-20 mA		G3/8 G1/2	850 (4500*) 1900 (6000*)	**CRE-I-3/8** **CRE-I-1/2**	5.96.005E

* Max. flow at p_1 = 10 bar to p_2 = 6,3 bar, Δp = 1 bar

A3P126E71EAA00X

The right to introduce technical modifications is reserved

Pressure Regulating Valve

G1/8, NW2.5

Electronically controlled (proportional pressure regulating valve with piezo pilot)

airfit tecno

PRE-.

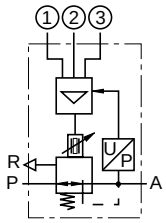

Versions

- Voltage controlled (Type PRE-U)
- Current controlled (Type PRE-I)
- 3 pressure ranges
- Option: actual value output
- Option: EMV-mass

Electronically controlled pressure regulating valve with actual value feed-back.
The unit is highly adaptable to prevailing operating conditions.
Remote controlled.

Characteristics to VDI 3292			Pressures quoted as gauge pressure		
System			Diaphragm-pressure regulating valve pilot operated with piezo pilot and pneumatic and electronic feedback		
Type			**PRE-.**		
Mounting			Flange		
Port size			NW 2.5 without base plate G1/8 with base plate		
Installation			In any position		
Weight (mass)		kg	0.145 without base plate 0.180 with base plate		
Flow direction			On: from 1 to 2 Out: from 2 to 3		
Medium and ambient temperatures	ϑ_{min} ϑ_{max}	°C °C	0 +50		
Medium			dried, filtered air (30µ)		
Lubrication			No or only little oil mist lubrication (max. 30mg/m³)		
Pneumatic Characteristics					
Inlet pressure range	p_{1min} p_{1max}	bar bar	1.5 10		
Outlet pressure range	p_{2min} p_{2max}	bar bar	0 (1 8	0 2	0 0.2
Nominal flow	Q_N	l/min	200		
Maximum flow (3	Q_N	l/min	350		
Hysteresis	Δp_2	%	<0.2	<0.2	<0.5
Repeatability	Δp_2	%	<0.2	<0.2	<0.5
Sensitivit	Δp_2	%	<0.1	<0.1	<0.5
Linearity	p_{2max}	%	<0.5	<0.5	<1
Electrical Characteristics					
Nominal voltage	U_N	V DC	24 = ± 10 %		
Nominal power	P_N	W	0.25		
Residual ripple		%	10		
Current consumption (2	I_{Bmax}	mA	10		
Command signal input	W		Type: PRE-U	Type: PRE-I	
Version 0 – 8 bar			0 V → 0 bar 8 V → 8 bar	4 mA → 0 bar 20 mA → 8 bar	
Version 0 – 2 bar			0 V → 0 bar 10 V → 2 bar	4 mA → 0 bar 20 mA → 2 bar	
Version 0 – 0,2 bar			0 V → 0 bar 10 V → 0.2 bar	4 mA → 0 bar 20 mA → 0.2 bar	
Input resistance	R_E	kΩ Ω	61.5 0-10 V Version 550 4-20 mA Version		
Electrical protection		IP	IP52 to DIN 45322		
Connection			3-pole Plug M8 or to DIN 43650-1 C		

(1 other pressure ranges on request
(2 0 – 10 V version
(3 at p1 = 10 bar and p2 = 6.3 bar, Δp = 1 bar

A1P513E00EAAU0X

The right to introduce technical modifications is reserved

HOERBIGER ORIGA

Sensitivity

The smallest change in the electronic input signal which leads to a change in actual output pressure is referred to as sensitivity. This is expressed as a percentage of maximum output pressure. For the Tecno this value is < 0.1% to < 0.5% depending on the version.

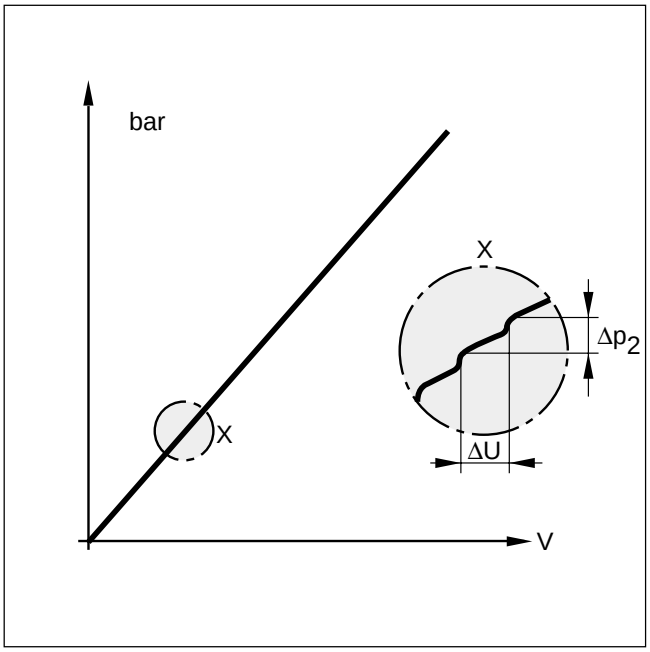

Linearity

The ideal curve showing output pressure in relation to electronic signal would be a straight line. Linearity is the maximum deviation from the straight line, expressed as a percentage of maximum output pressure.

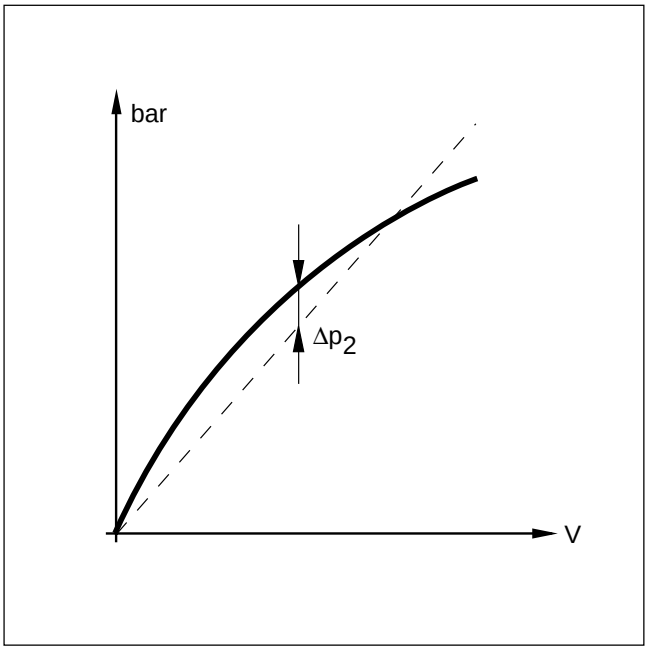

Hysteresis

The same electronic signal generates slightly different actual output pressures, depending on whether the previous signal was higher or lower. This difference, known as hysteresis, is caused by friction and temporary deformation of elastic components.
The hysteresis of the electronically operated pressure regulating valve **AIRFIT tecno** from HOERBIGER is between < 0.2 % and < 0.5 % of the output pressure.

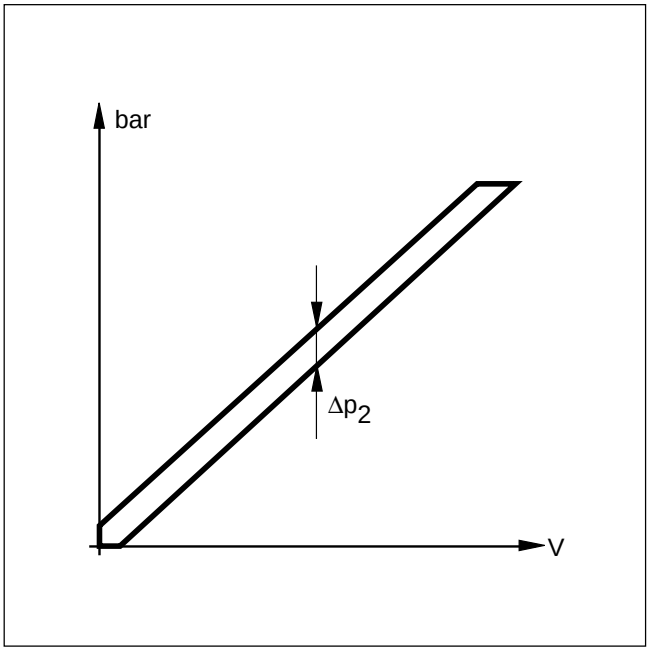

Repeatability

Control components, for a given set value, usually produce repeated actual values which differ less from each other than from the absolute set value, because the relatively large linearity deviation is excluded.

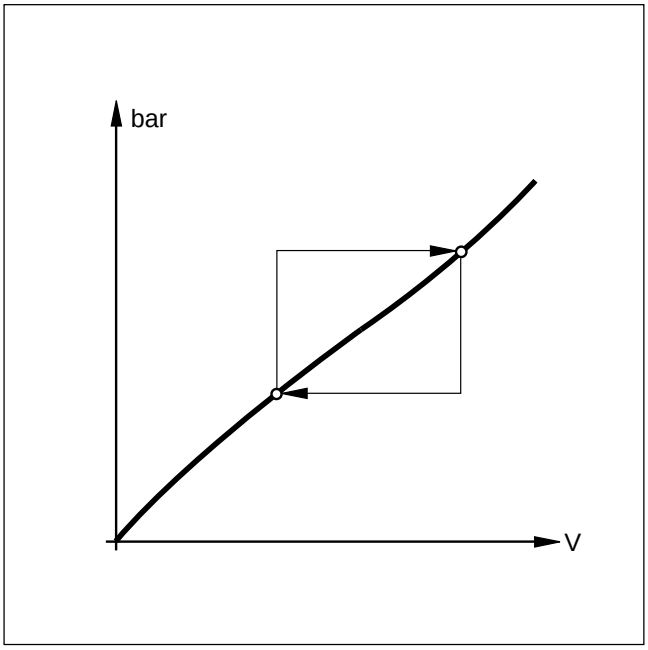

Adjustment

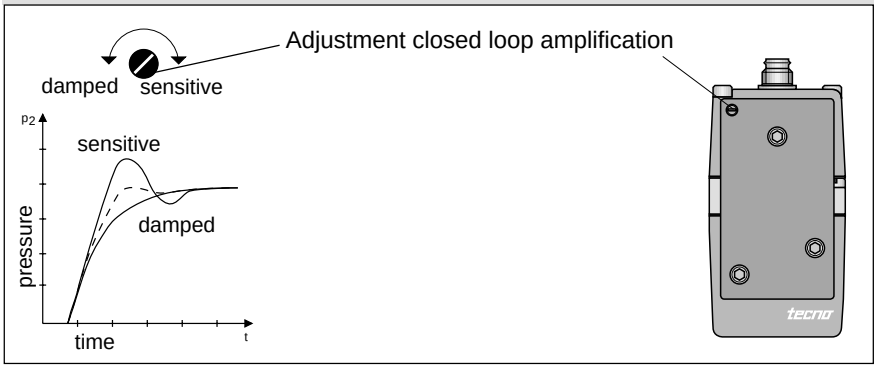

Examples of Connections – Voltage controlled 0-10 V

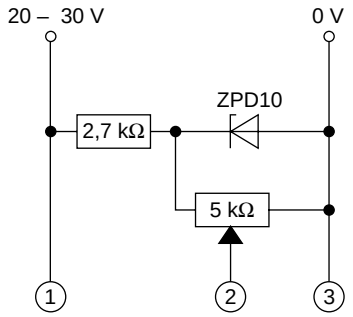

Connection Diagram for plug to 43650-1C

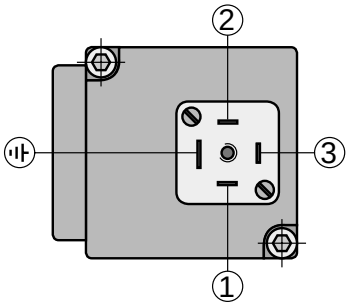

Voltage input 0-10 V
Type PRE–U with actual value output
1 = Power supply 24 V DC
2 = Set value 0-10 V
3 = actual value output
1,25 V (0 bar output) –
6,25 V (p_{max} output)
⏚ GND

Voltage input 0-10 V
Type PRE–U with EMV- mass
1 = Power supply 24 V DC
2 = Set value 0-10 V
3 = Mass 0 V DC
⏚ EMV-mass

Current input 4-20 mA
Type PRE–I –I with EMV- mass
1 = None
2 = 4-20 mA, +
3 = 4-20 mA, –
⏚ EMV-mass

Connection Diagram for 3-pole plug

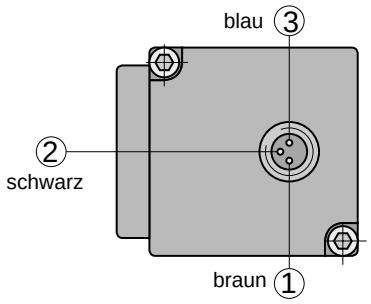

Voltage input 0-10 V
Type PRE–U
1 = Power supply 24 V DC / 10 mA
2 = Set value 0-10 V
3 = Ground 0 V

Current input 4-20 mA
Type PRE–I
(two wire technology)
1 = None
2 = 4-20 mA, +
3 = 4-20 mA, –

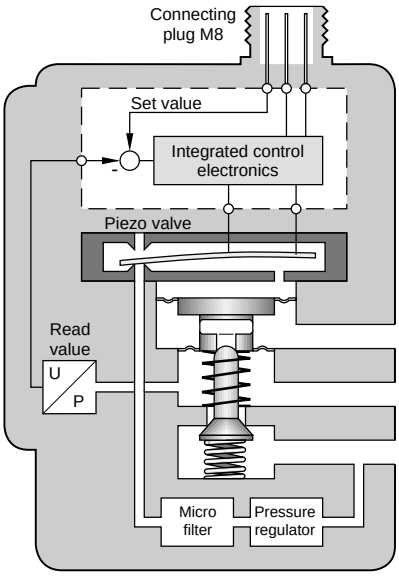

3 (R) Exhaust

2 (A) Outlet

1 (P) Pressure supply

How it Works

The actuating element in the **tecno valve** is not a solenoid system, as in conventional proportional pressure regulating valves, but a piezo valve – an encapsulated Piezo-ceramic element based on the jet-and- baffle principle.

The piezo valve makes use of the Piezo effect: the Piezo-ceramic element bends when a voltage is applied to it.

A built-in electronic control system applies variable voltage to the element, producing variable bending and therefore variable pressure on the diaphragm in the pilot chamber. Diaphragm movement is transferred to the main valve by a plunger acting against a spring.

The pressure thus produced at the valve outlet is compared via a sensor with the preset value and if necessary corrected by the electronic control system.

Dimensions (mm)
Single Base Plate G1/8

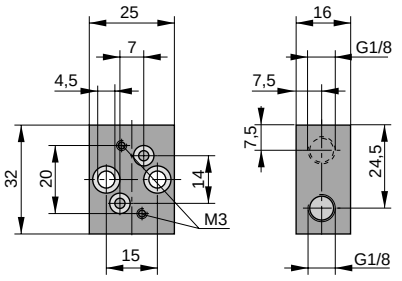

Dimensions (mm)
Multiple Base Plate G1/8

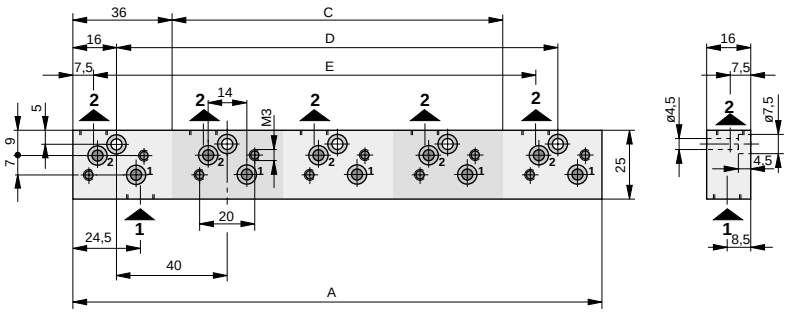

Table of dimensions (mm) and Weight (mass)
Multiple Base Plate G1/8

Number of valves	Dimensions (mm) A	C	D	E	Weight (mass) (kg)
2	72	0	40	40	0,07
3	112	40	80	80	0,11
4	152	80	120	120	0,15
5	192	120	160	160	0,19
6	232	160	200	200	0,23

Dimensions (mm)
Version with 3-pole connector and base plate

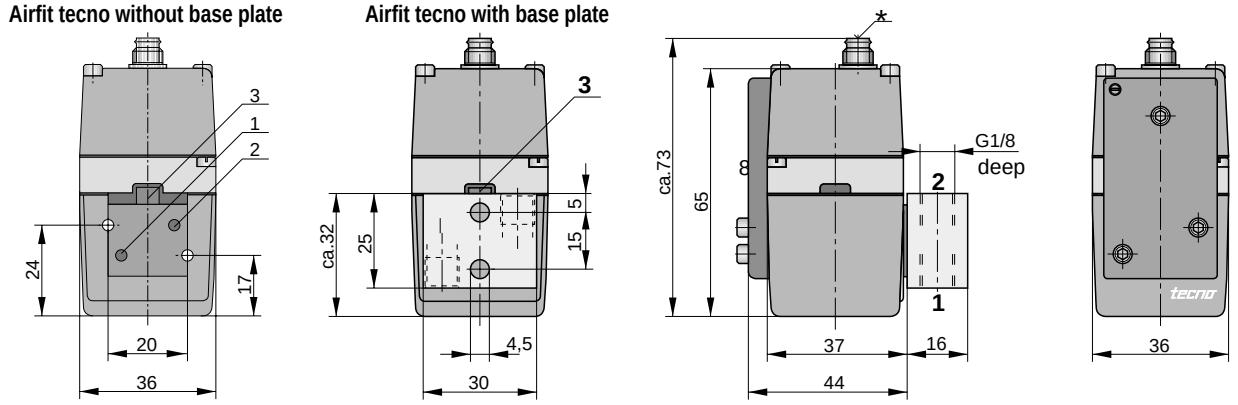

* Connection for 3-pole Plug M8 (KC3104, KC3106)

Dimensions (mm)
Version with plug to DIN 43650-1C and base plate

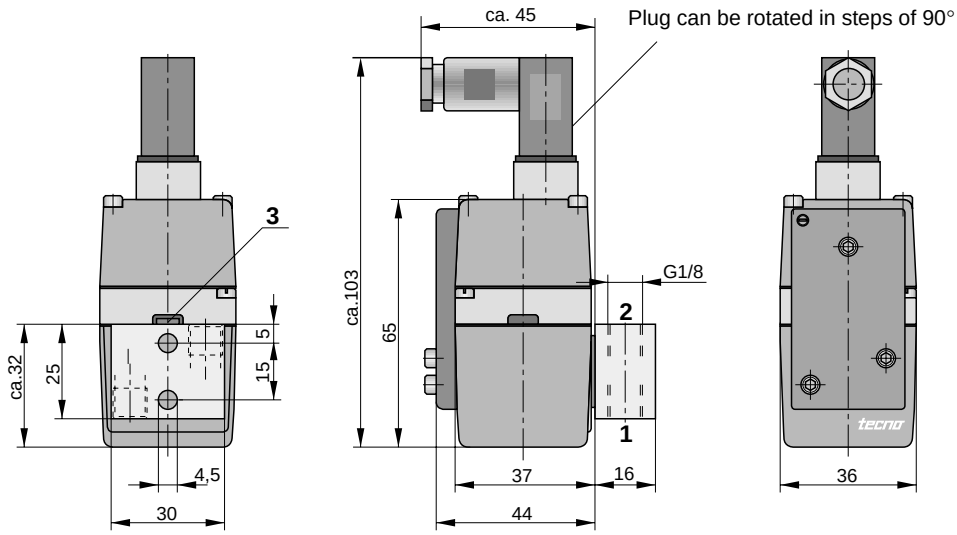

Order Instructions

Version	Order instructions Type	Order No.
Sets, complete, (0-8 bar) consisting of		
Prop.-Pressure Regulating Valve, 0 – 10 V Base Plate G1/8, Cable Set straight (2m)	**PRE-U-01**	**PS11140-B-01**
Prop.-Pressure Regulating Valve, 0 – 10 V Base Plate G1/8, Cable Set bended (2m)	**PRE-U-01**	**PS11150-B-01**
Prop.-Pressure Regulating Valve, 4 – 20 mA Base Plate G1/8, Cable Set straight (2m)	**PRE-I-01**	**PS11141-B-01**
Prop.-Pressure Regulating Valve, 4 – 20 mA Base Plate G1/8, Cable Set bended (2m)	**PRE-I-01**	**PS11151-B-01**

Prop.-Pressure Regulating Valve NW 2.5 (without accessories)		
Prop.-Pressure Regulating Valve, 0 – 10 V, 0 – 8 bar	**PRE-U**	**PS11110-B**
Prop.-Pressure Regulating Valve, 4 – 20 mA, 0 – 8 bar	**PRE-I**	**PS11111-B**
Prop.-Pressure Regulating Valve, 0 – 10 V, 0 – 2 bar	**PRE-U**	**PS11130-B-20**
Prop.-Pressure Regulating Valve, 4 – 20 mA, 0 – 2 bar	**PRE-I**	**PS11139-B-20**
Prop.-Pressure Regulating Valve, 0 – 10 V, 0 – 200 mbar	**PRE-U**	**PS11130-B-02**
Prop.-Pressure Regulating Valve, 4 – 20 mA, 0 – 200 mbar	**PRE-I**	**PS11139-B-02**

Accessories		
Single Base Plate G1/8		**PS11112-A-01**
Multiple Base Plate G1/8 for 6 valves max.		**PS11112-A-..****
Cable Set straight (5 m)		**KC3104**
Cable Set bended (5 m)		**KC3106**

Prop.-Pressure Regulating Valve NW 2.5 with actual value output and plug to DIN 43650-1C (single units without accessories) *		
Prop.-Pressure Regulating Valve, 0 – 8 V, 0 – 8 bar, Actual Value Output 1.25 V (0 bar) – 6.25 V (8 bar)	**PRE-U**	**PS11113-B**
Prop.-Pressure Regulating Valve, 0 – 10 V, 0 – 2 bar, Actual Value Output 1.25 V (0 bar) – 6,25 V (2 bar)	**PRE-U**	**PS11162-B-20**
Prop.-Pressure Regulating Valve, 0 – 10 V, 0 – 0.2 bar, Actual Value Output 1.25 V (0 bar) – 6.25 V (0.2 bar)	**PRE-U**	**PS11162-B-02**

Prop.-Pressure Regulating Valve NW 2.5 with EMV-mass and plug to DIN 43650-1C (single units without accessories) *		
Prop.-Pressure Regulating Valve, 0 – 10 V, 0 – 8 bar	**PRE-U**	**PS11164-B**
Prop.-Pressure Regulating Valve, 0 – 10 V, 0 – 2 bar	**PRE-U**	**PS11165-B-20**
Prop.-Pressure Regulating Valve, 0 – 10 V, 0 – 0.2 bar	**PRE-U**	**PS11165-B-02**
Prop.-Pressure Regulating Valve, 4 – 20 mbar, 0 – 8 bar	**PRE-I**	**PS11168-B**
Prop.-Pressure Regulating Valve, 4 – 20 mbar, 0 – 2 bar	**PRE-I**	**PS11169-B-20**
Prop.-Pressure Regulating Valve, 4 – 20 mbar, 0 – 0.2 bar	**PRE-I**	**PS11169-B-02**

*Cable KC3104, KC3106 is not required

** Number of valves (max. 6) – Order example: PS11112-A-06

Pressure Regulating Valve

G1/4-G1/2

Electronically controlled (proportional pressure regulating valve)

airfit control

Characteristics to VDI 3292			Pressures quoted as gauge pressure		
System			Piston-type pressure regulating valve pilot operated with pneumatic and electronic feedback		
Type			**XRE 3-1/4 XRES 3-1/4**	**XRE 3-3/8 XRES 3-3/8**	**XRE 3-1/2 XRES3-1/2**
Port size			**G1/4**	**G3/8**	**G1/2**
Installation			Vertical		
Weight (mass)		kg	1.25 (XRES 1.4)		
Medium and ambient temperatures	ϑ_{min} ϑ_{max}	°C °C	0 +40		
Medium			Filtered, lubricated or oil-free compressed air		
Lubrication			Nitrile rubber compatible oil mist lubrication		
Pneumatic Characteristic					
Nominal pressure	p_n	bar	6.3		
Inlet pressure range	p_{1min} p_{1max}	bar bar	0.5 16		
Outlet pressure range	p_{2min} p_{2max}	bar bar	0.5 10		
Nominal flow*	Q_N	l/min m³/h	**3000 180**	**6000 360**	**6000 360**
Recommended flow**	Q	l/min m³/h	**550 33**	**850 51**	**1900 114**
Hysteresis**	p_{2max}	%	<0.5		
Repeatability***	p_{2max}	%	<0.5		
Sensitivity***	p_{2max}	%	<0.5		
Linearity***	p_{2max}	%	<1		
Electrical Characteristic					
Nominal Voltage	U_N	V DC	24 V = ± 10 %		
Residual ripple		%	10		
Power consumption	I_{Bmax}	A	0.4 (depending on initial pressure)		
Set value input	U_W	V	0 to 10 (1 V / 1 bar) (and 0-20 mA)****		
Input resistance	R_E	kΩ	200		
Actual value output	U_X	V	0-8 (1 V/bar)		
Output current	I_{Amax}	mA	20		
Reference output	U_R	V	10 (fix)		
Output current	I_{Rmax}	mA	20		
Electrical protection		IP	IP65 to DIN 40050, EN 60529		

* at p_1 = 10bar and p_2 = 6.3bar , Δp = 1bar
** at 6.3 bar and 25 m/s
*** see explanation on page 2
**** by installation of a 500 Ω and the respective adjusting

XRE 3 - ..

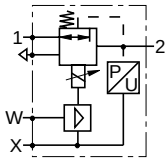

XRES 3-..

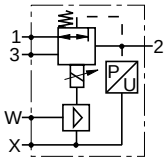

Electronically controlled pressure regulating valve with actual value feedback. The unit is highly adaptable to prevailing operating conditions. Remot controlled.

HOERBIGER ORIGA

For further information see brochure A3P117E
For table of contents see 5.00.001E

Data Sheet No. 5.96.003E-1

2000 – discontinued

A1P588E00EAA00X

The right to introduce technical modifications is reserved

Flow Characteristics Type: XRE 3-1/2

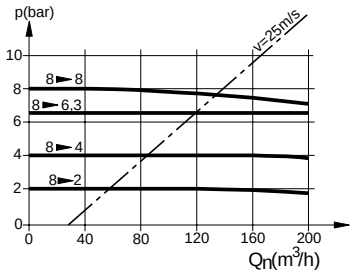

Output Pressure as Function of Input Voltage

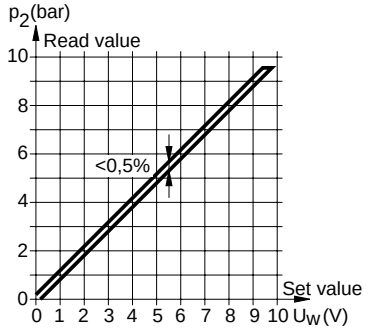

Accessories

Mounting kit, consisting of mounting bracket and 4 mounting screws

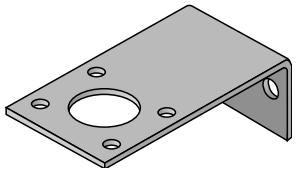

Order No.: PL 16247

Connection Diagram

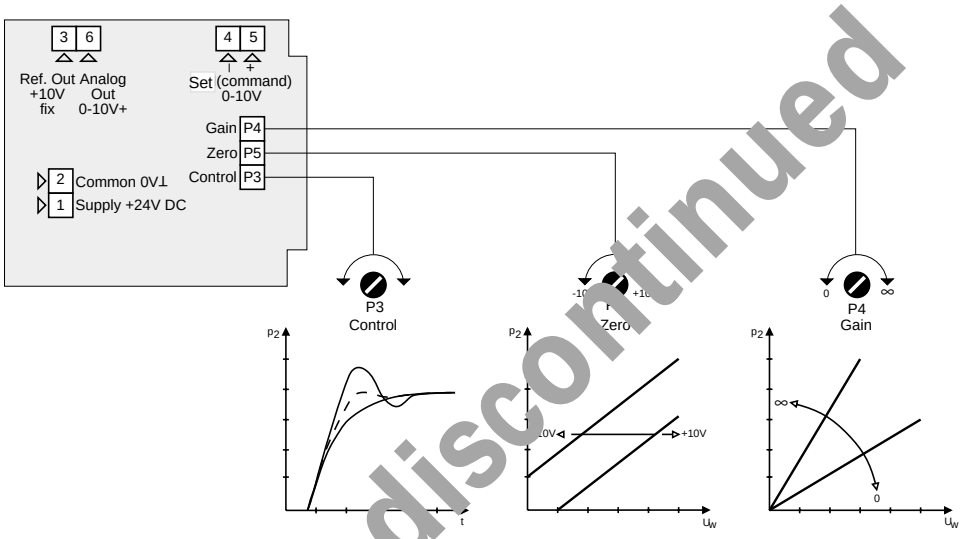

2000 – discontinued

Control Options

Analog voltage

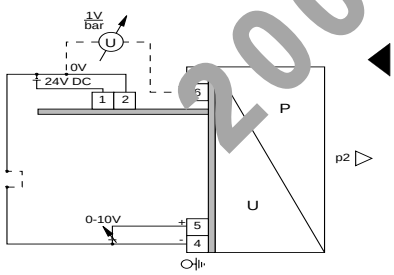

◀ The negative pole of the set value need not, but can, have the zero potential of the power supply

The resistance of the potentiometer should range between 500 Ω and 100 kΩ ▶

with a single potentiometer

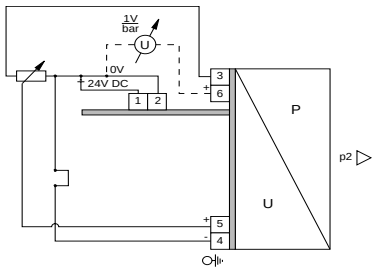

SPS in connection with several potentiometers

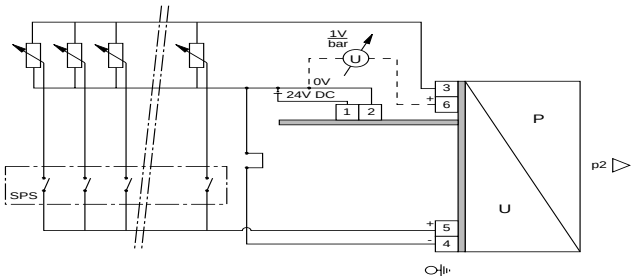

The total resistance of the potentiometer series should not be less than 500 Ω

Sensitivity

The smallest deviation from set output pressure which leads to a change in actual output pressure is referred to as sensitivity and this is expressed as a percentage of maximum output pressure. Sensitivity of the XRE II valve is below 0.5%, which allows output pressure to be set very precisely.

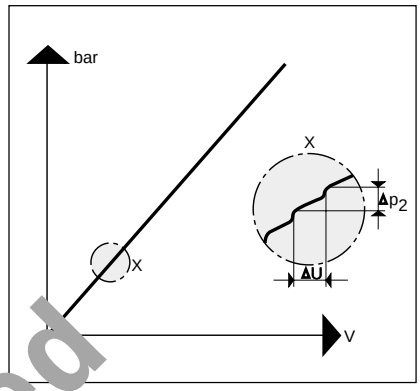

Linearity

The ideal curve showing output pressure in relation to electronic signal would be a straight line. Linearity is the maximum deviation from the straight line expressed as a percentage of maximum output pressure, and is below 1% for the XRE II valve.

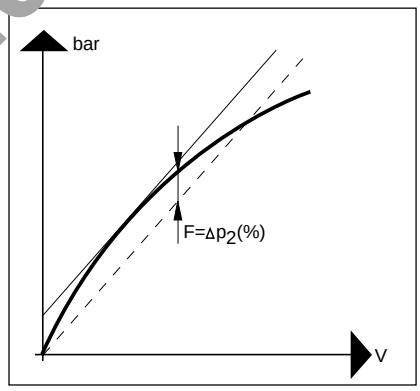

Hysteresis

The same set output pressure generates slightly different actual output pressures, depending on whether the previous setting was higher or lower. This differences, known as hysteresis, is caused by friction and temporary deformation of elastic components. The hysteresis of the XRE II valve is below 0.05 bar.

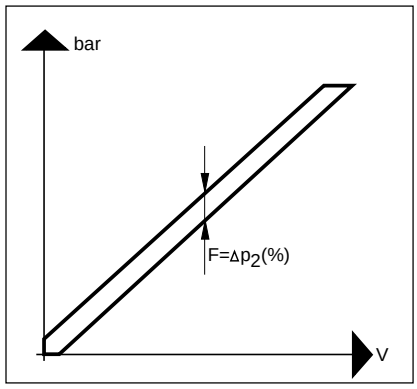

Repeatability

Control components, for a given set value, usually produce repeated actual values which differ less from each other than from the abolute set value, because the relatively large linearity deviation is excluded. Repeatability is improved if hysteresis is minimised.

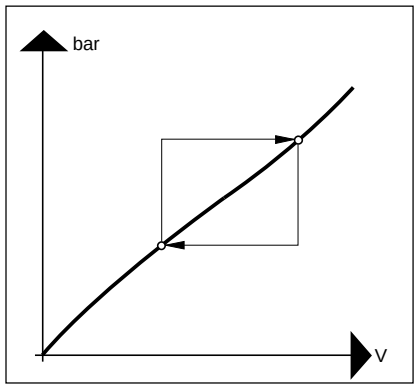

2000 - discontinued

Dimensions (mm)

Type: XRE 3 / XRES 3

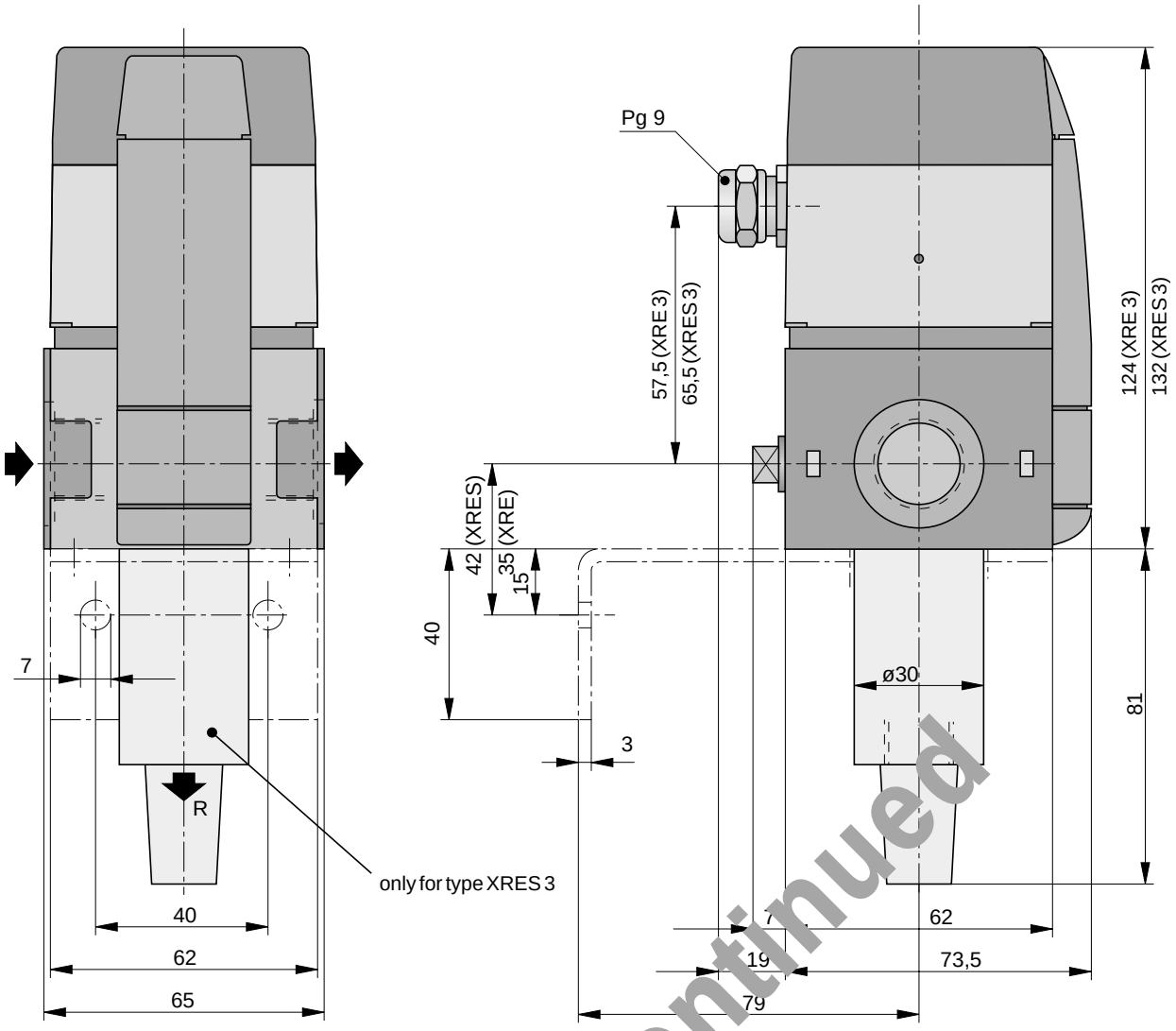

Order Instructions

Type	Port size	max. output pressure (bar)	Order No.
Basic model			
XRE 3-1/4	G1/4	8	**PB 51049-310**
XRE 3-3/8	G3/8	8	**PB 51149-310**
XRE 3-1/2	G1/2	8	**PB 51249-310**
Versions for control 0-16 mA			
XRE 3-1/4	G1/4	8	**PB 51049-320**
XRE 3-3/8	G3/8	8	**PB 51149-320**
XRE 3-1/2	G1/2	8	**PB 51249-320**
Versions for fast pressure relief			
XRES 3-1/4	G1/4	8	**PB 51049-400**
XRES 3-3/8	G3/8	8	**PB 51149-400**
XRES 3-1/2	G1/2	8	**PB 51249-400**
Accessories			
Mounting kit			**PL 16247-11**

2000 – discontinued

Pressure Regulating Valve

G1/4-G3/8

Electronically controlled (proportional pressure regulating valve)

airfit control

SRE-..

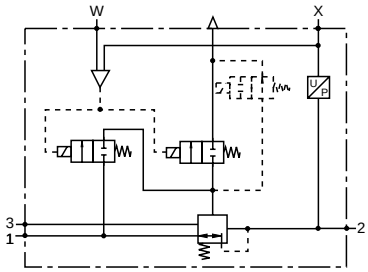

Characteristics to VDI 3292			Pressures quoted as gauge pressures	
System			Piston-type pressure regulating valve, pilot operated, with pneumatic and electric feedback	
Type			**SRE-1/4**	**SRE-3/8**
Port size			**G1/4**	**G3/8**
Installation			In any position	
Weight (mass)		kg	0,6	
Medium and ambient temperature	ϑ_{min} ϑ_{max}	°C °C	0 +50	
Medium			Filtered, lubricated or oil-free compressed air	
Lubrication			Not required	
Pneumatic Characteristics				
Nominal pressure	p_n	bar	6,3	
Inlet pressure range	p_{1min} p_{1max}	bar bar	0 10	
Outlet pressure range	p_{2min} p_{2max}	bar bar	0 10	
Nominal flow*	Q_N	l/min m³/h	**2200** **132**	**2500** **150**
Recommended flow**	Q	l/min m³/h	**550** **33**	**850** **51**
Hysteresis**	p_{2max}	%	<1	
Repeatability***	p_{2max}	%	<0,5	
Sensitivity***	p_{2max}	%	<0,5	
Linearity***	p_{2max}	%	<1	
Electrical Characteristics				
Nominal voltage	U_N	V DC	24 V = ± 10 %	
Residual ripple		%	10	
Power consumption	I_{Bmax}	A	0,15	
Set value input	U_W I	V mA	0 – 10 0 – 20, 4 – 20	
Input resistance	R_E	kΩ	200	
Actual value output	U_X	V	0 – 10	
Output current	I_{Amax}	mA	20	
Electrical protection		IP	IP65 to DIN 40050, EN 60529	

* at p_1 = 10 bar to p_2 = 6,3 bar
** at 6,3 bar and 25 m/s
*** see explanation on page 2

- Electronically controlled pressure regulating valve
- Remote controlled
- Control- and operating pressure from 0 bar
- Airfit design
- Direct coupling with airfit swing units
- No air consumption

HOERBIGER ORIGA

A1P617D00AZ00X

The right to introduce technical modifications is reserved

For table of contents see 5.96.001E

Flow Characteristics Type: SRE-1/4

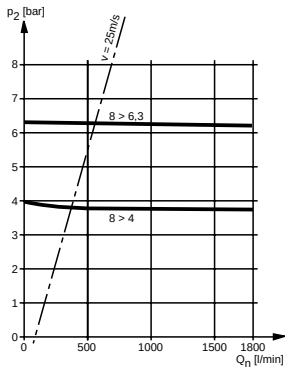

Output Pressure as Function of Input Voltage

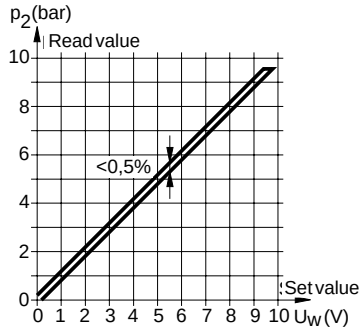

Accessories

Mounting kit

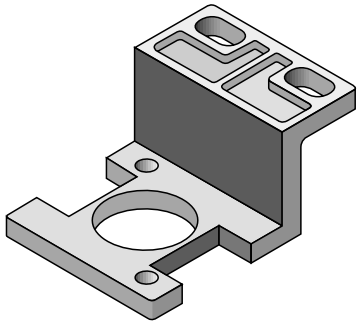

Order no.: PL 16965

Connection Diagram

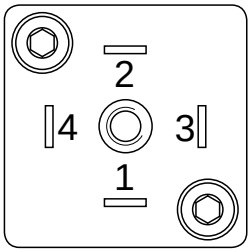

Pin 1: Power supply
Plus +24 V DC ± 10%
0,15 A
Residual ripple 10%

Pin 2: Power supply 0 V
Reference and mass capacity for set- and actual value

Pin 3: Set value input
Positive set value voltage (0-20 mA, 4-20 mA), 0 – 10 V

Pin 4: Analog actual value output. 0 – 10 V for units with 10 bar output pressure.
This output has a max. capacity of 20 mA. The signal voltage is compared to the reference capacity (pin 2)

Accessories

Coupling kit

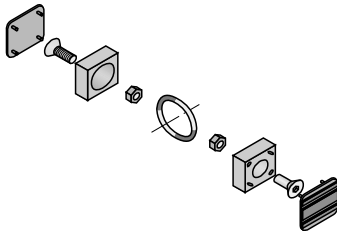

Order No.: PL 16959

Control Options

Analog voltage

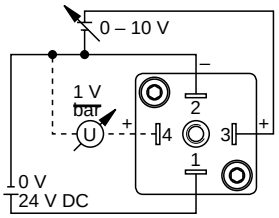

with a single potentiometer

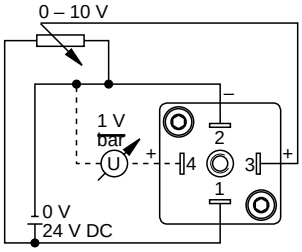

The resistance of the potentiometer should range between 500 Ω and 100 kΩ.

PLC in connection with several potentiometers

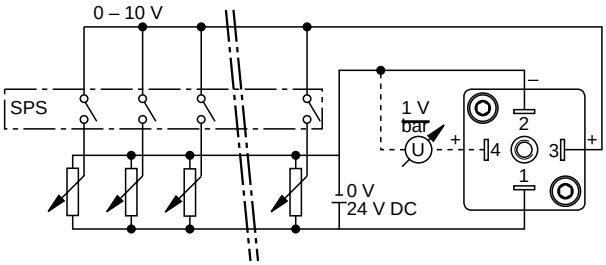

The total resistance of the potentiometer series should not be less than 500 Ω.

Sensitivity

The smallest deviation from set output pressure which leads to a change in actual output pressure is referred to as sensitivity and this is expressed as a percentage of maximum output pressure. Sensitivity of the XRE II valve is below 0.5%, which allows output pressure to be set very precisely.

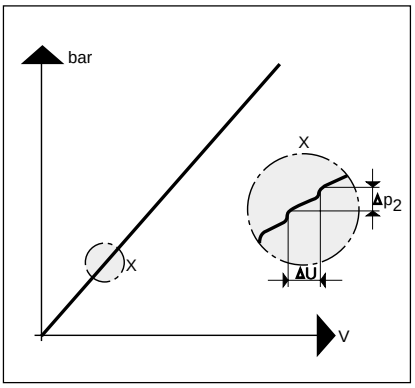

Linearity

The ideal curve showing output pressure in relation to electronic signal would be a straight (linear) line (see dotted line), to predict exactly which pressure can be expected at a given voltage. The deviation can be calculated from the maximal deviation from the straight line, in relation to the highest possible pressure.

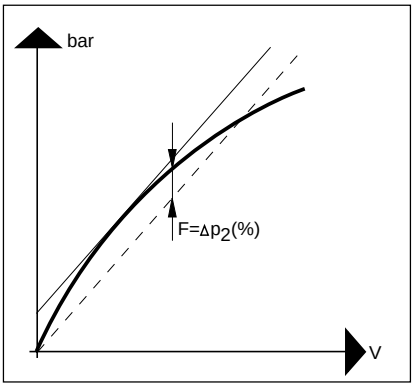

Hysteresis

The same set output pressure generates slightly different actual output pressures, depending on whether the previous setting was higher or lower. This difference, known as hysteresis, is caused by friction and temporary deformation of elastic components. The hysteresis of the SRE valve is below 0.1 bar.

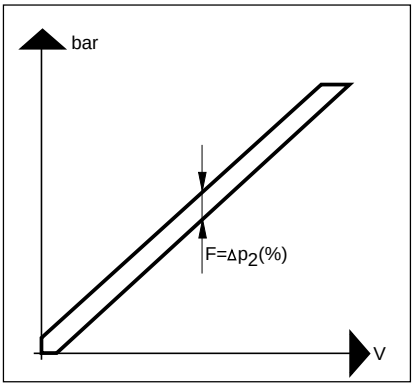

Repeatability

Control components, for a given set value, usually produce repeated actual values which differ less from each other than from the abolute set value, because the relatively large linearity deviation is excluded. Repeatability is improved if hysteresis is minimised.

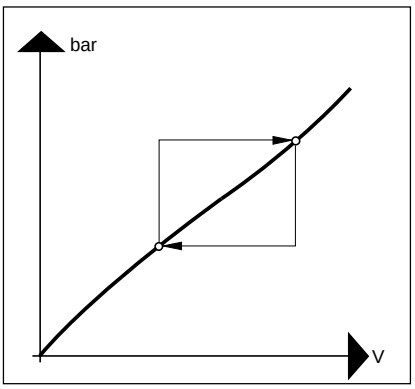

Dimensions (mm)

Type: SRE-1/4

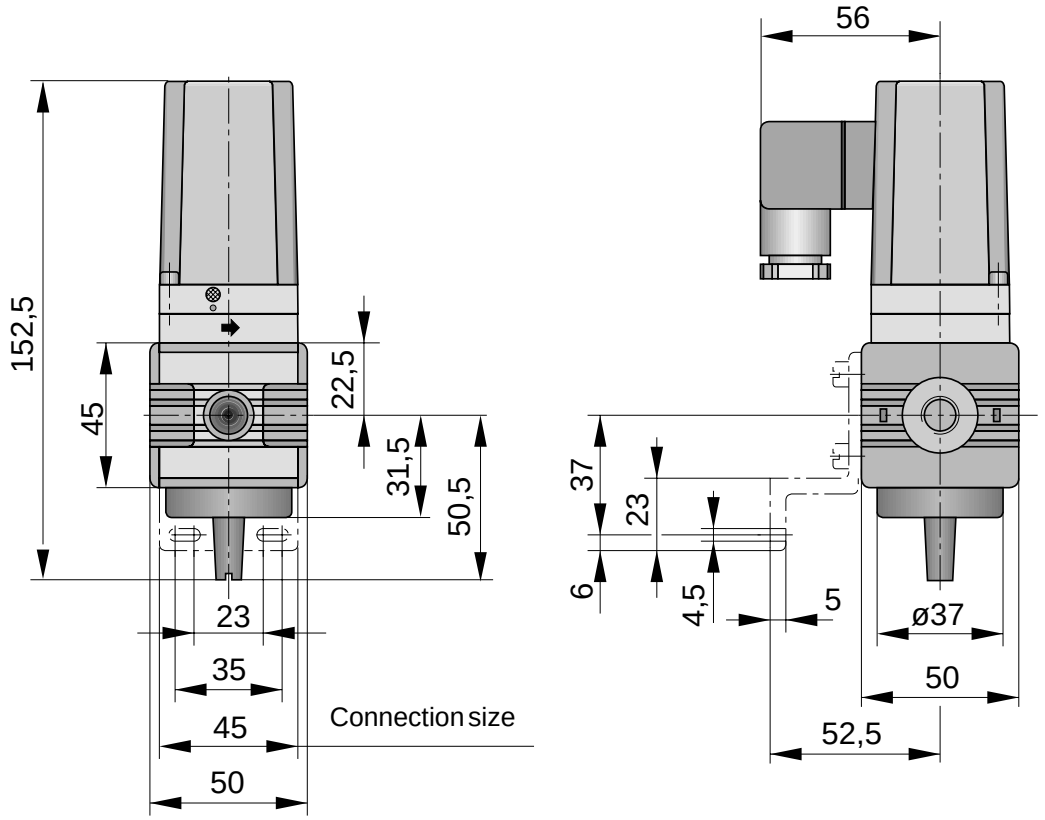

Order Instructions

Port size	max. output pressure (bar)	Type	Order No.
Basic model for control 0– 10 V, NG (normally closed)			
G1/4	10	**SRE-U-1/4 NG**	**PB 59849-000**
G3/8	10	**SRE-U-3/8 NG**	**PB 59949-000**
Version for control 4 – 20 mA			
G1/4	10	**SRE-I-1/4 NG**	**PB 59849-002**
G3/8	10	**SRE-I-3/8 NG**	**PB 59949-002**
Version for control 0 – 20 mA			
G1/4	10	**SRE-I-1/4 NG**	**PB 59849-001**
G3/8	10	**SRE-I-3/8 NG**	**PB 59949-001**
Version for control 0– 10 V, NO (normally open)			
G1/4	10	**SRE-U-1/4 NO**	**PB 59849-010**
G3/8	10	**SRE-U-3/8 NO**	**PB 59949-010**
Accessories			
Mounting kit			**PL 16965**

Pressure Regulating Valve

G3/8-G1/2

Electronically controlled (proportional pressure regulating valve)

airfit control

- to series AIRFIT comfort

CRE-..

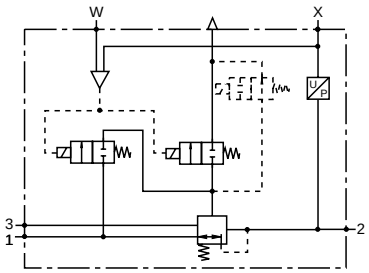

- Electronically controlled pressure regulating valve
- remote controlled
- Control- and operating pressure from 0 bar
- Airfit design
- Version with NPTF-thread
- no air consumption

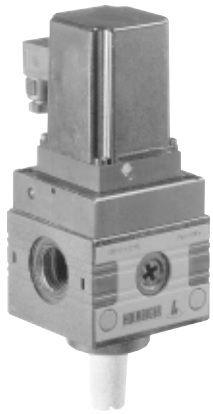

Characteristics to VDI 3292			Pressures quoted as gauge pressures	
System			Piston-type pressure regulating valve, pilot operated, with pneumatic and electric feedback	
Type			**CRE-3/8**	**CRE-1/2**
Port size			**G3/8**	**G1/2**
Installation			In any position	
Weight (mass)		kg	0,95	
Medium and ambient temperature	ϑ_{min} ϑ_{max}	°C °C	0 +50	
Medium			Filtered, lubricated or oil-free compressed air	
Lubrication			Not required	
Pneumatic Characteristics				
Nominal pressure	p_n	bar	6,3	
Inlet pressure range[1)]	p_{1min} p_{1max}	bar bar	0 16	
Outlet pressure range	p_{2min} p_{2max}	bar bar	0 10	
Nominal flow[2)]	Q_N	l/min m³/h	**4500** **270**	**6000** **360**
Recommended flow[3)]	Q	l/min m³/h	**850** **51**	**1900** **114**
Hysteresis[4)]	p_{2max}	%	<1	
Repeatability[4)]	p_{2max}	%	<0,5	
Sensitivity[4)]	p_{2max}	%	<0,5	
Linearity[4)]	p_{2max}	%	<1	
Electrical Characteristics				
Nominal voltage	U_N	V DC	24 V = ± 10 %	
Residual ripple		%	10	
Power consumption	I_{Bmax}	A	0,15	
Set value input	U_W I	V mA	0 – 10 (1V =1bar) 0 – 20, 4 – 20	
Input resistance	R_E	kΩ	200	
Actual value output	U_X	V	0 – 10	
Output current	I_{Amax}	mA	20	
Electrical protection		IP	IP 65 acc. DIN 40050, EN 60529	

1) P1 ≥ P2 + 10 % P2
2) at p_1 = 10 bar to p_2 = 6,3 bar
3) at 6,3 bar and 25 m/s
4) see explanation on page 3

For table of contents see 5.96.001E

A1P666E00CAA00X

The right to introduce technical modifications is reserved

HOERBIGER ORIGA

Flow Characteristics Type: CRE-1/2

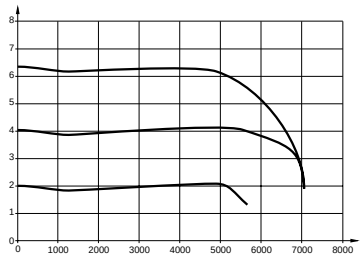

Output Pressure as Function of Input Voltage

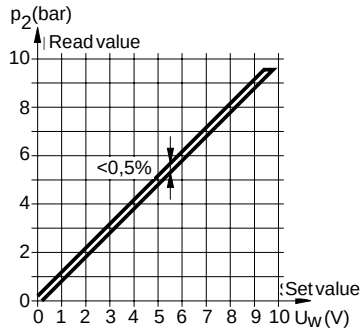

Accessories

Mounting kit

Order no.: PL 17518

Connection Diagram

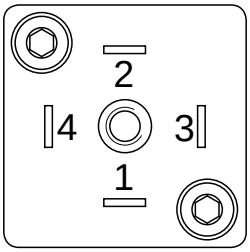

Pin 1: Power supply
Plus +24 V DC ± 10%
0,15 A
Residual ripple 10%

Pin 2: Power supply 0 V
Reference and mass capacity for set- and actual value

Pin 3: Set value input
Positive set value voltage of 0 – 10 V

Pin 4: Analog actual value output. 0 – 10 V for units with 10 bar output pressure.
This output has a max. capacity of 20 mA. The signal voltage is compared to the reference capacity (pin 2)

Accessories

Coupling kit

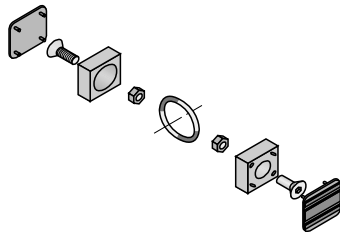

Order No.: PL 17608

Control Options

Analog voltage

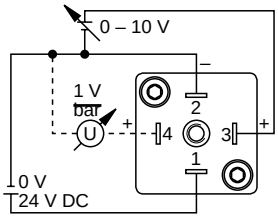

with a single potentiometer

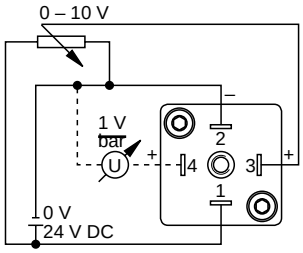

The resistance of the potentiometer should range between 500 Ω and 100 kΩ.

PLC in connection with several potentiometers

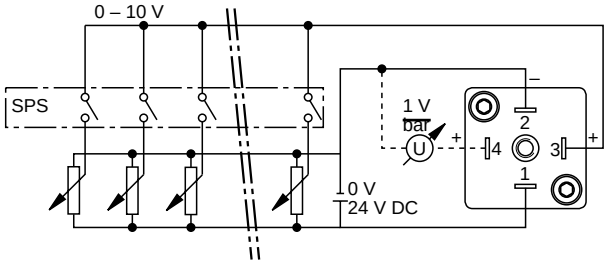

The total resistance of the potentiometer series should not be less than 500 Ω.

Sensitivity

The smallest deviation from set output pressure which leads to a change in actual output pressure is referred to as sensitivity and this is expressed as a percentage of maximum output pressure. Sensitivity of the CRE valve is below 0.5%, which allows output pressure to be set very precisely.

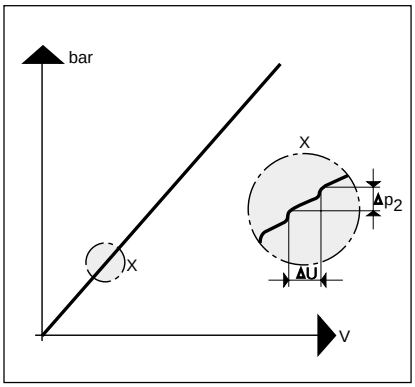

Linearity

The ideal curve showing output pressure in relation to electronic signal would be a straight (linear) line (see dotted line), to predict exactly which pressure can be expected at a given voltage. The deviation can be calculated from the maximal deviation from the straight line, in relation to the highest possible pressure.

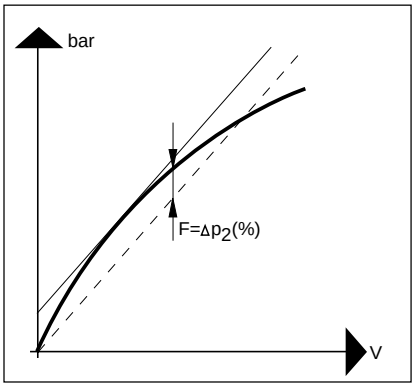

Hysteresis

The same set output pressure generates slightly different actual output pressures, depending on whether the previous setting was higher or lower. This difference, known as hysteresis, is caused by friction and temporary deformation of elastic components. The hysteresis of the CRE valve is below 0.1 bar.

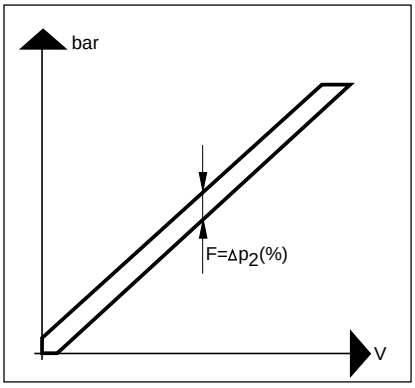

Repeatability

Control components, for a given set value, usually produce repeated actual values which differ less from each other than from the abolute set value, because the relatively large linearity deviation is excluded. Repeatability is improved if hysteresis is minimised.

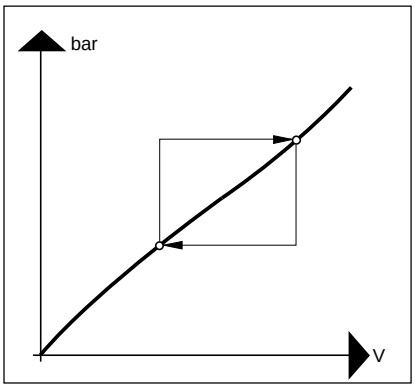

Dimensions (mm)

Type: CRE-1/2

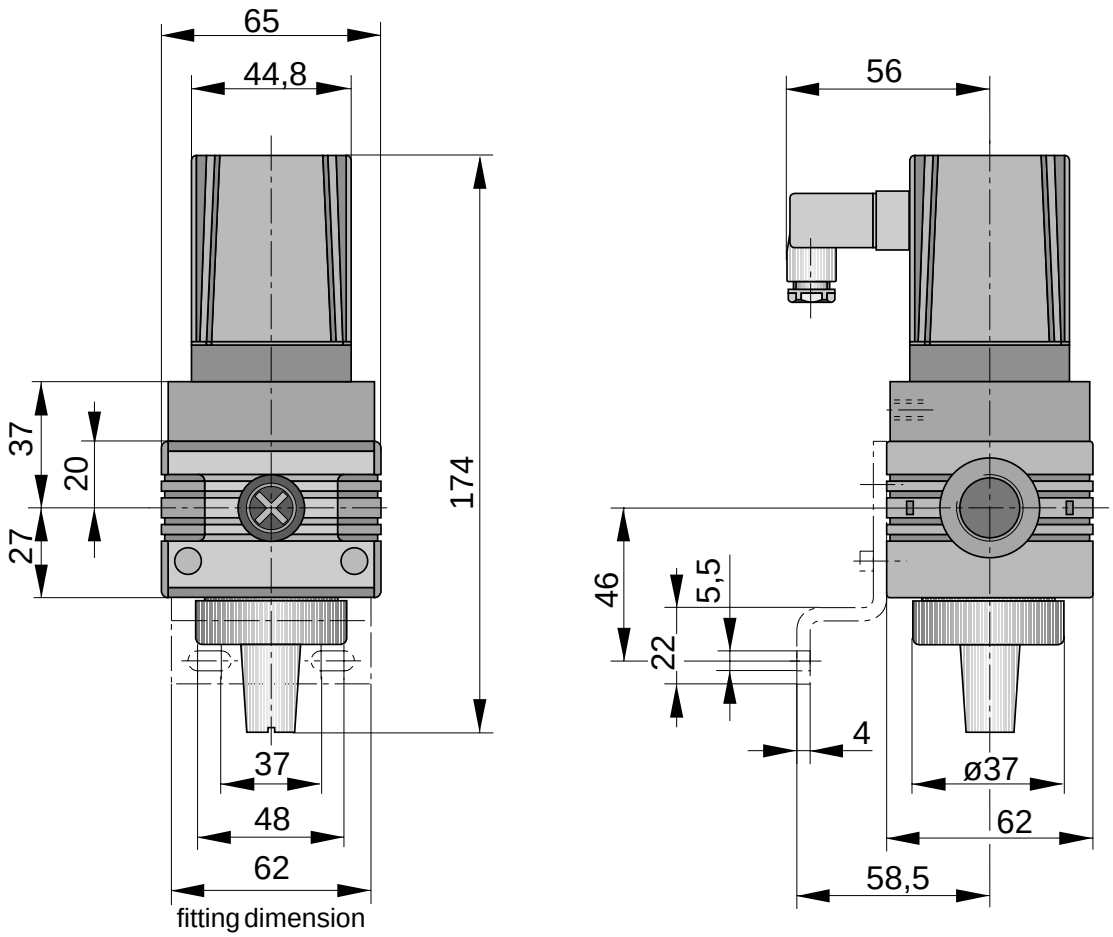

Order Instructions

Basic model for control 0– 10 V, NG (normally closed)			
Port size	max. output pressure (bar)	**Type**	**Order No.**
G3/8	10	**CRE-U-3/8 NG**	**PB 60149-000**
G1/2	10	**CRE-U-1/2 NG**	**PB 60249-000**
Version for control 4 – 20 mA			
G3/8	10	**CRE-I-3/8 NG**	**PB 60149-002**
G1/2	10	**CRE-I-1/2 NG**	**PB 60249-002**
Version for control 0 – 20 mA			
G3/8	10	**CRE-I-3/8 NG**	**PB 60149-001**
G1/2	10	**CRE-I-1/2 NG**	**PB 60249-001**
Version for control 0– 10 V, NO (normally open)			
G3/8	10	**CRE-U-3/8 NO**	**PB 60149-010**
G1/2	10	**CRE-U-1/2 NO**	**PB 60249-010**
Accessories			
Mounting kit			**PL 17518**
Coupling kit			**PL 17608**

Ex Pneumatic

piezo

HOERBIGER
ORIGA

HOERBIGER-ORIGA

... For fast and effective automation solution

HOERBIGER-ORIGA is a manufacturer and supplier of pneumatically driven components and systems designed to solve movement tasks for a variety of branches of machine construction and automation engineering. Special products and solutions for hazardous areas compliment the extensive programme.

Area's of competence

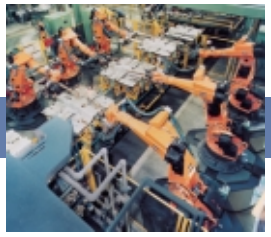

in welding technology

in the automobile industry

in the paper industry

in clean room technology

in the chemical industry

in hazardous systems

in medical technology

Our Service

HOERBIGER-ORIGA offers its partners competent, on-site support world-wide.
Your HOERBIGER-ORIGA partner provides you with professional consulation and detailed technical support quickly and efficiently.
Attenatuely you may obtain data relevant to your needs from our web site.

Technical data sheets as well as 2D and 3D drawings of our entire standard components are available in nearly every major CAD format.

You can also receive additional information from our technical catalogues, which are also available in electronic format either on CD ROM or from our homepage on the Internet.

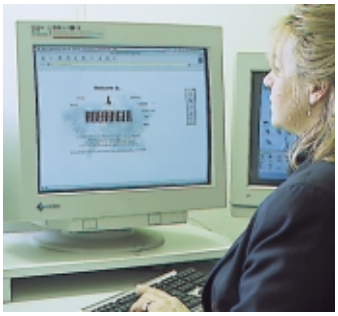

www.hoerbiger-origa.com
www.interact-system.com
www.airfit.com
www.hoerbiger.com

Contents

Page

How do piezo valves work? 6

General purpose valves

Overview and ordering data 7-9
Applications 10
3/2 way miniature piezo valves and
pilot control element – Series P9 11
3/2 way switching piezo valves - Series P10 12
3/2 way piezo valves - Series P20-OEM 13
Proportional pressure control valve
– Series PR-U-OEM 14

Directional valves with NAMUR mounting pattern

– intrinsically safe and with EEx m-solenoids 15-20

Overview and ordering data 16
Characteristics 17

– intrinsically safe valves (piezo valves)

3/2-, 4/2- and 5/2 way valves G1/4, Series S29 18

– valves with EEx m-solenoids

5/2 way valves G1/8, Series S9 19
3/2-, 4/2- and 5/2 way valves G1/4, Series S9 20

Directional valves in-line and base plate design

– intrinsically safe and with EEx m-solenoids 21-40

Overview and ordering data 22-26
Characteristics 27-29

– intrinsically safe valves (piezo valves)

3/2 way poppet valves NW 1.6, M5, Series P8 30
3/2 way poppet valves NW 2, G1/8, Series P20 31
3/2 way valves G1/4, Series S9 32
5/2 and 5/3 way valves G1/8, Series S9 33
5/2 and 5/3 way valves G1/4, Series S9 34
5/2 and 5/3 way valves, Series S9
- base plate design to ISO 5599 35

– valves with EEx m-solenoids

3/2 way poppet valves NW 1.3, Series V9 36
3/2 way valves G1/8, G1/4, G1/2, Series S9 37
5/2 way valves G1/8, G1/4, G1/2, Series S9 38
5/3 way valves G1/8, G1/4, G1/2, Series S9 39
5/2 and 5/3 way valves, Series S9
- base plate design to ISO 5599 40

Page

Accessories

P supply manifolds for directional valves
Series S9-1/8, S9-1/4, S9-1/2 41-45
RPS supply manifolds for directional valves
Series S9-1/8, S9-1/4, S9-1/2 46-47
Single base plates to ISO 5599, size 1, 2, 3
for Series S20 48
Base plate combinations to ISO 5599
Size 1, 2, 3 for Series S20 49-51

Compatibility with market leaders for control systems 52-53

Ex-Facts and Marking (Europe)

EEx ia IIC T4 / T5 / T6

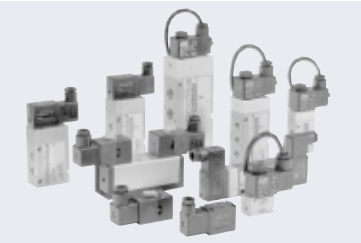

E — Certified according to European Standard CENELEC

HOERBIGER-ORIGA Valves are certified additionelly by the new ATEX 100a-Standard, Directive 94/9/EC, required July1, 2003

Ex — Explosion Proofed

i (a) — Type of Protection

Technically different principles of protection

ia: no ignition if: normal use + 1 fault or combination of 2 faults (zone 0, 1, 2)
ib: no ignition if: normal use + 1 fault (zone 1, 2)

- i – Intrinsic Safety (→ Zone 0,1,2)
- m – Encapsulation (→ Zone 1,2)
- o – Oil Immersion
- p – Excess Pressured
- q – Powder Filled
- e – Increased Safety
- d – Flameproof

IIC — Apparatus Grouping

Degree of ignition ability for different gases

Typical Gas	Minimum Ignition Energy
IIC Acetylene	20 µJ
IIC Hydrogen	20 µJ
IIB Ethylene	60 µJ
IIA propane	180µJ

T4/T5/T6 — Temperature Class

Highest permissible surface temperature of an equipment part

IEC 79-8 T-Class	Maximum Surface Temperature	Minimum Ignition Temperature of a gas
T1	450 °C	> 450 °C
T2	300 °C	> 300 – ≤ 450 °C
T3	200 °C	> 200 – ≤ 300 °C
T4	135 °C	> 135 – ≤ 200 °C
T5	100 °C	> 100 – ≤ 135 °C
T6	85 °C	> 85 – ≤ 100 °C

Area Classification

Zone 0 (gases) danger present continuosly (> 1000 hours per year)
Zone 1 (gases) danger present intermittently (10 – 1000 hours per year)
Zone 2 (gases) danger present abnormally (0 – 10 hours per year)
Amount of probability of existing danger, fixes the protection type.

(Compatible HOERBIGER-ORIGA Valves specifications are marks red)

in Explosion Areas

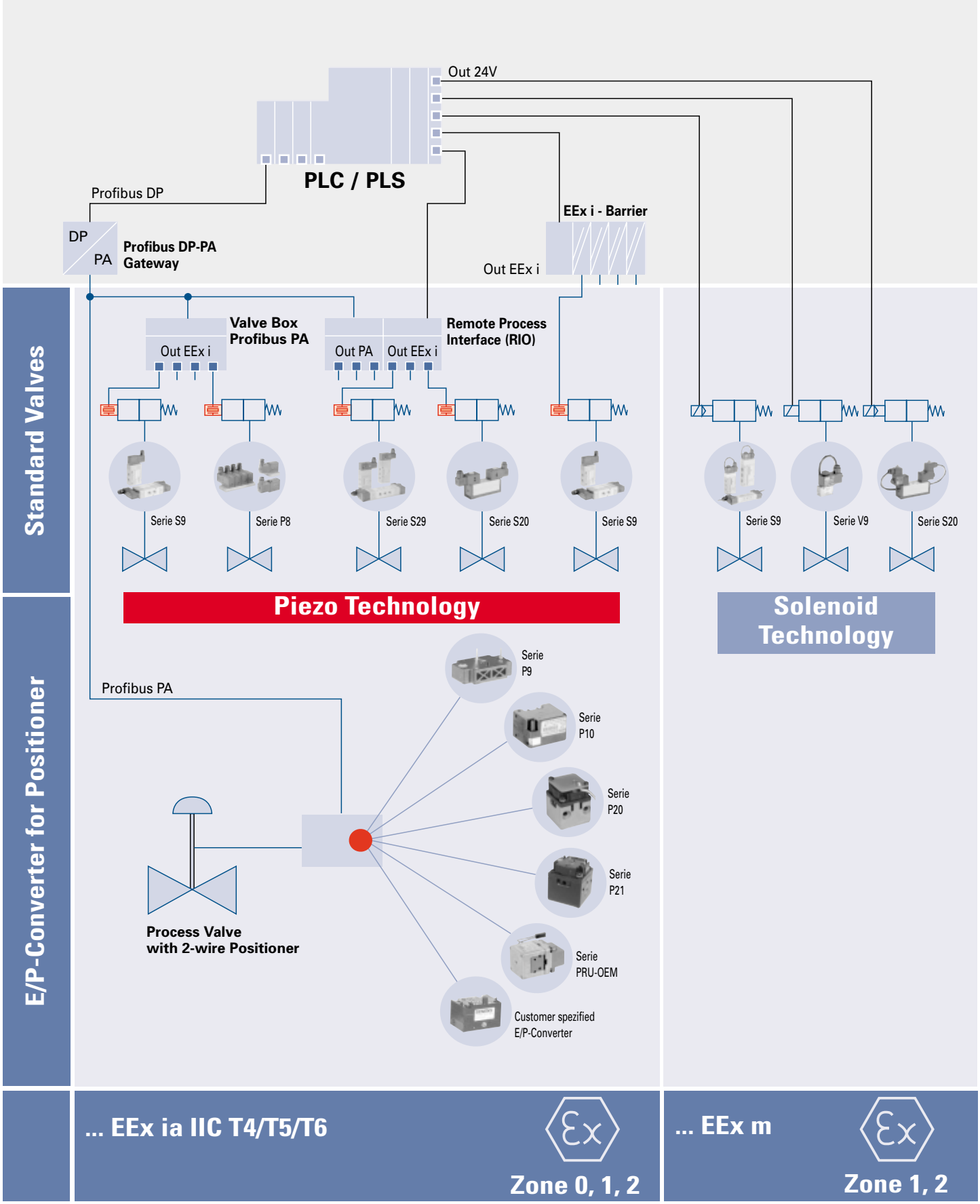

How do piezo valves work?

Design and function

The central element is a Piezo-ceramic bending element which is built up of several layers, rather like a bimetallic strip. When an electrical voltage is applied, this element bends a few hundredths of a millimetre. This bending allows air to enter the piezo valve through port 1 to port 2 (Fig. 2). In the unactuated mode, the air can flow from port 2 to port 3 (Fig. 1). Depending on the voltage applied, the lesser or greater bending of the element generates an analogue pressure signal at port 2.

The piezo valve can therefore be used either as a switching valve or as a proportional valve. Optimized versions for either switching or proportional use are available.

When the P8-valve (Fig.3) is electrically actuated (ON-condition), the signal that is filtered and prepared by the control electronics opens the supply air seat in the piezo valve. The activated control circuit actuates the integrated valve – air flows from 1 to 2. A pressure regulator and a micro-filter are connected in series before the piezo valve.

Fig. 1

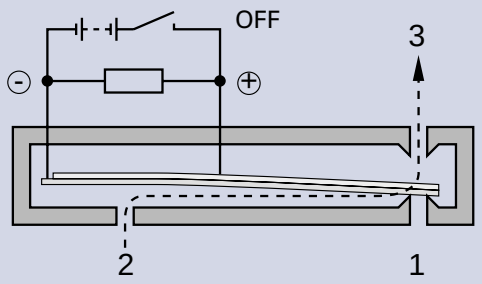

Fig. 2

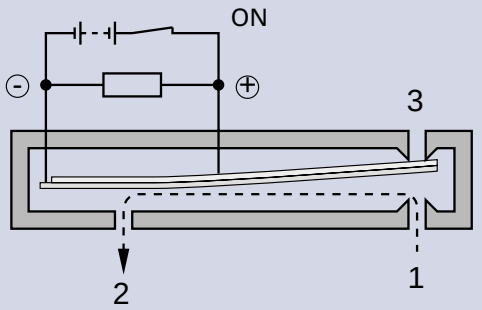

Fig. 3

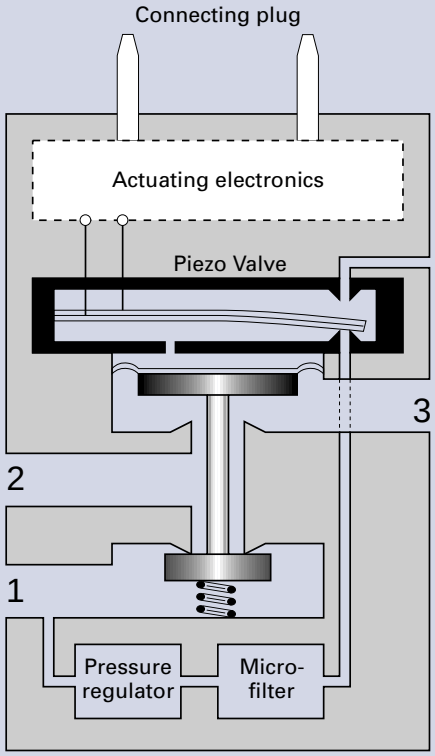

OFF condition

Fig. 4

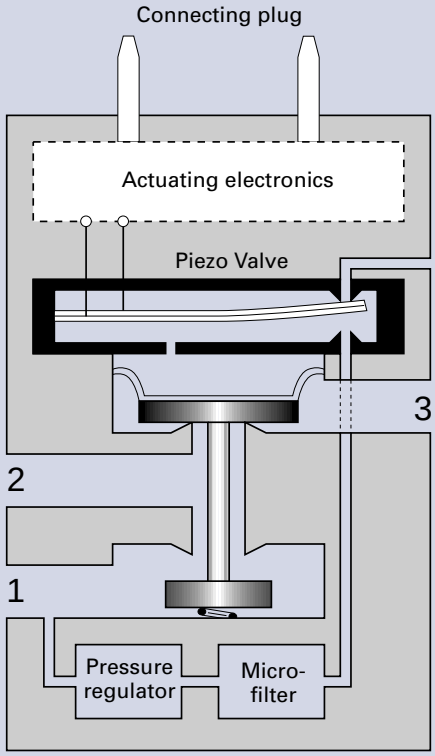

ON condition

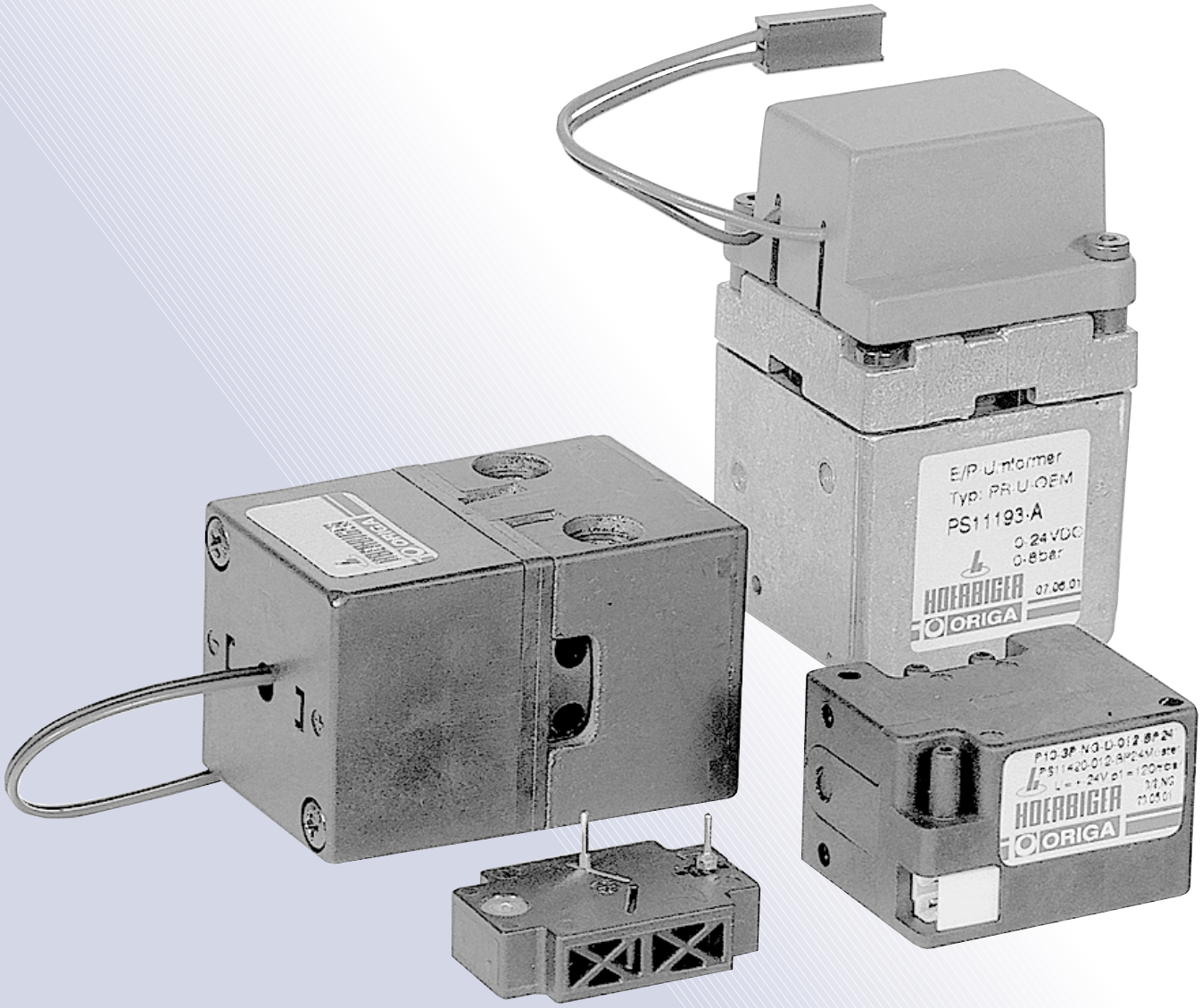
E/P-Umformer
Typ: PR-U-OEM
PS11193-A
0-24VDC
0-8bar
HOERBIGER
ORIGA
07.06.01
HOERBIGER
ORIGA

3/2 Way Piezo Miniature Valves and Pilot Valves – Series P9

Description	Symbol	Order Instructions Type	Order No.	Page
Switching valve, normally closed (+pole on the left side)	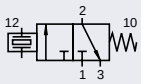	**P9-NG-S-L**	**PS 11010-11L**	11
Switching valve, normally closed (+pole on the left side)	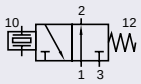	**P9-NO-S-L**	**PS 11010-21L**	11
Proportional valve, normally closed (+pole on the right and left side)	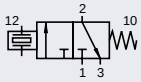	**P9-NG-P-LR**	**PS 11010-31LR**	11
Proportional valve, normally open (+pole on the right and left side)	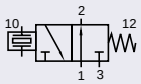	**P9-NO-P-LR**	**PS 11010-41LR**	11

3/2 Way Chip Valves (Piezo Miniature Switching Valve) – Series P10 *

Version	Symbol	Order Instructions Type	Order No.	Page
3/2 way switching valve normally closed 0.1 bar version	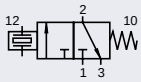	**P10-3S-NG-D-010**	**PS11400-010-A**	12
3/2 way switching valve normally closed 0.3 bar version	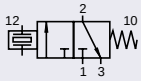	**P10-3S-NG-D-030**	**PS11400-030-A**	12
3/2 way switching valve normally closed 0.6 bar version	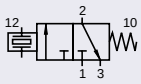	**P10-3S-NG-D-060**	**PS11400-060-A**	12
3/2 way switching valve normally closed 1.2 bar version	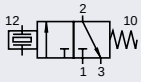	**P10-3S-NG-D-120**	**PS11400-120-A**	12
3/2 way switching valve normally closed 2.0 bar version	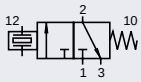	**P10-3S-NG-D-200**	**PS11400-200-A**	12

* on request:
3/2 way switching valve, normally open
2/2 way switching valve, normally closed and normally open
3/2 way proportional control valves, normally closed and normally open
2/2 way proportional control valves, normally closed and normally open

3/2 Way Piezo Valves NW 2 – Series P20-OEM

Version	Symbol	Order Instructions Type	Order No.	Page
Pilot valve, normally closed	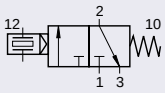	**P20 381RF-NG-COEM**	**PS10021-001A**	13
Pilot valve, normally open	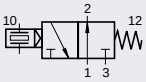	**P20 381RF-NO-COEM**	**PS10022-001A**	13
Base plate			**PS10531-A-01**	31

Base Plates see page 31

Proportional Pressure Regulating Valve NW 2 – Series PR-U-OEM

Description	Symbol	Order Instructions Type	Order No.	Page
Proportional pressure regulating valve		**PR-U-OEM**	**PS11193-A**	14
Base plate G1/8			**PS11112-A-01**	14

Actuator applications

In the following configurations piezo valves can be supplied for use in modern actuators.

Supply of P9 or P10 piezo chips as switching or proportional pilot valves
These provide the user with the highest degree of flexibility in the design of dedicated digital or analog actuator systems (IP converter with amplifier) as stand-alone devices or as part of large-scale positioning systems.

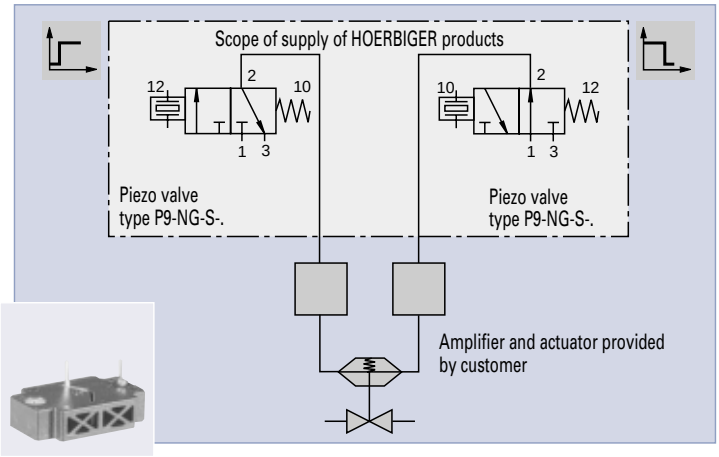

Supply of P20-OEM digital piezo valves consisting of piezo chip (pilot valve) and volume amplifier

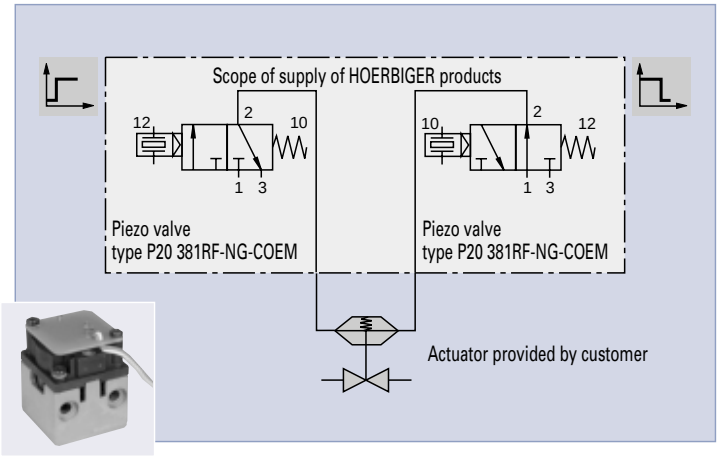

Supply of analog PR-U-OEM piezo valve consisting of piezo chip (pilot valve) and proportional main valve

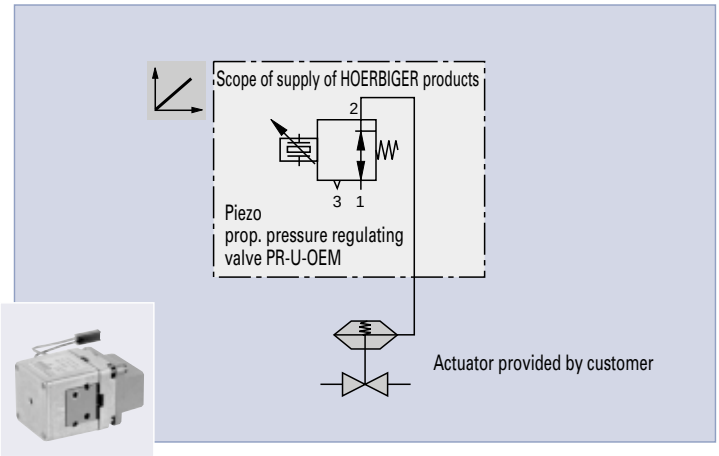

Customer-specific solutions
Complete development and delivery of customer-specific actuator control systems as part of a joint development project.

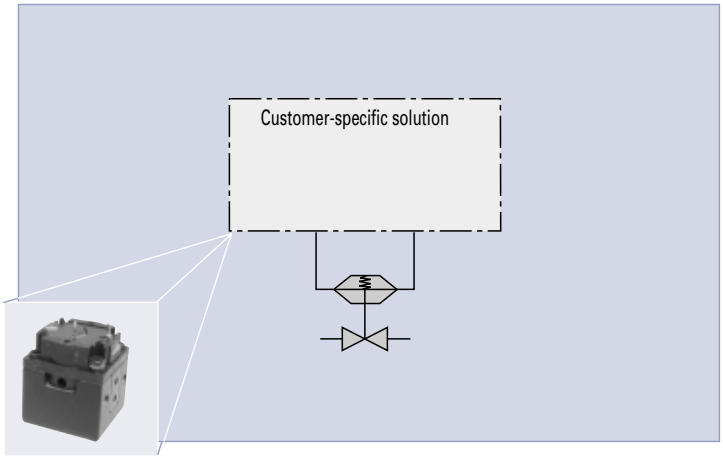

HOERBIGER Interface provides a comprehensive support package for the installation and application of all variants.

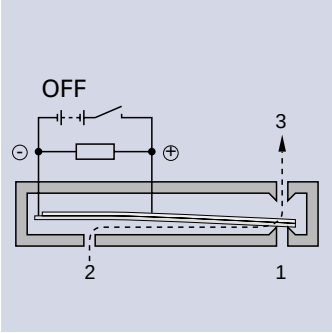

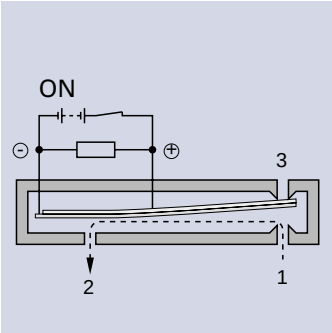

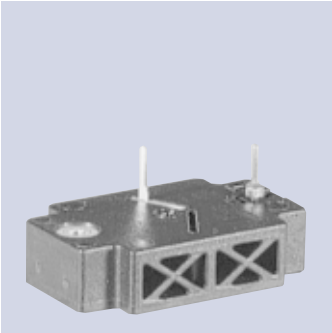

3/2 Way Piezo Miniature Valve and Pilot Valve Series P9

Versions
– Proportional valve
– Switching valve
– NC or NO

Special Versions
– Special pressure ranges
– 2/2 way valve

Characteristics	Symbol	Unit	Description	
General Features				
System			Directly actuated 3/2 way proportional poppet valve	
Housing			Plastic	
Mounting			Flange (see dimensional drawing) **	
Port size			= NW 0.33	
Weight		g	6	
Flow direction			ON: from 1 to 2 OFF: from 2 to 3	
Installation position			Optional	
Ambient temperature range	ϑ_{min} ϑ_{max}	°C °C	-30 +80	Note: When using below freezing point please contact our technical department
Pneumatic Characteristics				
Operating pressure	p_N	bar	1.2 (other pressures between 0 and 2 bar on request)	
Nominal flow	Q_N	l/min	1.5	
Medium			Filtered air (5 µ) *	
Leakage	Q_L	l/min	On: 0.15 max Off: 0.10 max	
Electrical Characteristics				
Operating voltage	U_N	V	24 DC *** (other voltages on request)	
Capacity	C	nF	< 100	
Switching energy	E	mWs	0.014	
Holding energy	P	W	0	
Switching time	t	ms	< 2	
Connection			Contact pins – ø 0.8 mm	

* other fluids on request
** observe installation recommendations
*** observe control recommendations

Piezo Chip
Typ:e P9-..-.-..

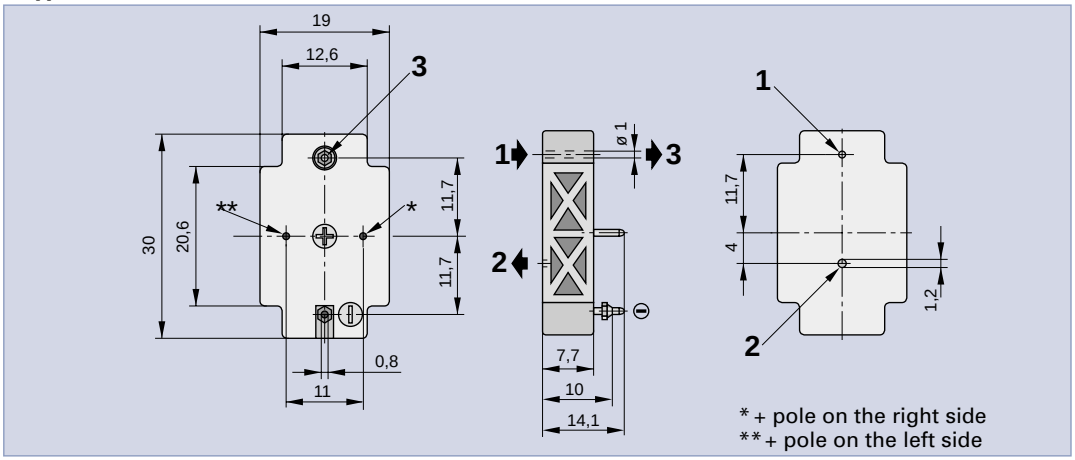

Dimensions in mm

"Chip Valve" Piezo Miniature Valve Series P10

Versions
– 3/2 way switching valves normally closed (NG)

Special Versions [4
(on request)
– 3/2 way switching valves normally open (NO)
– 2/2 way switching valves
– 3/2 way proportional control valves
– 2/2 way proportional control valves [4
normally closed and normally open versions

Scope of supply
– 1 valve
– Mounting kit consisting of 3 rollers and O-rings
– 2 M2.5 x 25 mm screws
– 2 EJOT 2.5 x 6 screws
– 1 connecting cable 2 x 0.14, 300 mm, with connector

[1 Normally open (NO) version on request
[2 Nominal pressure p_N against atmosphere
[3 Voltages < 24 V on request (not for prop. control valves)
[4 Characteristics on request
[5 Not suitable as safety valve with 100% ED

Characteristics	Symbol	Unit	Description				
General Features							
System			Directly controlled (from system) proportional control or switching poppet valve				
Mounting			Metal screws (part of scope of supply)				
Connection			Flange or nose nozzle (3 mm)				
Port size		NW	ca. 0.33				
Installation position			Optional				
Weight		g	20				
Flow direction (normally closed NG) [1			ON: from 1 to 2 OFF: from 2 to 3 (3/2-Way valve)				
Medium and ambient temperature range	ϑ_{min} ϑ_{max}	°C °C	0 +50	other temperatures on request			
Medium			Filtered air (30µ), other gases or fluids possible on request				
Pneumatic Characteristics							
Valve nominal pressure	p_N	bar	**0.1 bar**	**0.3 bar**	**0.6 bar**	**1.2 bar**	**2.0 bar**
Input pressure range	$p_{1\ min/max}$	bar	0.05–0.15	0.2–0.3	0,5–0.7	1.1–1.3	1.8–2.2
Output pressure range (proportional version)	$p_{2\ min/max}$	bar	0–0.1	0–0.3	0–0.6	0–1.2	0–2.0
Flowrate [2 3/2 way models	Q	l/min	0.5	0.9	1.5	1.5	1.4
Leckage			inlet air side 4% of Q outlet air side: 8% of Q				
Electrical Characteristics							
Operating volatage	U_N	V	24 DC (proportional control valve 0 – 24 V DC)[3				
Holding energy	P	W	0.006				
Connection			2-pin connector				
Relative switching time	ED	%	100 [5				
Electrical protection		IP	20				

Chip Valve
Type: P10-..-..-.-...

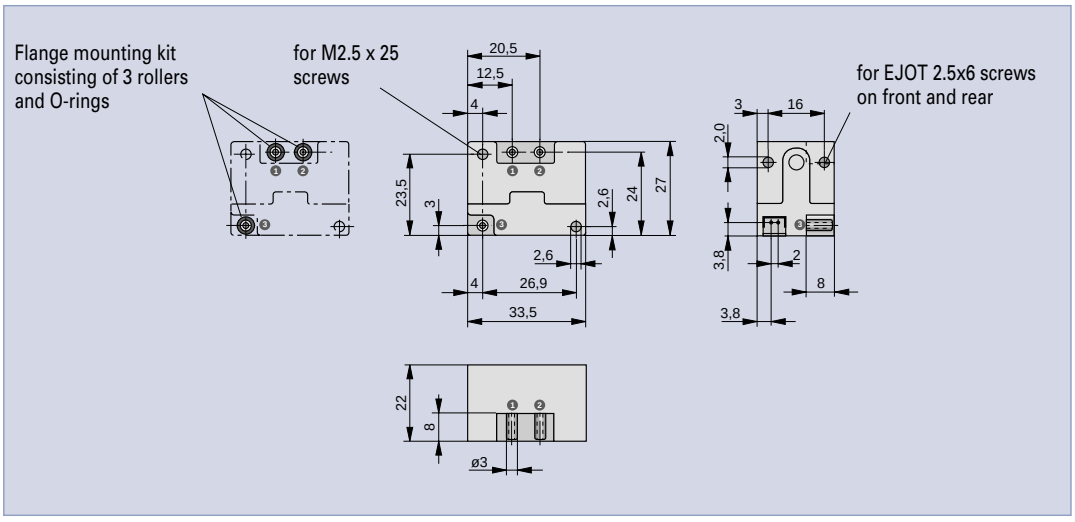

3/2 Way Piezo Valve Series P20-OEM

Series P20-OEM – NW 2.0

Characteristics	Symbol	Unit	Description
General Features			
System			Poppet valve system, pneumatic pilot control with piezo valve, some overlap
Mounting			Flange (see dim. drawing)
Pipe connection			Flange
Port size			NW2
Weight (mass)		kg	0.100
Flow direction			ON: from 1 to 2 OFF: from 2 to 3 (1
Installation position			Optional
Medium and ambient temperature range	$\vartheta_{min./max.}$	°C	-10 to +60 Note: Contact technical department advice if used in temperatures between -30 and +80°C
Medium			Dry or filtered air (30µ), no or minimal oil mist lubrication (max. 30mg/m³)
Pneumatic Characteristics			
Nominal pressure	$p_{min./max.}$	bar	6
Operating pressure	$p_{min./max.}$	bar	1.5 – 8
Nominal flow	Q_N	l/min	130 (from 6 to 5 bar)
Nominal size		mm	2.0
Electrical Characteristics			
Nominal voltage	U_N	V DC	24
Capacity	C	nF	< 100
Switching energy	E	mWS	0.014
Holding energy	P	W	0
Duty cycle	ED	%	100
Connection			Cable 300 mm long
Switching time	t_{ON} t_{OFF}	ms ms	< 20 (10% of discharge pressure) < 20 (90% of discharge pressure)
Electrical protection		IP	20 (2

(1 outlet air not included
(2 not suitable as safety valve with 100% ED

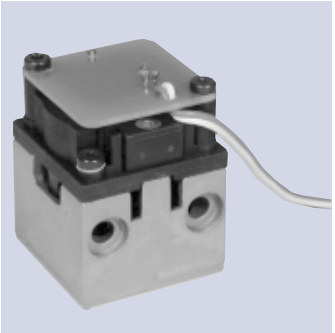

3/2 Way Piezo Valve Serie P20-OEM NW 2

Versions
– normally closed (NG)
– normally open (NO)

Note:
The valve for the P20-OEM series fulfils the requirements for approval as an intrinsically safe device when used with an appropriate controller.

Type: P20 381RF-.-COEM

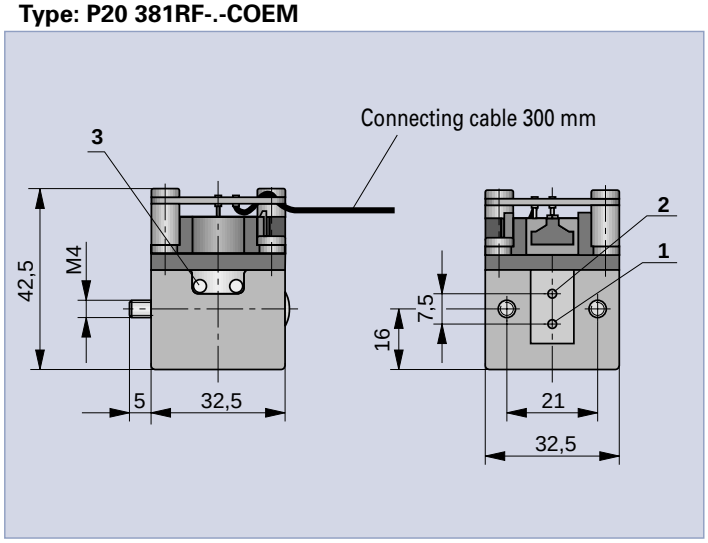

Base plate see page 31

Pressure Regulating Valve Series PR-U-OEM NW 2 and G1/8

Proportional valve with Piezo pilot

Note:
The valve for the PR-U-OEM series fulfils the requirements for approval as an intrinsically safe device when used with an appropriate controller.

A piezo valve is used as the pilot control element. The piezo valve generates a pilot pressure in the pilot chamber of the main valve proportional to the control voltage.
The supply for the piezo valve is tapped off from the control air connection 1 and passed through a pressure regulator and filter.

Series PR-U-OEM – NW 2.5

Characteristics	Symbol	Unit	Description
General Features			
Type			Membrane pressure regulating valve, pneumatic pilot control with piezo valve, some overlap
Mounting			Flange (see dim. drawing)
Connection			Flange
Port size			NW2.5
Weight (mass)		kg	0.100
Flow direction			ON: from 1 to 2 OFF: from 2 to 3 (1
Installation			In any position
Medium and ambient temperature range	$\vartheta_{min./max.}$	°C	-30 to +80 Note: When using below freezing point it is necessary to consult us.
Medium			Dry or filtered air (30µ), no or minimal oil mist lubrication (max.30mg/m³)
Pneumatic Characteristics			
Nominal pressure	$p_{min./max.}$	bar	6
Operating pressure	$p_{min./max.}$	bar	1.5 – 10
Nominal flow	Q_N	l/min	200 (from 6 to 5 bar)
Nominal size		mm	2.6
Electrical Characteristics			
Input voltage	U	V DC	0 – 24 (3
Capacity	C	nF	< 100
Switching energy	E	mWS	0.014 (from 0 to 24 V)
Holding energy	P	W	0
Connection			Connecting cable 200 mm 2-pin AMP connector Grid size 2.54
Electrical protection		IP	20

(1 outlet air not included
(2 The device should only be used in a closed control loop.
A 0-24 V DC controller should be provided (see U/P diagram).

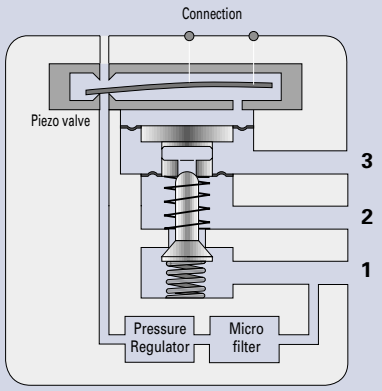

1 = Pressure supply (P)
2 = Outlet (A)
3 = Exhaust (R)

U/P-Diagram

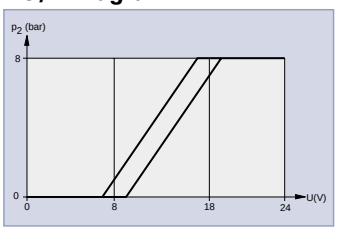

The operating voltage range of the valve may fluctuate due to temperature or long-term effects.
A control range of 0 to 24 V must therefore be designed into the controller.

Pressure Regulating Valve Type: PR-U-OEM

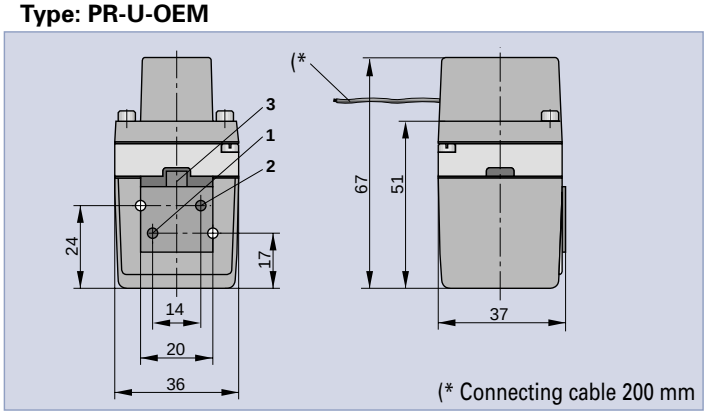

Base Plate G1/8

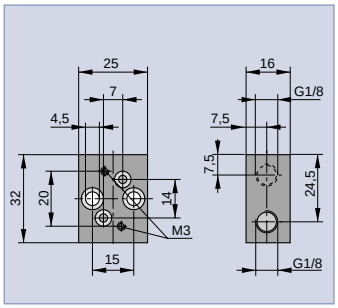

Directional Valves with NAMUR Connections

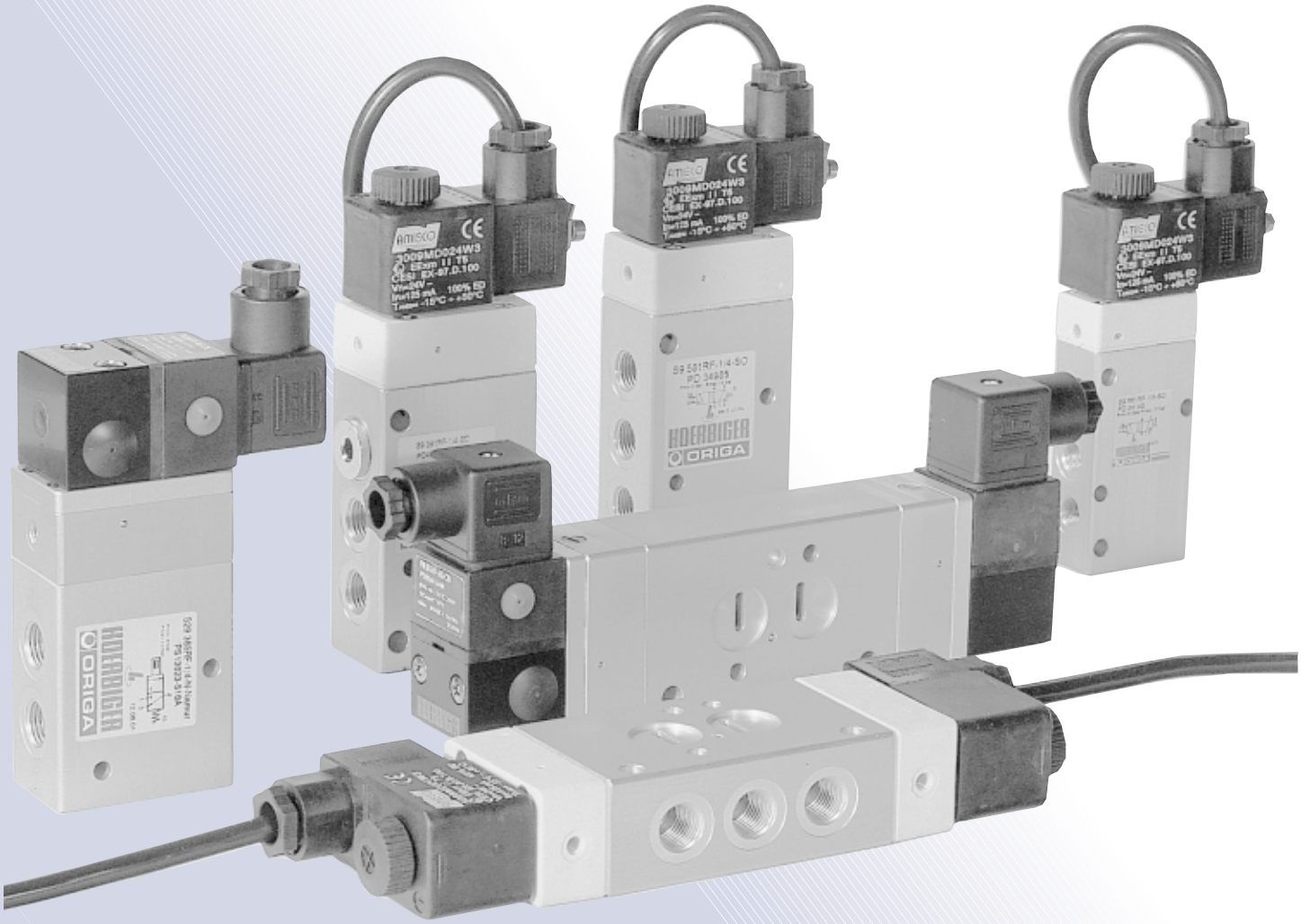

Intrinsically safe 3/2, 4/2 and 5/2 Way Valves with IP 65 and NAMUR Connection – Series S29

Actuation	Symbol	Order Instructions Type	Order No.	Page
Electrical, by permanent signal	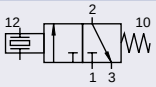	**S29 385RF-1/4-.-NAMUR**	**PS 13623-..6A**	18
Electrical, by permanent signal	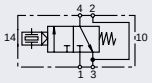	**S29 485RF-1/4-.-NAMUR**	**PS 13621-..6A**	18
Electrical, by permanent signal	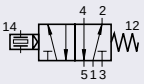	**S29 585RF-1/4-.-NAMUR**	**PS 13619-..6A**	18
Electrical, by impulse	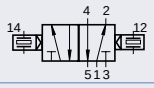	**S29 585-1/4-.-NAMUR**	**PS 13620-..6A**	21
Pilot valve as spare part (electrical, by permanent signal)	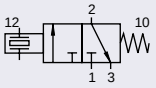	**P29 381 RF-NG-C.**	**PS 10041-..1A**	–

Version	Nominal voltage	Type key	Key code
Intrinsically safe II 2G EEx ia IIC T4/T5/T6	6 – 9 V DC 7 – 16 V DC 12 – 24 V DC 24 – 30 V DC	M N L E	54 51 55 21

3/2, 4/2 and 5/2 Way Valves with EEx m-Solenoids and NAMUR Connection – Series S9

Actuation	Symbol	Order Instructions Type	Order No.	Page
Electrical, by permanent signal	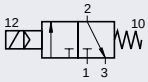	**S9 381RF-1/4-NG-SO-..**	**PD 33854-..33**	20
Electrical, by permanent signal	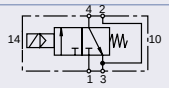	**S9 481RF-1/4-SO-..**	**PD 40996-..33**	20
Electrical, by permanent signal	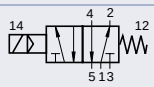	**S9 581RF-1/8-SO-..** **S9 581RF-1/4-SO-..**	**PD 34143-..33** **PD 34985-..33**	19 20
Electrical, by impulse	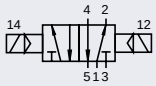	**S9 581-1/8-SO-..** **S9 581-1/4-SO-..**	**PD 34984-..33** **PD 34986-..33**	19 20

Solenoid version	Nominal voltage	Key code
Casting cover EEx m II T5	24V = 220V/50(60) Hz	48 98
	other voltages on request	

Characteristics

Series S29 – G1/4 and S9 – G1/8 -1/4

Characteristics	Symbol	Unit	Series S29, S9 G1/8		G1/4
Actuation			**Electrical piloted**		**Electrical piloted**
General Features					
Type			Spool valve		Spool valve
Mounting			2 screws M5		2 screws M6
Tube connection			Thread and NAMUR connection		Thread and NAMUR connection
Thread			G1/8 – 7.4 deep		G1/4 – 11 deep
Weight		kg	See page 18		see page 19, 20
Installation			In any position		in any position
Ambient temperature range	$\vartheta_{min./max.}$	°C	-10 to +60	Note: When using below freezing point	
Medium temperature range	$\vartheta_{min./max.}$	°C	-10 to +60	please contact our technical department	
Medium			Filtered compressed air (30µ)		
Lubrication			With or without oil mist lubrication (1 (we recommend the use of mineral oil type VG 32 to ISO 3448)		
Pneumatic Characteristics					
Nominal pressure	$p_{min./max.}$	bar	6		6
Operating pressure range – Permanent signal range	$p_{min./max.}$	bar	2–8 (Series S29), 2–10 (Series S9)		2–8 (Series S29), 2–10 (Series S9)
– Impulse range	$p_{min./max.}$	bar	1.5–8 (Series S29), 1.5–10 (Series S9)		1.5–8 (Series S29), 1.5–10 (Series S9) (2
Nominal flow	Q_N	l/min	500 (450 at 3/2-way valve)		1300 (3
Actuation					
Actuation pressure range					
– Permanent signal range	$p_{min./max.}$	bar	2–8 (Series S29), 2–10 (Series S9)		2–8 (Series S29), 2–10 (Series S9)
– Impulse range	$p_{min./max.}$	bar	1.5–8 (Series S29), 1.5–10 (Series S9)		1.5–8 (Series S29), 1.5–10 (Series S9) (2
Electrical piloted			●		●

Piezo Electrical Actuation (4						
Conformity			EU type test certificate DMT 01 ATEX E 025 X, DMT 01 ATEX E 026 X			
Category			II 2G EEx ia IIC T4/T5/T6			
HOERBIGER-Code			M	N	L	E
Voltage			DC			
Switching voltage	U	V/DC	6 – 9	7 – 16	12 – 24	24-30
Initial current	I	mA	–	–	–	1,6
Permanent currant	I	mA	1 – 2	2 – 5.5	1.5 – 3.5	0.24 – 0.3
Electrical protection			IP65 / IP54			
Connection			Plug to DIN 43650A			
Safety data according to EU type test certificate						
Voltage	U_i	V	9	16	24	30
Current	I_i	mA	–	–	–	150
Outer capacity	C_i	nF	12	12	12	12
Outer inductivity	L_i	nH	120	120	120	120

Electrical, EEx m-solenoids					
Class of protection			EEx m		
Voltage			AC	DC	
Nominal voltage	U_n	V	220	24	other voltages on request
Initial power consumption		VA (W)	5.0	5.1	
Continuous consumption		VA (W)	5.0	5.1	
Electrical protection			IP 65 to DIN 40050 (with plug)		
Insulating material			E to VDE 0580		
Connection			Cable 1200 mm long		

(1 at piezo electrical actuated valve: dried or filtered air (30µ), nor or minimal oil mist lubrication (max.30mg/m³)
(2 at differential piston version 2.5 – 8 bar (Series S29), 2.5–10 (Series S9)
(3 at version middle position exhausted 1000 l/min
(4 not suited as safety valve with 100% ED

3/2, 4/2 and 5/2 Way Valve Series S29 G1/4

with NAMUR connections

Actuation:
– Piezo electric actuated

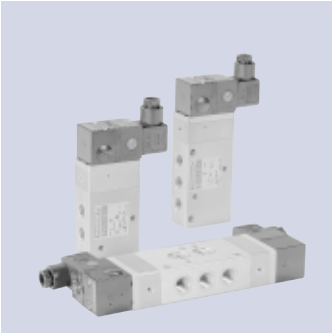

The delivery includes:
1 Valve
2 Mounting screws
1 Coding pin
2 O-rings

3/2 Way valve
Type: S29 385RF-1/4-.- Namur

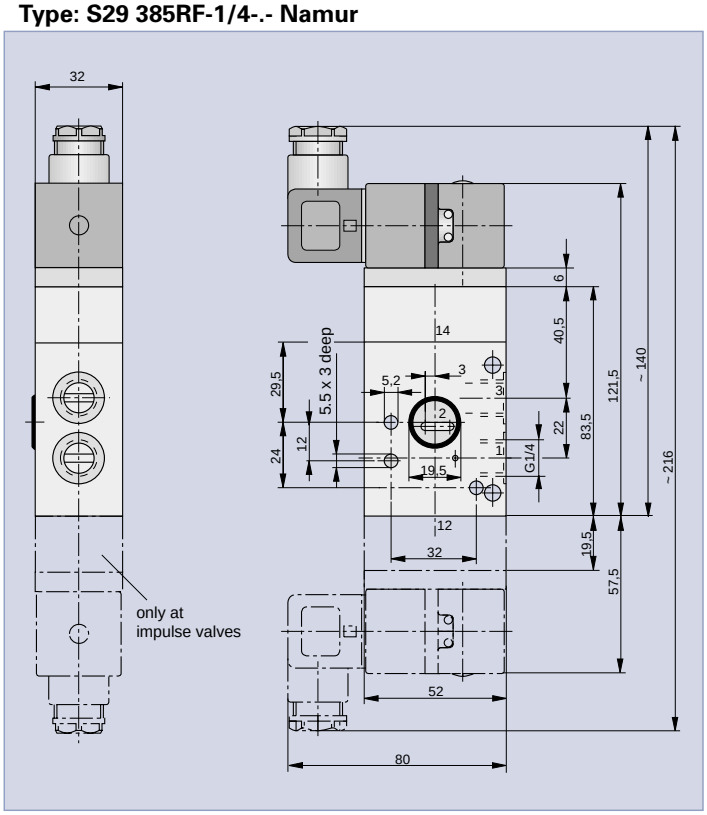

Weight (mass) kg

Description	Type	Weight (mass)
Electrical, by perm. signal	S29 385RF-1/4-.-NAMUR	0.460
Electrical, by perm. signal	S29 485RF-1/4-.-NAMUR	0.550
Electrical, by perm. signal	S29 585RF-1/4-.-NAMUR	0.550
Electrical, by impulse	S29 585-1/4-.-NAMUR	0.650

4/2 and 5/2 Way Valve
Type: S29 4(5)85RF-1/4-.- Namur, S29 585-1/4-.- Namur

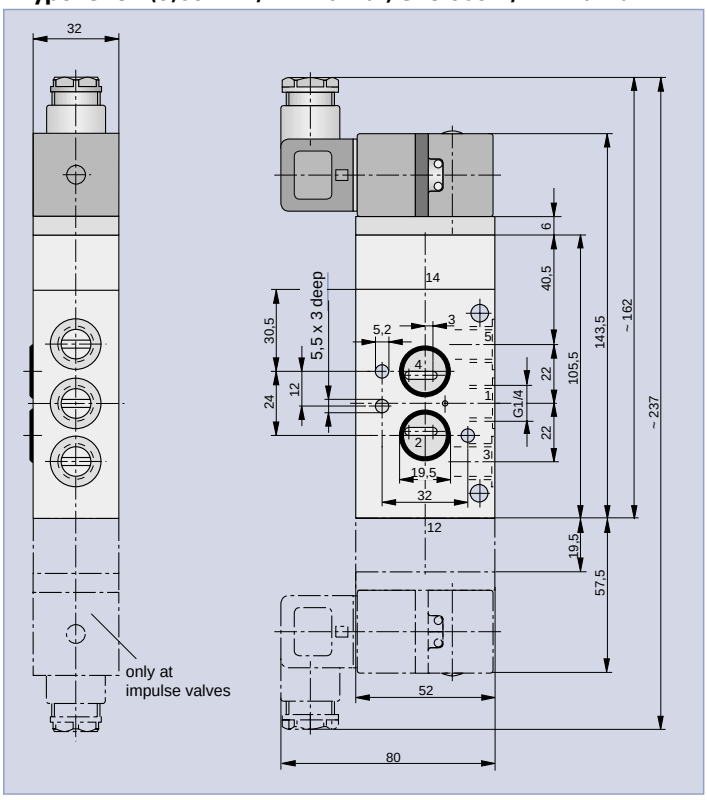

Order Instructions see page 16, Characteristics see page 17

5/2 Way valve
Type: S9 581RF-1/8-SO-.., S9 581-1/8-SO-..

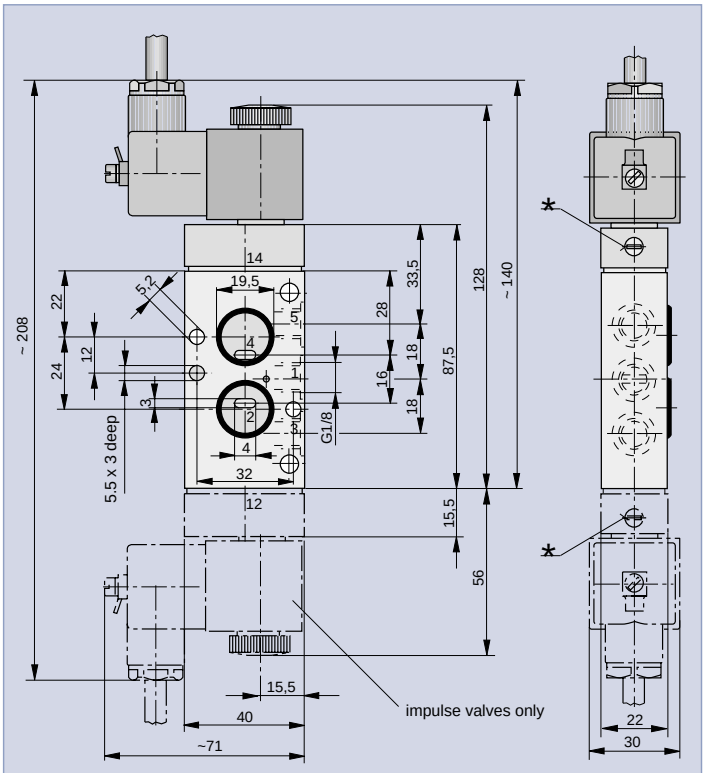

* Manual override

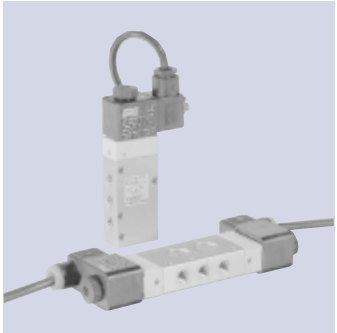

5/2 Way Valve Series S9 G1/8

with NAMUR connections

Actuation:
EEx m-solenoids
–Electrical pilot operation

The delivery includes:
1 Valve
2 Mounting screws
1 Coding pin
2 O-rings

Weight (mass) kg

Description	Type	Weight (mass)
Electrical, by perm. signal	S9 581RF-1/8-..	0.280
Electrical, by impulse	S9 581-1/8-..	0.415

Order Instructions see page 16, Characteristics see page 17
P-supply and RPS manifolds see page 41, 42, 46

3/2, 4/2 and 5/2 Way Valve Series S9 G1/4

with NAMUR connections

Actuation:
EEx m-Solenoids
– Electrical pilot operation

The delivery includes:
1 Valve
2 Mounting screws
1 Coding pin
2 O-rings

3/2 Way valve
Type: S9 381RF-1/4-SO-..

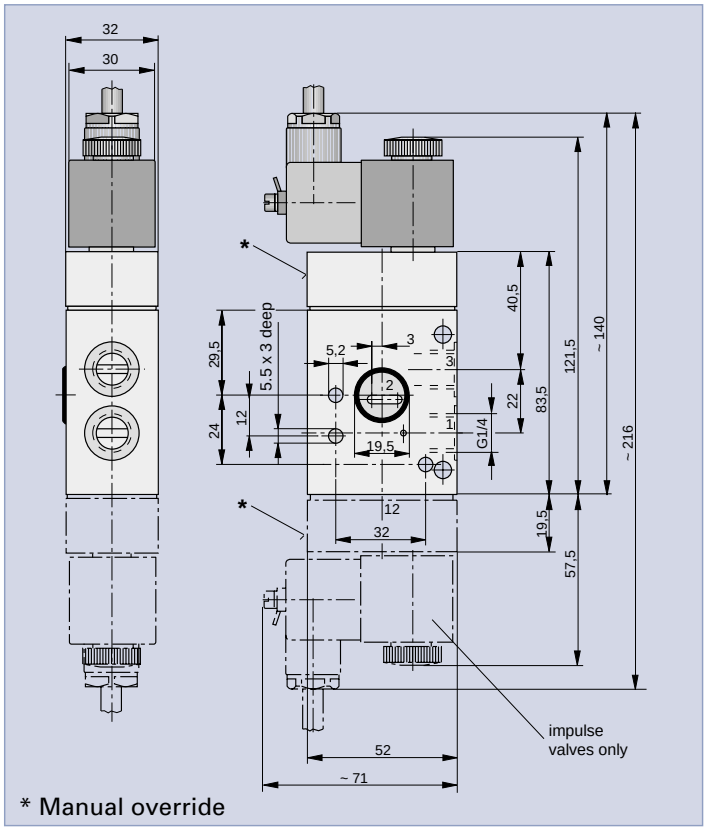

* Manual override

Weight (mass) kg

Description	Type	Weight (mass)
Electrical, by perm. signal	S9 381RF-1/4-..	0.500
Electrical, by perm. signal	S9 481RF-1/4-..	0.600
Electrical, by perm. signal	S9 581RF-1/4-..	0.600
Electrical, by impulse	S9 581-1/4-..	0.700

4/2 and 5/2 Way valve
Type: S9 4(5)81RF-1/4-SO-..,S9 581-1/4-SO-..

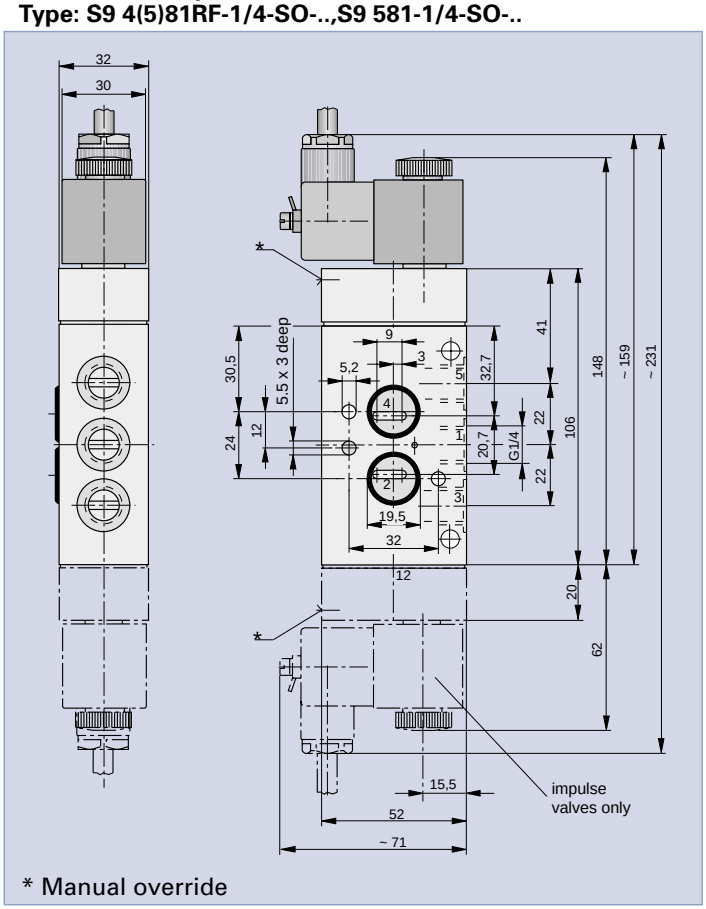

* Manual override

Order Instructions see page 16, Characteristics see page 17
P-supply and RPS manifolds see page 43,44,47

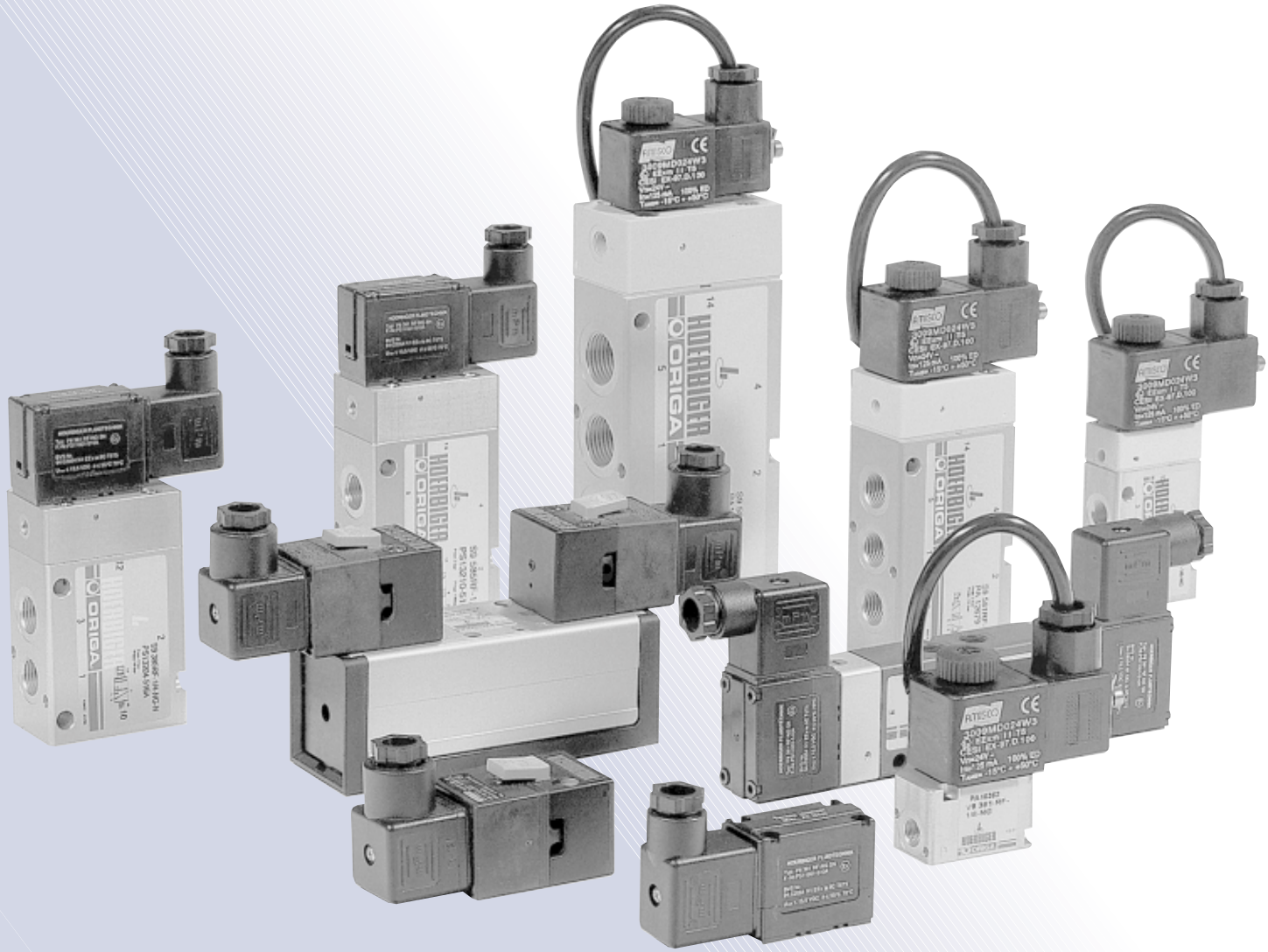
HOERBIGER
ORIGA

Overview and Order Instructions

3/2 Way Poppet Valves (Pilot and Single Valves) – Series P8

Actuation	Symbol	Port size	Order Instructions Type	Order No.	Page
Pilot valve [1] normally closed	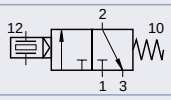	NW 1.6	**P8 381RF-NG-S.**	**PS 11001-..0A**	30
normally open	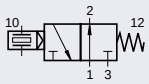	NW 1.6	**P8 381RF-NO-S.**	**PS 10002-..0A**	30
Single valve M5 [2] normally closed	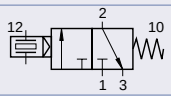	M5	**P8 381RF-M5 NG-S.**	**PS 11003-..0A-01**	30

[1] without base plate and without plug
[2] with plug and with base plate

Version	Nominal voltage	Type key	Key code
Intrinsically safe II 2G EEx ia IIC T4/T5/T6	6 – 9 V DC 7 – 16 V DC 12 – 24 V DC 24 – 30 V DC	M N L E	54 51 55 21

3/2 Way Poppet Valves (Pilot and Single Valve) – Series P20

Actuation	Symbol	Port size	Order Instructions Type	Order No.	Page
Pilot valve [1] normally closed	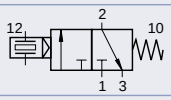	NW 2	**P20 381RF-NG-C.**	**PS 10021-..1A**	31
normally open	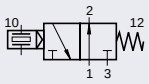	NW 2	**P20 381RF-NO-S.**	**PS 10022-..1A-01**	31
Single valve G1/8 [2] normally closed	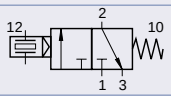	G1/8	**P20 381RF-1/8NG-C.**	**PS 10023-..1A-01**	31

[1] without base plate and without plug
[2] with plug and with base plate

Version	Nominal voltage	Type key	Key code
Intrinsically safe II 2G EEx ia IIC T4/T5/T6	6 – 9 V DC 7 – 16 V DC 12 – 24 V DC 24 – 30 V DC	M N L E	54 51 55 21

Base Plates and Accessories for Series P8 and P20

Series P8

Description	Type	Order No.
Base plate for 1 valve		**PS11614-A-01**
Base plate for 2 valves		**PS11614-A-02**
Base plate for 4 valves		**PS11614-A-04**
Base plate for 6 valves		**PS11614-A-06**
Base plate for 8 valves		**PS11614-A-08**
Base plate for 10 valves		**PS11614-A-10**
Blanking plate, complete		**PS11530-A**
Plug	**GSD-22**	**KY9393**

Series P20

Description	Type	Order No.
Base plate for 1 valve		**PS10531-A-01**
Base plate for 2 valves		**PS10531-A-02**
Base plate for 4 valves		**PS10531-A-04**
Base plate for 6 valves		**PS10531-A-06**
Base plate for 8 valves		**PS10531-A-08**
Base plate for 10 valves		**PS10531-A-10**
Blanking plate, complete		**PS10559-A**
Plug	**GSD-30**	**KY5637**

Overview and Order Instructions

3/2 Way Valves – Series S9

Actuation	Symbol	Order Instructions Type	Order No.	Page
Electrical, by permanent signal	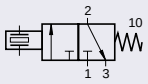	S9 385RF-1/4-.	PS 13204-..6A	32
Electrical, by impulse	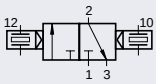	S9 385-1/4-.	PS 13200-..6A	32

5/2 Way Valves – Series S9

Actuation	Symbol	Order Instructions Type	Order No.	Page
Electrical, by permanent signal	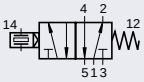	S9 585RRF-1/8-. S9 585RF-1/4-.	PS 13118-..6A PS 13210-..6A	33 34
Electrical, by impulse	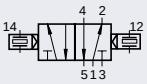	S9 585-1/8-. S9 585-1/4-.	PS 13104-..6A PS 13222-..6A	33 34

5/3 Way Valves – Series S9

Actuation	Symbol	Order Instructions Type	Order No.	Page
Electrical, by permanent signal with spring return to middle position	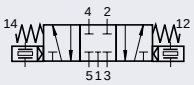	S9 585RFG-1/8-. S9 585RFG-1/4-.	PS 13108-..6A PS 13212-..6A	33 34
Electrical, by permanent signal with spring return to middle position	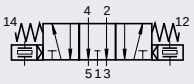	S9 585RFE-1/8-. S9 585RFE-1/4-.	PS 13109-..6A PS 13213-..6A	33 34
Electrical, by permanent signal with spring return to middle position	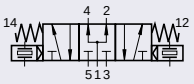	S9 585RFB-1/8-. S9 585RFB-1/4-.	PS 13110-..6A PS 13214-..6A	33 34

5/2 and 5/3 Way Valves to ISO 5599 – Sizes 1, 2, 3 – Series S20

Actuation	Symbol	Order Instructions Type	Order No.	Page
Electrical, by permanent signal, spring return	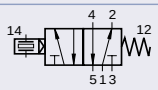	S20 585RF-1-.. S20 585RF-2-.. S20 585RF-3-..	PS 13704-..1A PS 13724-..1A PS 13744-..1A	35
Electrical, by permanent signal, air spring return	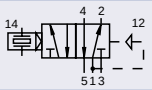	S20 585R-1-.. S20 585R-2-.. S20 585R-3-..	PS 13702-..1A PS 13722-..1A PS 13742-..1A	35
Electrical, by impulse	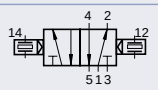	S20 585-1-.. S20 585-2-.. S20 585-3-..	PS 13700-..1A PS 13720-..1A PS 13740-..1A	35
Electrical, by permanent signal, with spring return to middle position	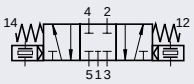	S20 585RFG-1-.. S20 585RFG-2-.. S20 585RFG-3-..	PS 13706-..1A PS 13726-..1A PS 13746-..1A	35
	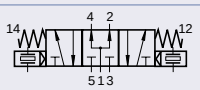	S20 585RFB-1-.. S20 585RFB-2-..	PS 13710-..1A PS 13730-..1A	35
	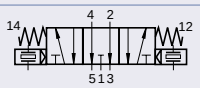	S20 585RFE-1-.. S20 585RFE-2-.. S20 585RFE-3-..	PS 13708-..1A PS 13728-..1A PS 13748-..1A	35

Version	Nominal voltage	Type key	Key code
Intrinsically safe II 2G EEx ia IIC T4/T5/T6	6 – 9 V DC 7 – 16 V DC 12 – 24 V DC 24 – 30 V DC	M N L E	54 51 55 21

Overview and Order Instructions

3/2 Way Valves – Standard Versions with EX-Proof-Solenoids

Actuation		Symbol	Order Instructions Type	Order No.	Page
Electrical, by permanent signal		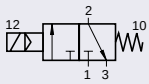	S9 381RF-1/8-NG-.. S9 381RF-1/4-NG-.. S9 381RF-1/2-NG-..	PA 10297-..33 PA 12716-..33 PA 16412-..33	37
		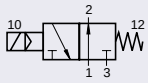	S9 381RF-1/8-NO-.. S9 381RF-1/4-NO-.. S9 381RF-1/2-NO-..	PA 10298-..33 PA 12717-..33 PA 16413-..33	37
with external pilot air		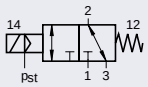	S9 381S-RF-1/8-.. S9 381S-RF-1/4-.. S9 381S-RF-1/2-..	PA 10300-..33 PA 12719-..33 PA 16415-..33	37
Electrical, by impulse		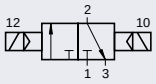	S9 381-1/8-.. S9 381-1/4-.. S9 381-1/2-..	PA 10299-..33 PA 12718-..33 PA 16414-..33	37
Electrical, by impulse with external pilot air		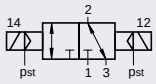	S9 381S-1/8-.. S9 381S-1/4-.. S9 381S-1/2-..	PA 10301-..33 PA 12720-..33 PA 16417-..33	37
Electrical, by impulse, differential piston		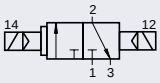	S9 382-1/4-.. S9 382-1/2-..	PA 12721-..33 PA 16418-..33	37
with external pilot air		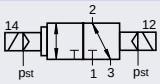	S9 382S-1/4-.. S9 382S-1/2-..	PA 12722-..33 PA 16419-..33	37
Electrical, by permanent signal	NW 1.3	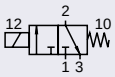	V9 381RF-1/8-NG-..	PA 10362-..33	36
	NW 1.3	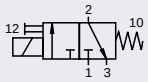	V9 381H-RF-1/8-NG-..	PA 10363-..33	36
	NW 1.3	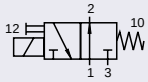	V9 381H-RF-1/8-NO-..	PA 10367-..33	36

5/2 Way Valves – Standard Versions with EX-Proof-Solenoids

Actuation	Symbol	Order Instructions Type	Order No.	Page
Electrical, by permanent signal	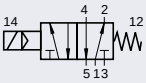	S9 581RF-1/8-.. S9 581RF-1/4-.. S9 581RF-1/2-..	PA 10312-..33 PA 12679-..33 PA 16171-..33	38
with external pilot air	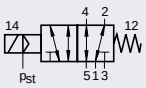	S9 581S-RF-1/8-.. S9 581S-RF-1/4-.. S9 581S-RF-1/2-..	PA 10314-..33 PA 12681-..33 PA 16174-..33	38
Electrical, by impulse	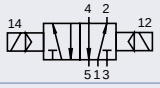	S9 581-1/8-.. S9 581-1/4-.. S9 581-1/2-..	PA 10313-..33 PA 12680-..33 PA 16172-..33	38
with external pilot air	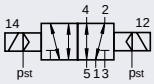	S9 581S-1/8-.. S9 581S-1/4-.. S9 581S-1/2-..	PA 10315-..33 PA 12682-..33 PA 16175-..33	38
Electrical, by impulse, differential piston	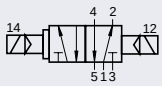	S9 582-1/4-.. S9 582-1/2-..	PA 12683-..33 PA 16173-..33	38
with external pilot air	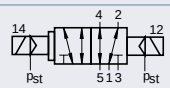	S9 582S-1/4-..	PA 12684-..33	38

Solenoid version	Nominal voltage	Key code
EX-proof version	24V = 220V/50(60) Hz	48 98
	Further voltages available on request	

5/3 Way Valves – Standard Versions with EX-Proof-Solenoids

Actuation	Symbol	Order Instructions Type	Order No.	Page
Electrical, by permanent signal with spring return to middle position	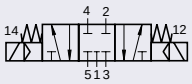	**S9 581RFG-1/8-..** **S9 581RFG-1/4-..** **S9 581RFG-1/2-..**	**PA 10333-..33** **PA 12705-..33** **PA 16176-..33**	39
	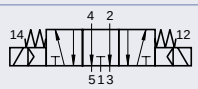	**S9 581RFE-1/8-..** **S9 581RFE-1/4-..** **S9 581RFE-1/2-..**	**PA 10334-..33** **PA 12706-..33** **PA 16177-..33**	39
	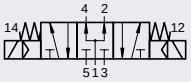	**S9 581RFB-1/8-..** **S9 581RFB-1/4-..** **S9 581RFB-1/2-..**	**PA 10335-..33** **PA 12707-..33** **PA 16178-..33**	39

Solenoid version	Nominal voltage	Key code
EX-proof version	24V = 220V/50(60) Hz	48 98
	Further voltages available on request	

Overview and Order Instructions

5/2 Way Valves – Standard Version with EX-Proof-Solenoids to ISO 5599 – Sizes 1, 2, 3

Actuation	Symbol	Order Instructions Type	Order No.	Page
Electrical, by permanent signal with spring return	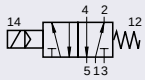	S20 581RF-1-.. S20 581RF-2-.. S20 581RF-3-..	PA 12875-..33 PA 16441-..33 PA 16442-..33	40
with external pilot air	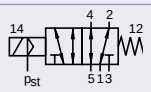	S20 581S-RF-1-.. S20 581S-RF-2-.. S20 581S-RF-3-..	PA 12882-..33 PA 16456-..33 PA 16462-..33	40
Electrical, by permanent signal with air spring return	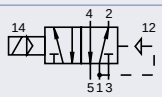	S20 581R-1-.. S20 581R-2-.. S20 581R-3-..	PA 12876-..33 PA 16444-..33 PA 16445-..33	40
Electrical, by impulse	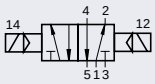	S20 581-1-.. S20 581-2-.. S20 581-3-..	PA 12874-..33 PA 16438-..33 PA 16439-..33	40
with external pilot air	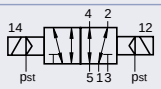	S20 581S-1-.. S20 581S-2-.. S20 581S-3-..	PA 12880-..33 PA 16454-..33 PA 16460-..33	40

5/3 Way Valves – Standard Version with EX-Proof-Solenoids to ISO 5599 – Sizes 1, 2, 3

Actuation	Symbol	Order Instructions Type	Order No.	Page
Electrical, by permanent signal with spring return to middle position	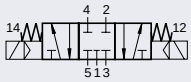	S20 581RFG-1-.. S20 581RFG-2-.. S20 581RFG-3-..	PA 12877-..33 PA 16447-..33 PA 16448-..33	40
	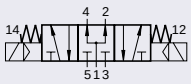	S20 581RFB-1-.. S20 581RFB-2-..	PA 12879-..33 PA 16453-..33	40
	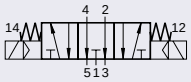	S20 581RFE-1-.. S20 581RFE-2-.. S20 581RFE-3-..	PA 12878-..33 PA 16450-..33 PA 16451-..33	40
with external pilot air	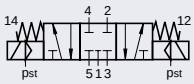	S20 581S-RFG-1-.. S20 581S-RFG-2-.. S20 581S-RFG-3-..	PA 12883-..33 PA 16457-..33 PA 16463-..33	40
	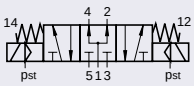	S20 581S-RFB-1-.. S20 581S-RFB-2-..	PA 12885-..33 PA 16459-..33	40
	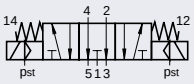	S20 581S-RFE-1-.. S20 581S-RFE-2-.. S20 581S-RFE-3-..	PA 12884..33 PA 16458..33 PA 16464..33	40

Solenoid version	Nominal voltage	Key code
EX-proof version	24V = 220V/50(60) Hz	48 98
	Further voltages available on request	

Characteristics

Series P8 – NW1.6 and M5, P20 – NW 2.0 and G1/8

Characteristics	Symbol	Unit	**Series P8 NW 1.6 and M5**	**Series P20 NW 2.0 and G1/8**
Actuation			**piezo electrical piloted**	**piezo electrical piloted**
General Features				
Type			Piezo poppet valve, some overlap	Piezo poppet valve, some overlap
Mounting			Flange (see dimensional drawing)	Flange to CNOMO (see dimensional drawing)
Tube connection			Flange / Thread	Flange / Thread
Thread			M5 – with base plate	G1/8 – with base plate
Weight		kg	0.050 (pilot valve) .	0.080 (pilot valve)
Flow direction			ON: from 1 to 2 OFF: from 2 to 3	ON: from 1 to 2 OFF: from 2 to 3
Installation			In any position	In any position
Ambient temperature range (1	$\vartheta_{min./max.}$	°C	-10 to +60	-10 to +60
Medium temperature range (1	$\vartheta_{min./max.}$	°C	-10 to +60	-10 to +60
Medium			Filtered air (30µ), nor or minimal oil mist lubrication (max.30mg/m³) (2 (we recommend the use of mineral oil type VG 32 to ISO 3448)	
Pneumatic Characteristics				
Nominal pressure	$p_{min./max.}$	bar	6	6
Operating pressure range	$p_{min./max.}$	bar	1.2 – 8	1.2 – 8
Nominal flow	Q_N	l/min	50 b = 0,34; C = 12,5 l/min bar)	110 b = 0.33; C = 26.5 l/min bar)
Nominal size		mm	1.6	2.0

Piezo Electrical Actuation (2						
Approval			EU type test certificate DMT 01 ATEX E 026 X / DMT 01 ATEX E 025 X			
Category, type of protection			II 2G EEx ia IIC T4/T5/T6			
HOERBIGER Code			M	N	L	E
Voltage			DC			
Switching voltage *	U	V/DC	6 – 9	7 – 16	12 – 24	24 – 30
Initial current	I	mA	–	–	–	1.6
Holding current	I	mA	1 – 2	2 – 5.5	1.5 – 3.5	0.24 – 0.3
Electrical protection			IP54			
Connection			Plug to DIN 43650A			
Safety data according to EU type test certificate						
Voltage	U_i	V	9	16	24	30
Current	I_i	mA	–	–	–	150
External capacitance	C_i	nF	12	12	12	12
External inductance	L_i	nH	120	120	120	120

(1 Note: When using below freezing point please contact our technical department.
(2 Not suitable as safety valve with 100% ED

Characteristics

Series S9 – G1/8 to G1/2, Series V9-G1/8

Characteristics	Symbol	Unit	Series V9 G1/8	Series S9 G1/8	Series S9 G1/4	Series S9 G1/2
Actuation			**Electrical direct**	**electrical piloted or piezo electrical piloted**	**electrical piloted or piezo electrical piloted**	**electrical piloted**
General Features						
Type			Poppet valve	Spool valve	Spool valve	Spool valve
Mounting			2 screws M3	2 screws M5	2 screws M6	2 screws M6
Tube connection			Thread	Thread	Thread	Thread
Thread			G1/8–8 deep	G1/8 – 7.4 deep	G1/4 – 11 deep	G1/2 – 16 deep
Weight		kg	0.140	see page 33, 37-39	see page 32, 34, 37-39	see page 37-39
Installation			in any position	in any position	in any position	in any position
Ambient temperature range (1	$\vartheta_{min./max.}$	°C	-10 to +60	-10 to +60	-10 to +60	-10 to +60
Medium temperature range (1	$\vartheta_{min./max.}$	°C	-10 to +60	-10 to +60	-10 to +60	-10 to +60
Medium			Filtered compressed air (30µ)			
Lubrication			With or without oil mist lubrication (2 (we recommend the use of mineral oil type VG 32 to ISO 3448)			
Pneumatic Characteristics						
Nominal pressure	$p_{min./max.}$	bar	6	6	6	6
Operating pressure range	$p_{min./max.}$	bar				
– Permanent signal range	$p_{min./max.}$	bar	0–10	2–10	2–10	2.2–10
Impulse range	$p_{min./max.}$	bar	–	1.5–10	1.5–10 (3	1.5–10 (3
– with external pilot air	$p_{min./max.}$	bar	–	0–10	0–10	0–10
Nominal flow	Q_N	l/min	37 (150 NW2.5)	500 (450 at 3/2 way valve)	1300(4	3500(5
Actuation						
Actuation pressure range						
– Permanent signal range	$p_{min./max.}$	bar	–	2–10	2–10	2.2–10
Impulse range	$p_{min./max.}$	bar	–	1.5–10	1.5–10 (3	1.5–10 (3
– with external pilot air	$p_{min./max.}$	bar	–	0–10	0–10	0–10
– **electrical**			direct			
piloted			–	●	●	●
piloted, with external pilot air			–	●	●	●

Piezo Electrical Actuation (6						
Approval			EU type test certificate DMT 01 ATEX E 026 X			
Category, type of protection			II 2G EEX ia IIC T4/T5/T6			
HOERBIGER Code			M	N	L	E
Voltage			DC			
Switching voltage	U	V/DC	6 – 9	7 – 16	12 – 24	24 – 30
Initial current	I	mA	–	–	–	1.6
Holding current	I	mA	1 – 2	2 – 5.5	1.5 – 3.5	0.24 – 0.3
Electrical protection			IP54			
Connection			Plug to DIN 43650A			
Safety data according to EU type test certificate						
Voltage	U_i	V	9	16	24	30
Current	I_i	mA	–	–	–	150
External capacitance	C_i	nF	12	12	12	12
External inductance	L_i	nH	120	120	120	120

Electrical, by EX solenoids					
Voltage			AC	DC	
Nominal voltage	U_n	V	220	24	other voltages on request
Switching energy		VA (W)	5.0	5.1	
Holding energy		VA (W)	5.0	5.1	
Electrical protection			IP 65 to DIN 40050 (with plug)		
Insulation material			E to VDE 0580		
Connection			Cable 1200 mm long		

(1 Note: when using below freezing point please contact our technical department.
(2 at piezo electrical piloted valve: filtered air (30µ), nor or minimal oil mist lubrication (max. 30mg/m³)
(3 at differential piston version 2.5 – 10 bar
(4 at version middle position exhausted 1000 l/min
(5 at version middle position exhausted 3300 l/min at version middle position pressurized 3600 l/min
(6 Not suitable as safety valve with 100% ED

Series S20 according to IS0 5599 Sizes 1, 2, 3

Characteristics	Symbol	Unit	Series S9 ISO 1	ISO 2	ISO 3
Actuation			**electrical piloted**	**electrical piloted**	**electrical piloted**
General Features					
Type			Ceramic spool valve		
Mounting			On base plate – to VDMA 24561 Gr. 01 and ISO 5599 Gr. 1, 2, 3		
Tube connection			Base plate		
Base plate-Thread			G1/4	G3/8	G1/2
Weight					
– Permanent signal range		kg	0.460	0.700	1.230
– Impulse range		kg	0.590	0.830	1.370
Installation			In any position		
Ambient temperature range (1	$\vartheta_{min./max.}$	°C	-10 to +60	-10 to +60	-10 to +60
Medium temperature range (1	$\vartheta_{min./max.}$	°C	-10 to +60	-10 to +60	-10 to +60
Medium			Filtered compressed air (30µ)		
Lubrication			With or without oil mist lubrication (2 (we recommend the use of mineral oil type VG 32 to ISO 3448)		
Pneumatic Characteristics					
Nominal pressure	$p_{min./max.}$	bar	6		
Operating pressure range	$p_{min./max.}$	bar			
– Permanent signal range	$p_{min./max.}$	bar	2–12	16 bar versions on request	
– Impulse range	$p_{min./max.}$	bar	2–12		
– with external pilot air	$p_{min./max.}$	bar	-1–12		
Nominal flow	Q_N	l/min	1380	3720	6660
Actuation					
Actuation pressure range – Permanent signal range	$p_{min./max.}$	bar	2–10	16 bar versions on request	
– Impulse range	$p_{min./max.}$	bar	2–10		
– with external pilot air	$p_{min./max.}$	bar	2–10		
electrical piloted				●	● ●
– with external pilot air				●	● ●

Piezo Electrical Actuation (3						
Approval			EU type test certificate DMT 01 ATEX E 025 X			
Category, type of protection			II 2G EEX ia IIC T4/T5/T6			
HOERBIGER Code			M	N	L	E
Voltage			DC			
Switching voltage	U	V/DC	6 – 9	7 – 16	12 – 24	24 – 30
Initial current	I	mA	–	–	–	1.6
Holding current	I	mA	1 – 2	2 – 5.5	1.5 – 3.5	0.24 – 0.3
Electrical protection			IP54			
Connection			Plug to DIN 43650A			
Safety data according to EU type test certificate						
Voltage	U_i	V	9	16	24	30
Current	I_i	mA	–	–	–	150
External capacitance	C_i	nF	12	12	12	12
External inductance	L_i	nH	120	120	120	120

Electrical, by EX solenoids					
Voltage			AC	DC	
Nominal voltage	U_n	V	220	24	other voltages on request
Switching energy		VA (W)	5.0	5.1	
Holding energy		VA (W)	5.0	5.1	
Electrical protection			IP 65 to DIN 40050 (with plug)		
Insulation material			E to VDE 0580		
Connection			Cable 1200 mm long		

(1 Note: when using below freezing point please contact our technical department.
(2 at piezo electrical piloted valve: filtered air (30µ), nor or minimal oil mist lubrication (max. 30mg/m³)
(3 Not suitable as safety valve with 100% ED

3/2 Way Poppet Valve Series P8 NW 1.6 and M5

Actuation:
– Piezo electric piloted

Versions
– Pilot valve NW1.6
– Single valve M5
– Manifold version M5
– Normally closed
– Normally open

Pilot Valve
Type: P8 381RF-NG(NO)-.

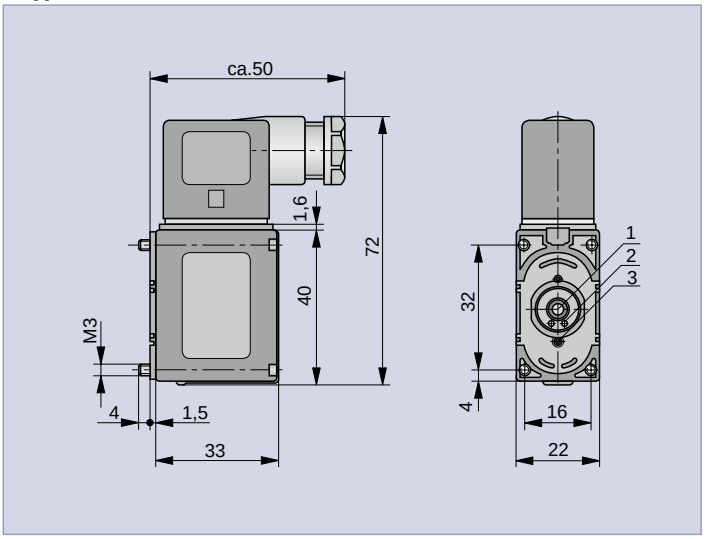

Single Valve
Type: P8 381RF-M5 NG(NO)-.

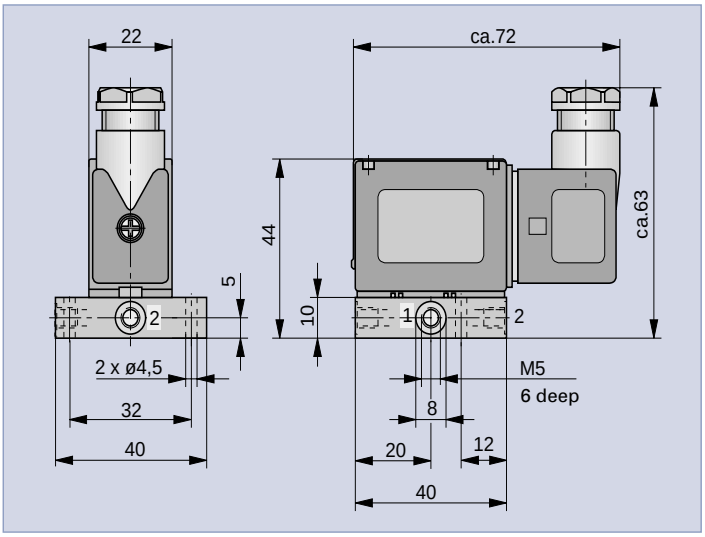

Manifold Version
Type: P8 381RF-M5 NG(NO)-S.

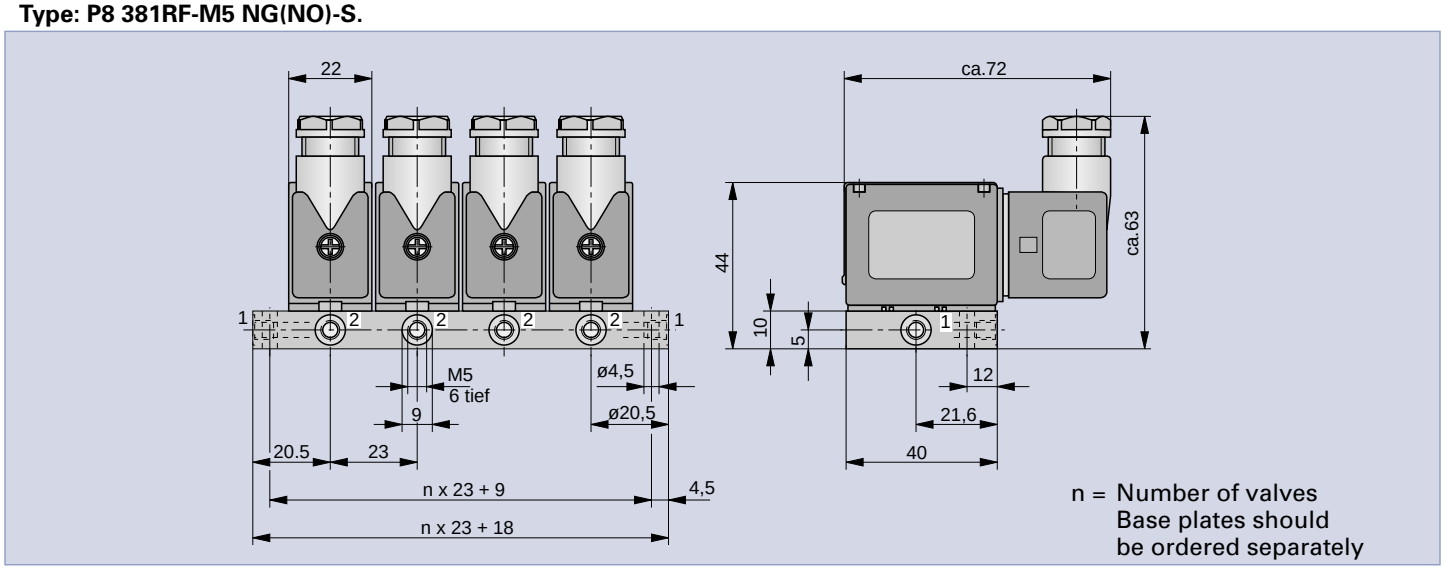

Order Instructions see page 22, Characteristics see page 27

Pilot Valve
Type: P20 381RF-NG(NO)-.

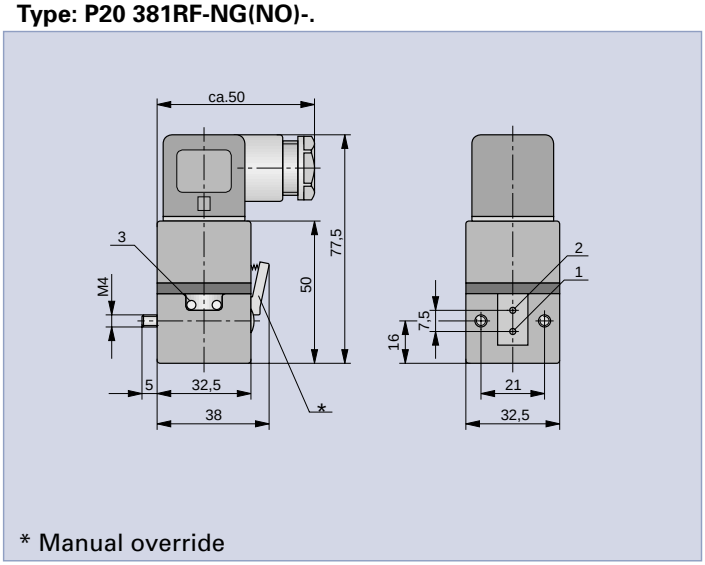

* Manual override

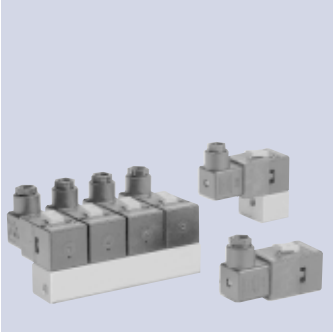

3/2 Way Poppet Valve Series P20 NW 2 and G1/8

Actuation:
– Piezo electric piloted

Versions
– Pilot valve NW2
– Single valve G1/8
– Manifold version G1/8
– Normally closed
– Normally open

Single Valve
Type: P20 381RF-1/8 NG(NO)-.

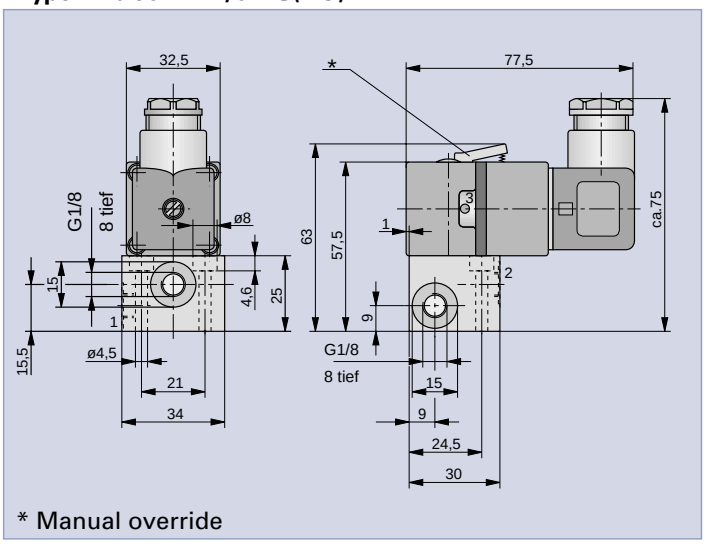

* Manual override

Manifold Version
Type: P20 381RF-1/8 NG(NO)-.

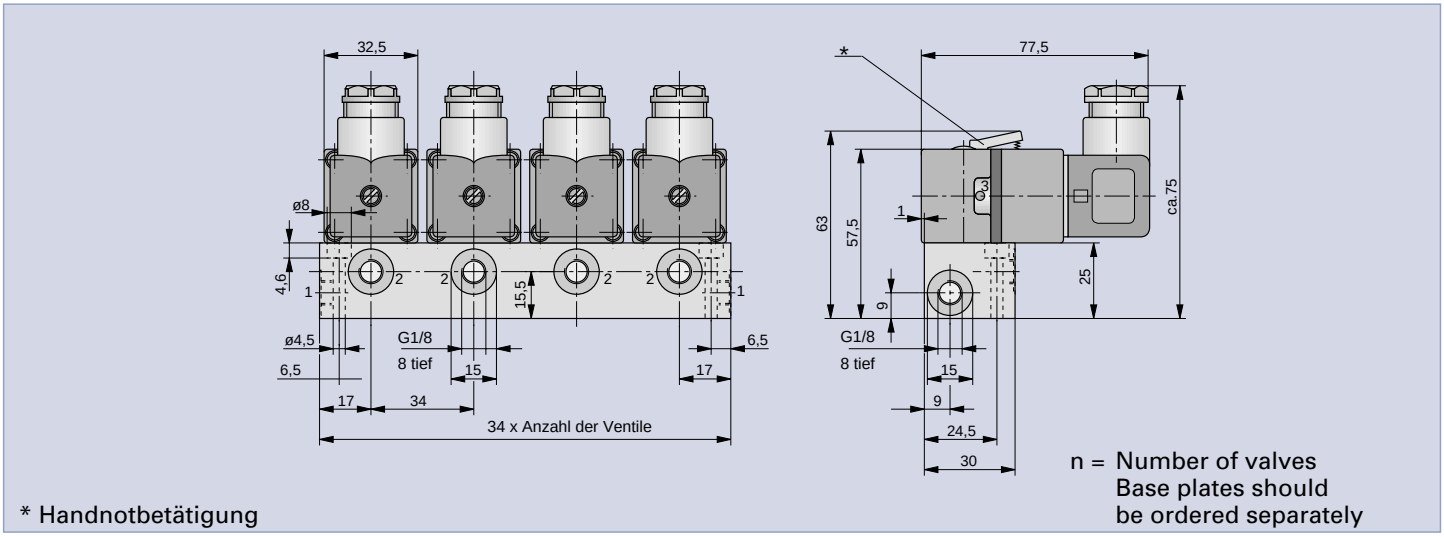

n = Number of valves
Base plates should be ordered separately

* Handnotbetätigung

Order Instructions see page 22, Characteristics see page 27

Dimensions in mm

Series S9 – intrinsically safe, piezo electrical actuated

3/2 Way Valve
Series S9
G1/4

Actuation:
– Piezo electric piloted

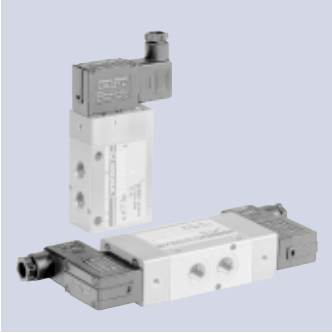

3/2 Way Valve
Type: S9 385RF-1/4-., S9 385-1/4-.

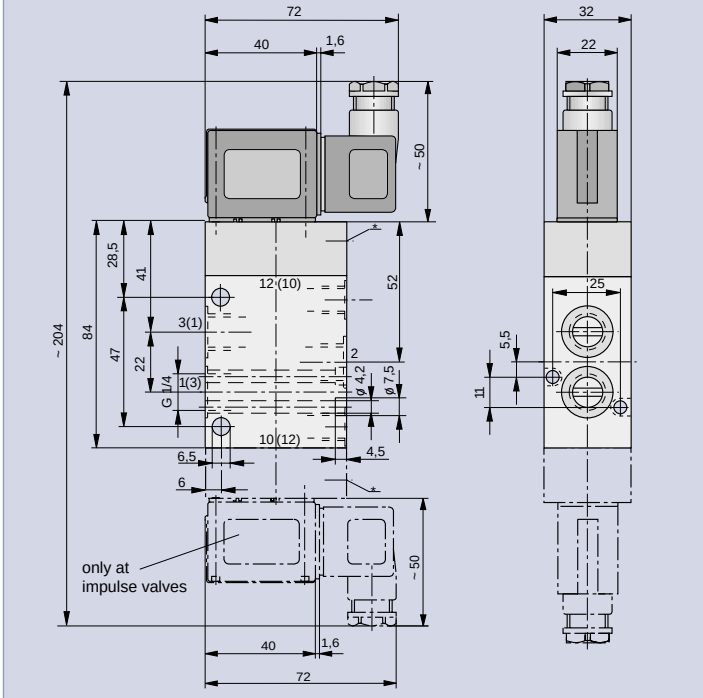

*Manual override

Weight (mass) kg

Description	Type	Weight (mass)
Electrical, by perm. signal	S9 585RF-1/4-..	0.500
Electrical, by impulse	S9 585-1/4-..	0.600

Order Instructions see page 23, Characteristics see page 28
P-Supply and RPS Manifolds see pages 43, 44, 47

5/2 Way Valve
Type: S9 585RF-1/8-., S9 585-1/8-.

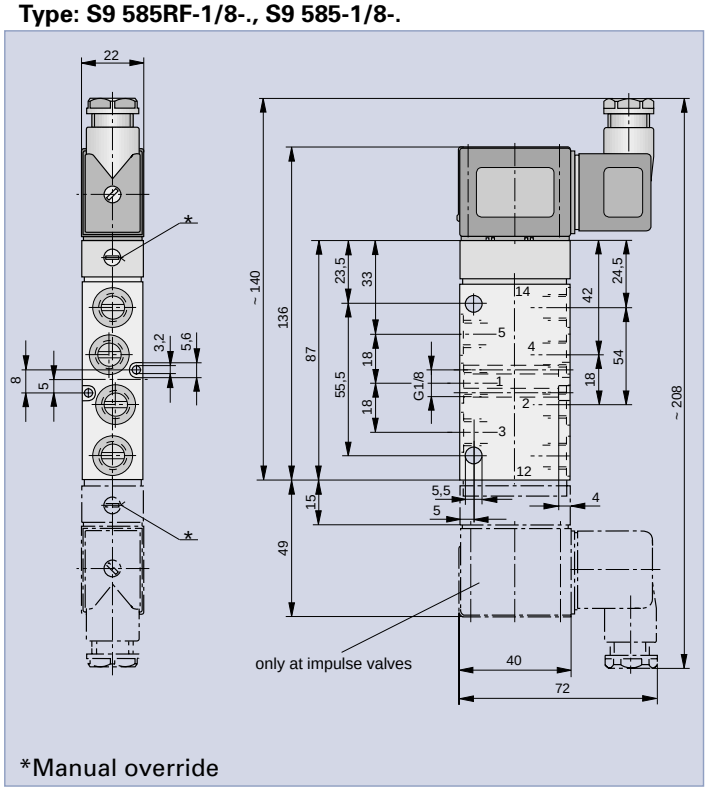

*Manual override

5/2 and 5/3 Way Valve Series S9 G1/8

Actuation:
– Piezo electric piloted

Weight (mass) kg

Description	Type	Weight (mass)
Electrical, by perm. signal	S9 585RF-1/8-..	0.245
Electrical, by impulse	S9 585-1/8-..	0.340
Electrical, by perm. signal *	S9 585RF.-1/8-..	0.340

* Middle position variants RFG, RFE, RFB

5/3 Way Valve
Type: S9 585RF.-1/8-.

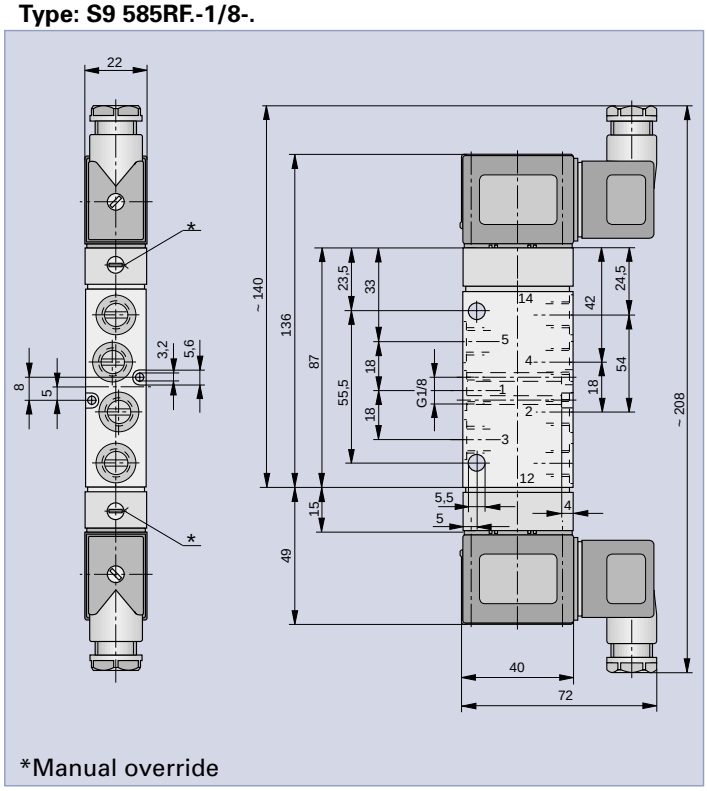

*Manual override

Order Instructions see page 23, Characteristics see page 28
P-Supply and RPS Manifolds see pages 41, 42, 46

5/2 and 5/3 Way Valve Series S9 G1/4

Actuation:
– Piezo electric piloted

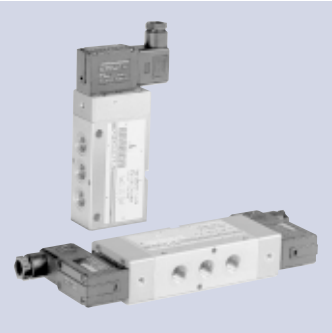

5/2 Way Valve
Type: S9 585RF-1/4-., S9 585-1/4-.

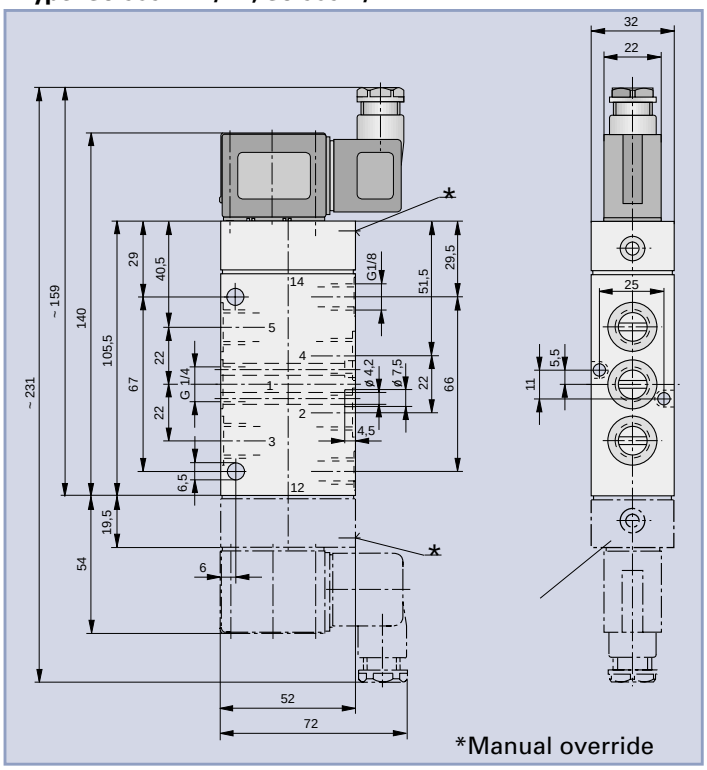

Weight (mass) kg

Description	Type	Weight (mass)
Electrical, by perm. signal	S9 585RF-1/4-..	0.550
Electrical, by impulse	S9 585-1/4-..	0.650
Electrical, by perm. signal *	S9 585RF.-1/4-..	0.620

* Middle position variants RFG, RFE, RFB

5/3 Way Valve
Type: S9 585RF.-1/4-.

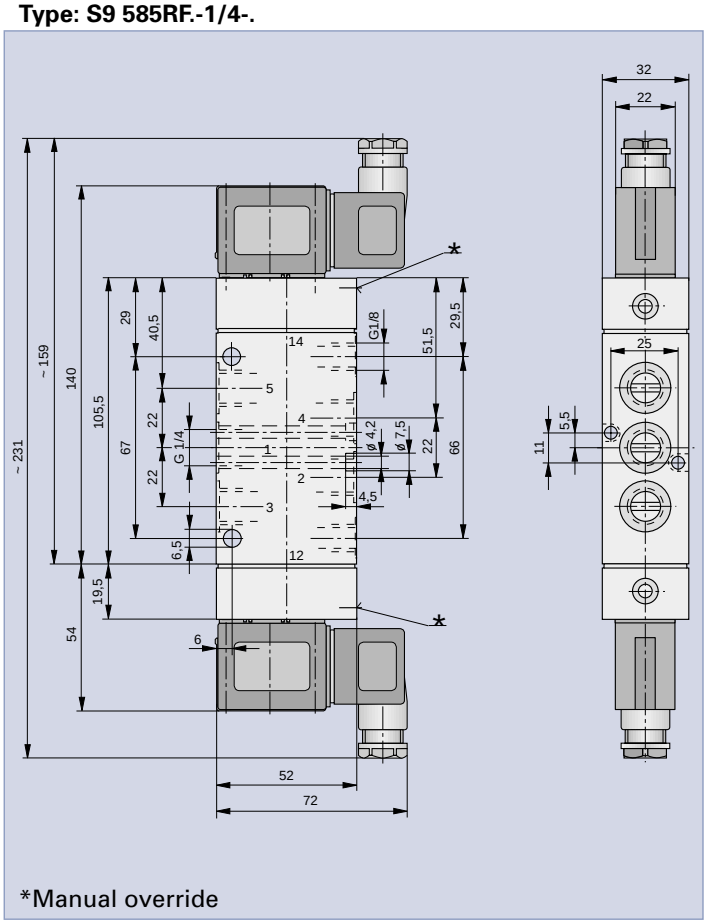

Order Instructions see page 23, Characteristics see page 28
P-Supply and RPS Manifolds see pages 43, 44, 47

5/2 and 5/3 Way Valve to ISO 5599 Size 1
Type: S20 585..-1-.., S20 585RF.-1-..

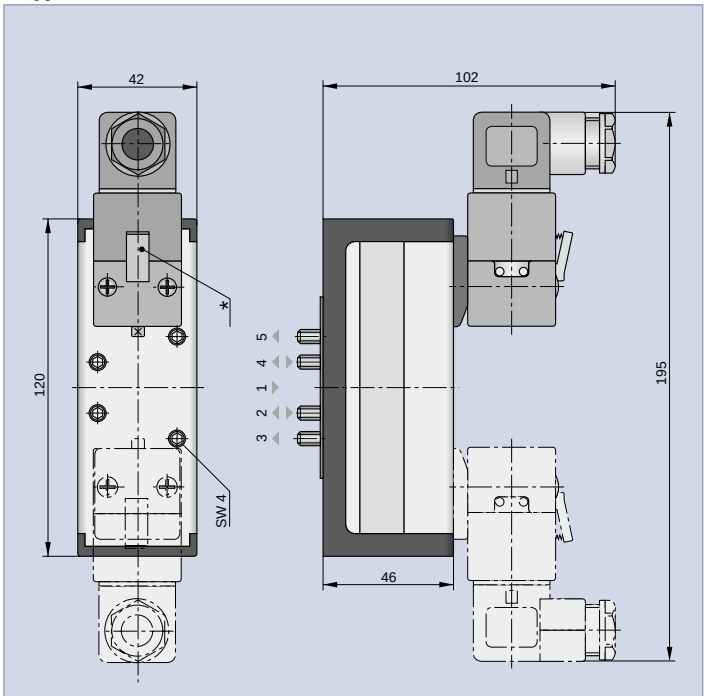

*Manual override

5/2 and 5/3 Way Valve Series S20 to ISO 5599 Sizes 1, 2, 3

Actuation:
– Piezo electric piloted

Weight (mass) kg

Description	Type	Weight (mass)
Electrical, by perm. signal	S20 585RF(R)-1-..	0.460
Electrical, by impulse	S20 585-1-..	0.590
Electrical, by perm. signal *	S20 585RF.-1-..	0.590
Electrical, by perm. signal	S20 585RF(R)-2-..	0.700
Electrical, by impulse	S20 585-2-..	0.830
Electrical, by perm. signal *	S20 585RF.-2-..	0.830
Electrical, by perm. signal	S20 585RF(R)-3-..	1.230
Electrical, by impulse	S20 585-3-..	1.370
Electrical, by perm. signal *	S20 585RF.-3-..	1.370

* Middle position variants RFG, RFE, RFB

5/2 and 5/3 Way Valve to ISO 5599 Size 2
Type: S20 585..-2-.., S20 585RF.-2-..

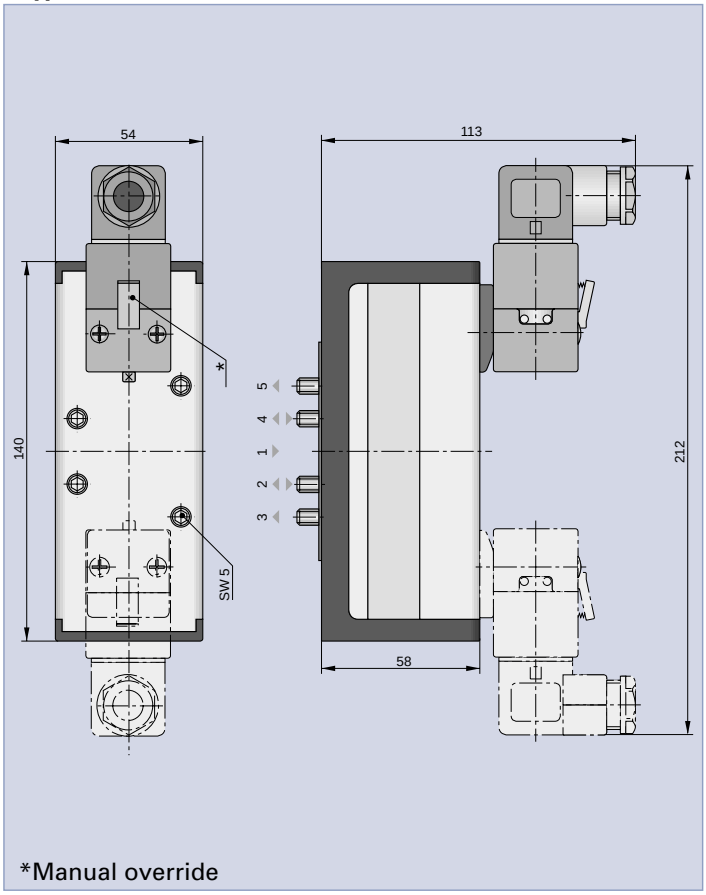

*Manual override

5/2 and 5/3 Way Valve to ISO 5599 Size 3
Type: S20 585..-3-.., S20 585RF.-3-..

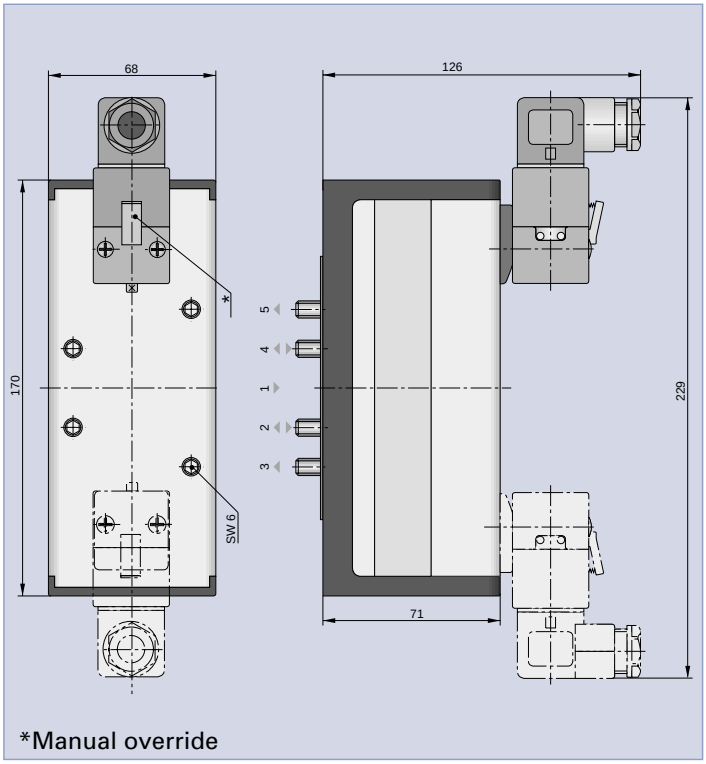

*Manual override

Order Instructions see page 23, Characteristics see page 29
Base Plates see pages 48-51

Dimensions in mm

Series V9 – with EEx m-Solenoids

3/2 Way Valve Series V9 NW 1.3

EEx m Solenoids
– Electrical, direct piloted

Type: V9 381RF-1/8NG (NO)– NW 1.3
Type: V9 381H-RF-1/8NG (NO)– NW 1.3

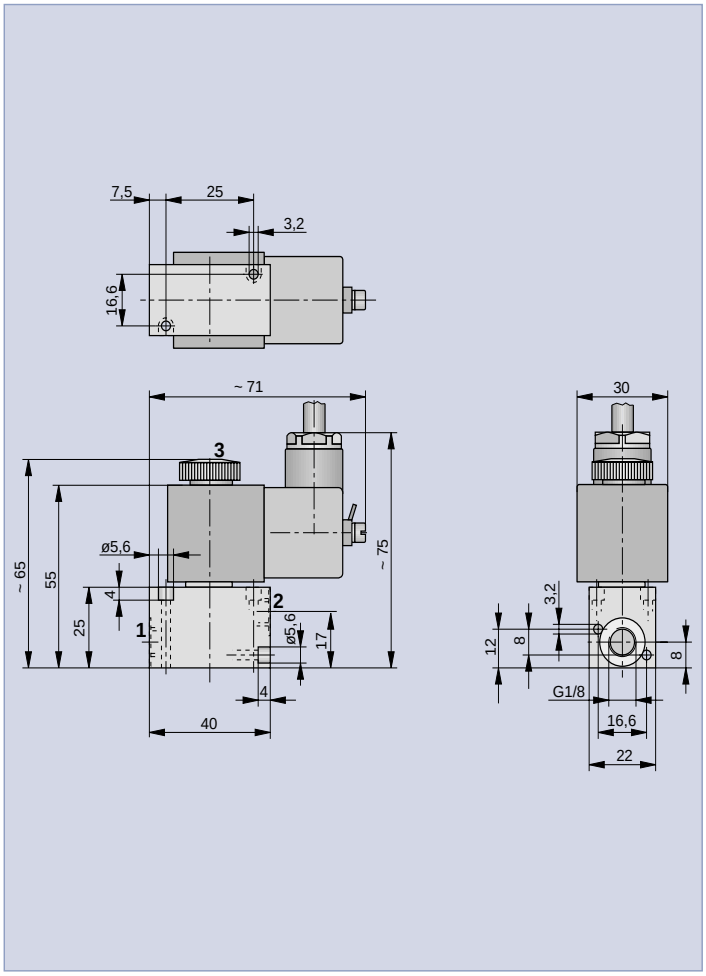

Accessories for P-Supply Manifolds

Description	for NW	**Order No.**
O-ring 10x2	1.3	**88-37H643-75**
Screw M3x40	1.3	**ZP3986**
P-supply manifolds PL-1/8-..	1.3	**PD32763-....***
P-supply manifolds PLK-1/8-..	1.3	**PD37174-....***

* Add number of valve positions to order no.

Order Instructions see page 24, Characteristics see page 28

Electrical pilot operation
Type: S9 381(S)-1/8, S9 381(S)RF-1/8

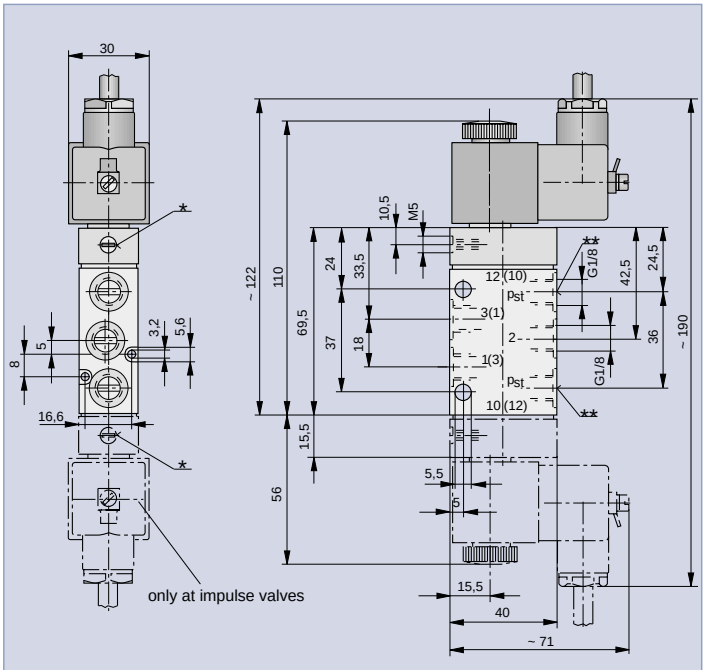

* Manual override
** Only at versions with external pilot air

Electrical pilot operation
Type: S9 381(S)-1/4, S9 382(S)-1/4, S9 381(S)RF-1/4

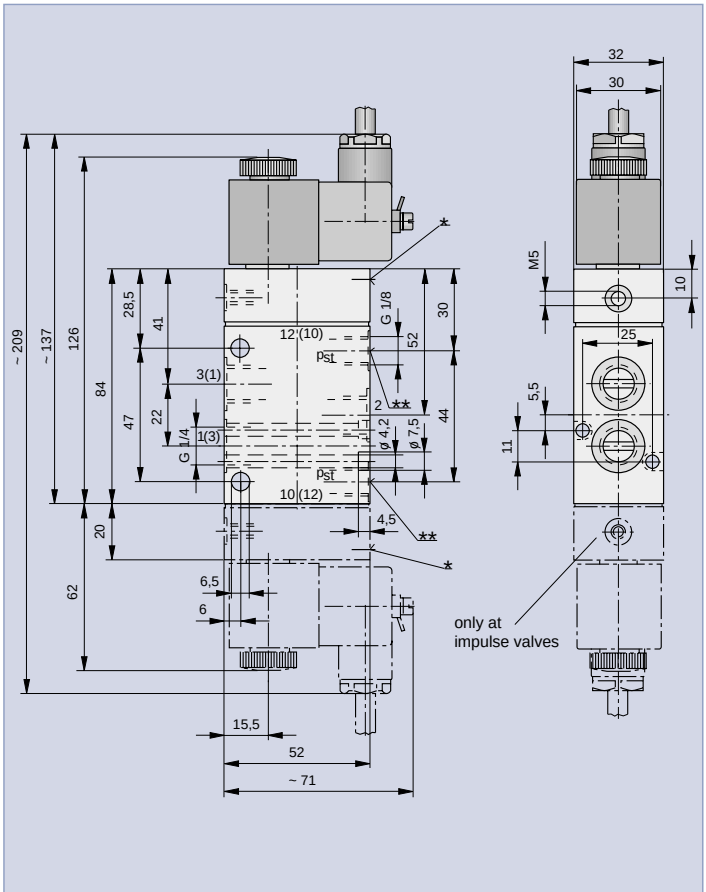

* Manual override
** Only at versions with external pilot air

3/2 Way Valve Series S9 G1/8, G1/4, G1/2

Actuation:
EEx m Solenoids
– Electrical pilot operation
– Electrical pilot operation with external pilot air

Note:
If mounted to a P-supply manifold, the option of specifying valve S9 381S-RF-1/8 as "normally open" is not available

Versions
– Normally closed
– Normally open
– With external pilot air

Weight (mass) kg

Description	Type	Weight (mass)
Electrical, by permanent signal	S9 381(S)RF-1/8	0.247
Electrical, by impulse	S9 381(S)-1/8	0.382
Electrical, by permanent signal	S9 381(S)RF-1/4	0.500
Electrical, by impulse	S9 381(S)-1/4	0.600
– with differential piston	S9 382(S)-1/4	0.600
Electrical, by permanent signal	S9 381(S)RF-1/2	0.815
Electrical, by impulse	S9 381(S)-1/2	1.100
– with differential piston	S9 382(S)-1/2	1.100

Electrical pilot operation
Type: S9 381(S)-1/2, S9 382(S)-1/2, S9 381(S)RF-1/2

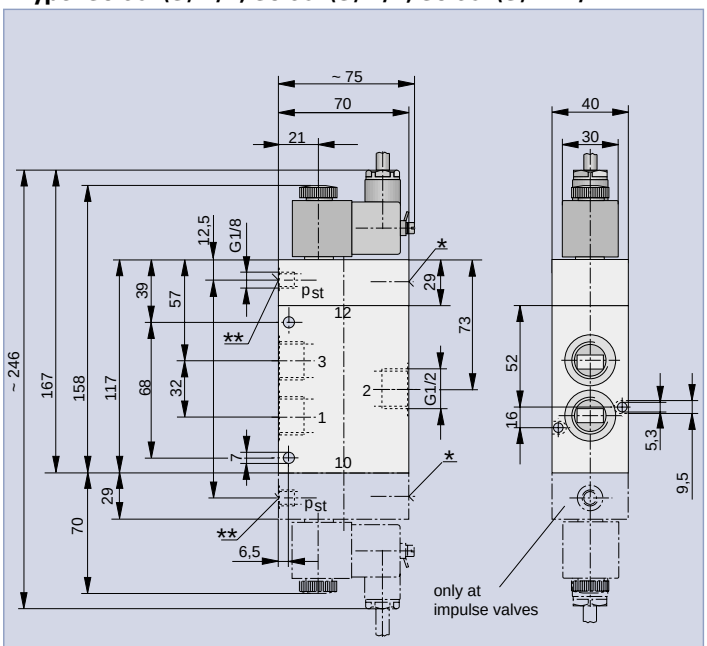

* Manual override
** Only at versions with external pilot air

Order Instructions see page 24, Characteristics see page 28
P-Supply and RPS Manifolds see pages 41-47

Dimensions in mm

5/2 Way Valve Series S9 G1/8, G1/4, G1/2

Actuation:
EEx m Solenoids
– Electrical pilot operation
– Electrical pilot operation with external pilot air

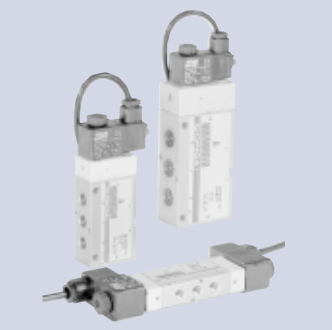

Versions
– With external pilot air

Weight (mass) kg

Description	Type	Weight (mass)
Electrical, by permanent signal	S9 581(S)RF-1/8	0.280
Electrical, by impulse	S9 581(S)-1/8	0.415
Electrical, by permanent signal	S9 581(S)RF-1/4	0.600
Electrical, by impulse	S9 581(S)-1/4	0.700
– with differential piston	S9 582(S)-1/4	0.700
Electrical, by permanent signal	S9 581(S)RF-1/2	1.000
Electrical, by impulse	S9 581(S)-1/2	1.270
– with differential piston	S9 582(S)-1/2	1.270

Electrical pilot operation
Type: S9 581(S)-1/4, S9 582(S)-1/4, S9 581(S)RF-1/4

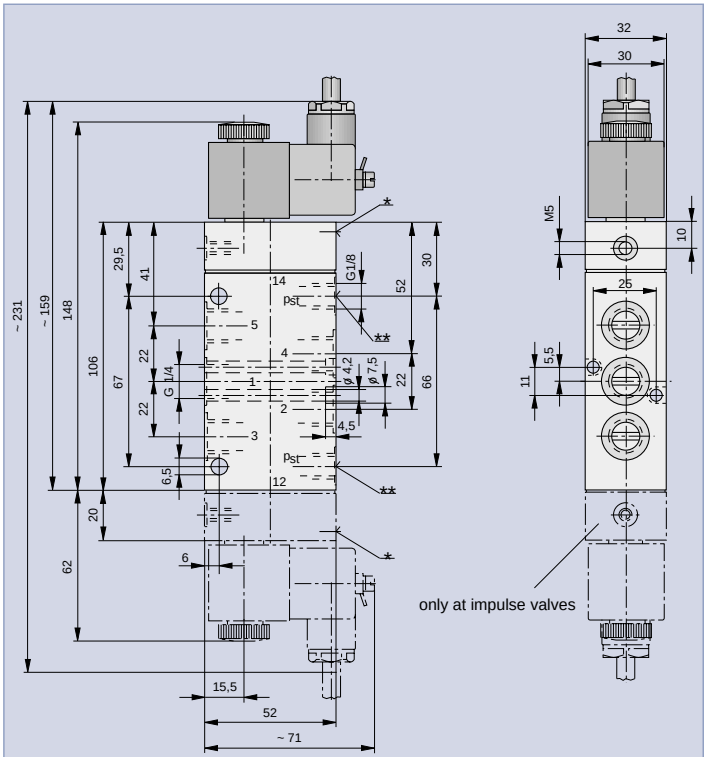

* Manual override
** Only at versions with external pilot air

Electrical pilot operation
Type: S9 581(S)-1/8, S9 581(S)RF-1/8

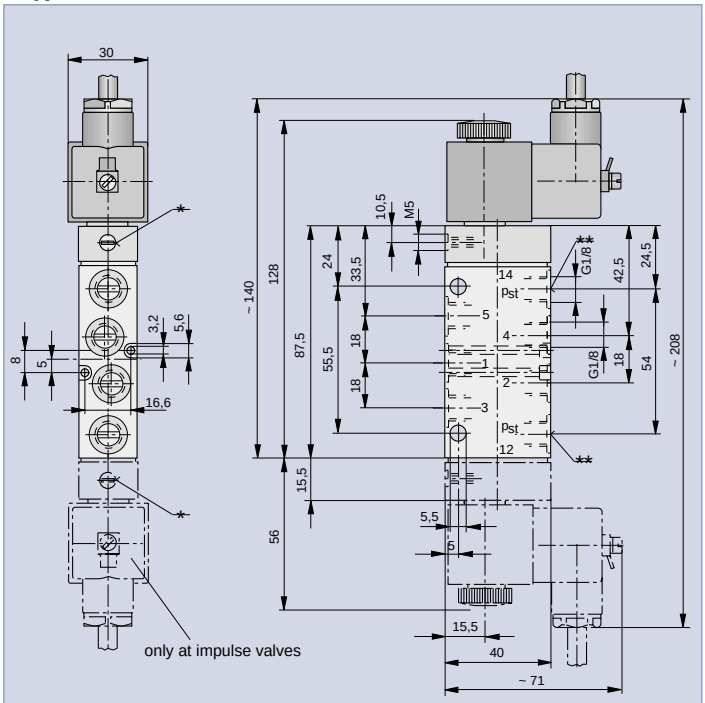

* Manual override
** Pilot connection p_{st} only at type S9 381S

Electrical pilot operation
Type: S9 581(S)-1/2, S9 582(S)-1/2, S9 581(S)RF-1/2

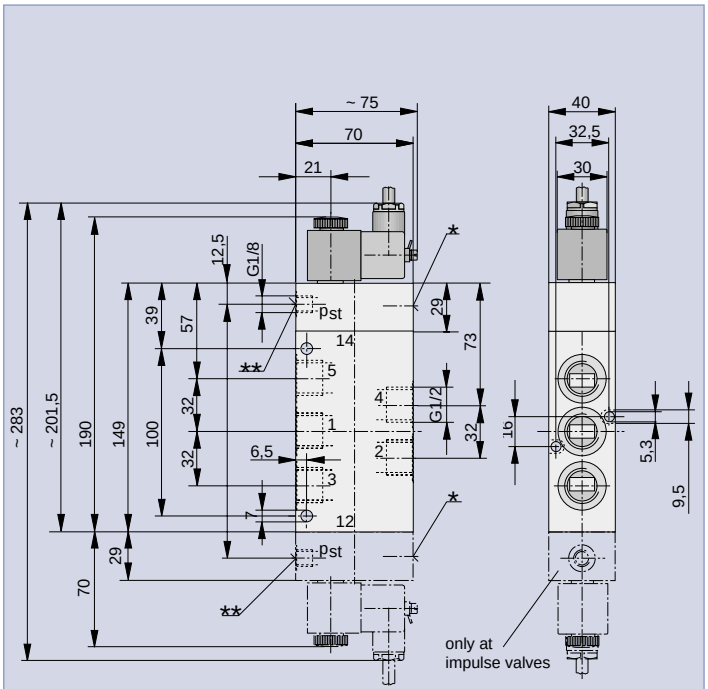

* Manual override
** Only at versions with external pilot air

Order Instructions see page 24, Characteristics see page 28
P-Supply and RPS Manifolds see pages 41-47

Electrical pilot operation
Type: S9 581RF.-1/8

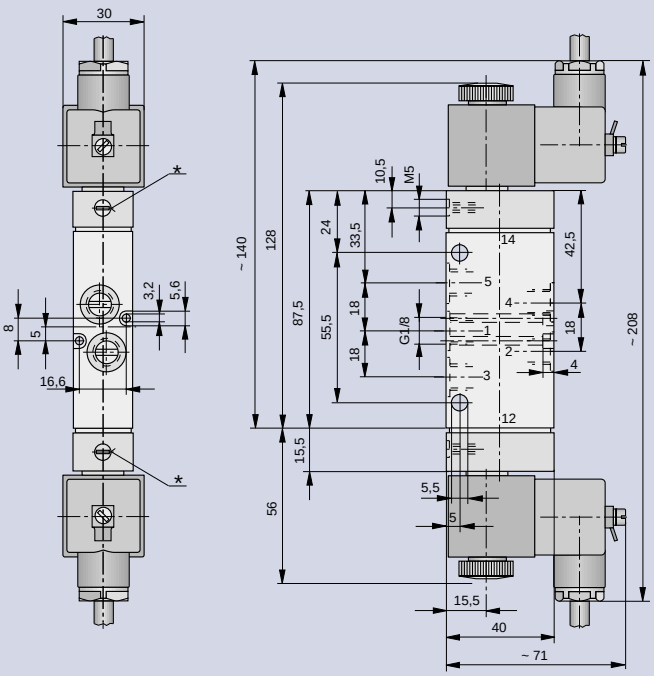

* Manual override
** Only at versions with external pilot air

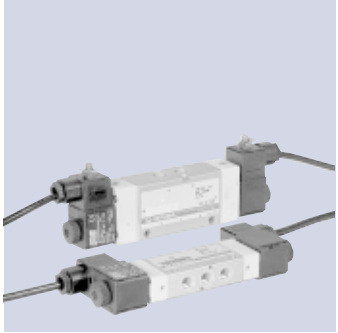

5/3 Way Valve Series S9 G1/8, G1/4, G1/2

Actuation:
EEx m Solenoids
– Electrical pilot operation
– Electrical pilot operation with external pilot air

Weight (mass) kg

Description	Type	Weight (mass)
Electrical, by permanent signal *	S9 581RF.-1/8	0.247
Electrical, by permanent signal *	S9 581RF.-1/4	0.500
Electrical, by permanent signal *	S9 581RF.-1/2	0.770

* Middle position variants RFG, RFE, RFB

Electrical pilot operation
Type: S9 581RF.-1/4

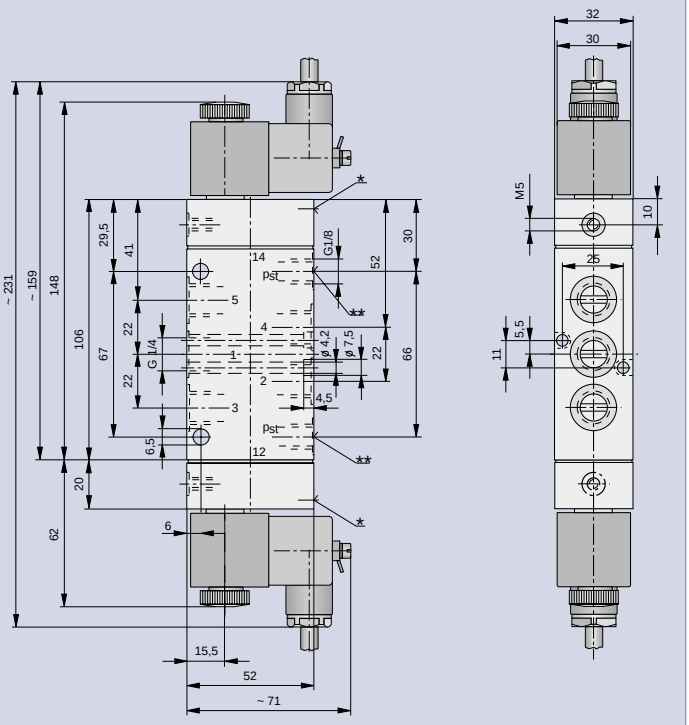

* Manual override
** Only at versions with external pilot air

Electrical pilot operation
Type: S9 581RF.-1/2

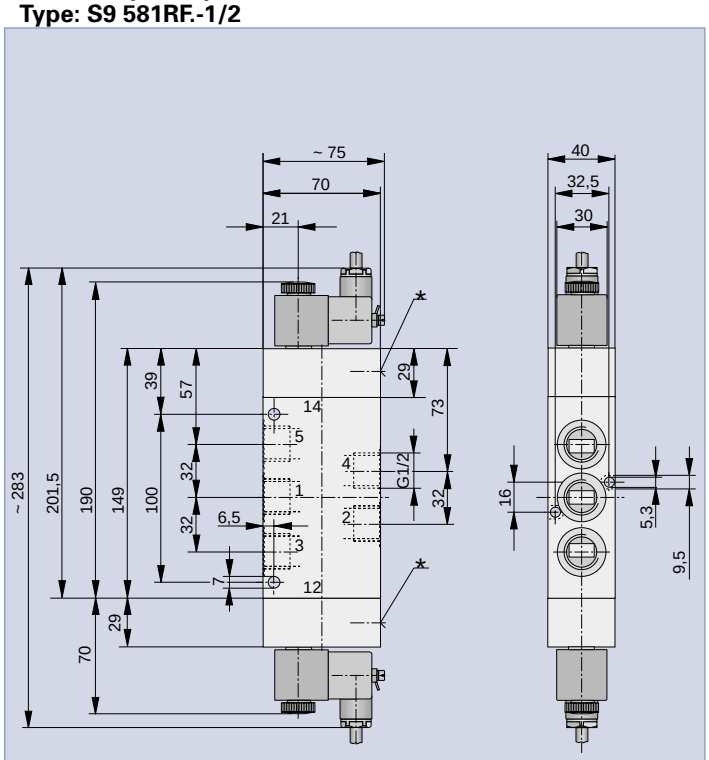

* Manual override

Order Instructions see page 24, Characteristics see page 28
P-Supply and RPS Manifolds see pages 41-47

5/2 and 5/3 Way Valve Series S20 to ISO 5599 Sizes 1, 2, 3

Actuation:
EEx m Solenoids
–Electrical pilot operation

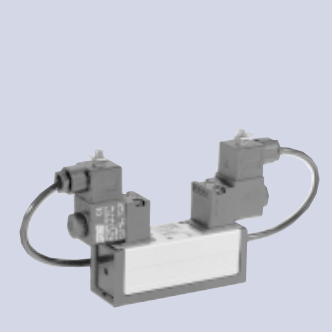

5/2 and 5/3 Way Valve to ISO 5599 Size 2
Type: S20 581..-2-.., S20 581RF.-2-..

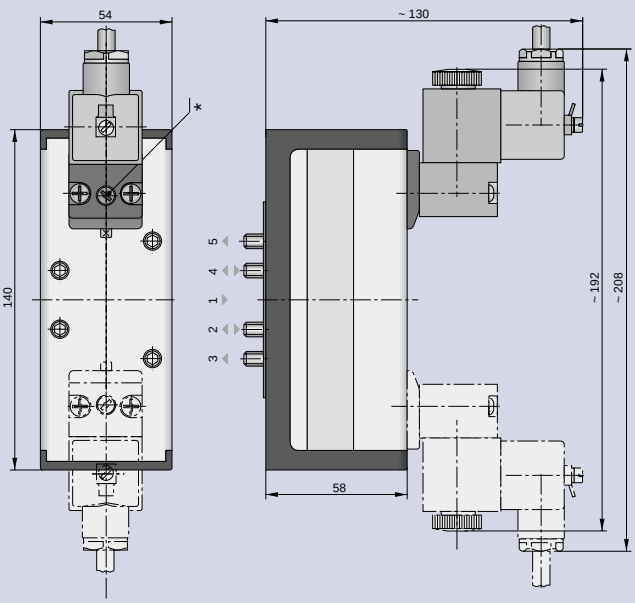

* Manual override

Weight (mass) kg

Description	Type	Weight (mass)
Electrical, by perm. signal	S20 581RF(R)-1-..	0.460
Electrical, by impulse	S20 581-1-..	0.590
Electrical, by perm. signal *	S20 581RF.-1-..	0.590
Electrical, by perm. signal	S20 581RF(R)-2-..	0.700
Electrical, by impulse	S20 581-2-..	0.830
Electrical, by perm. signal *	S20 581RF.-2-..	0.830
Electrical, by perm. signal	S20 581RF(R)-3-..	1.230
Electrical, by impulse	S20 581-3-..	1.370
Electrical, by perm. signal *	S20 581RF.-3-..	1.370

* Middle position variants RFG, RFE, RFB

5/2 and 5/3 Way Valve to ISO 5599 Size 1
Type: S20 581..-1-.., S20 581RF.-1-..

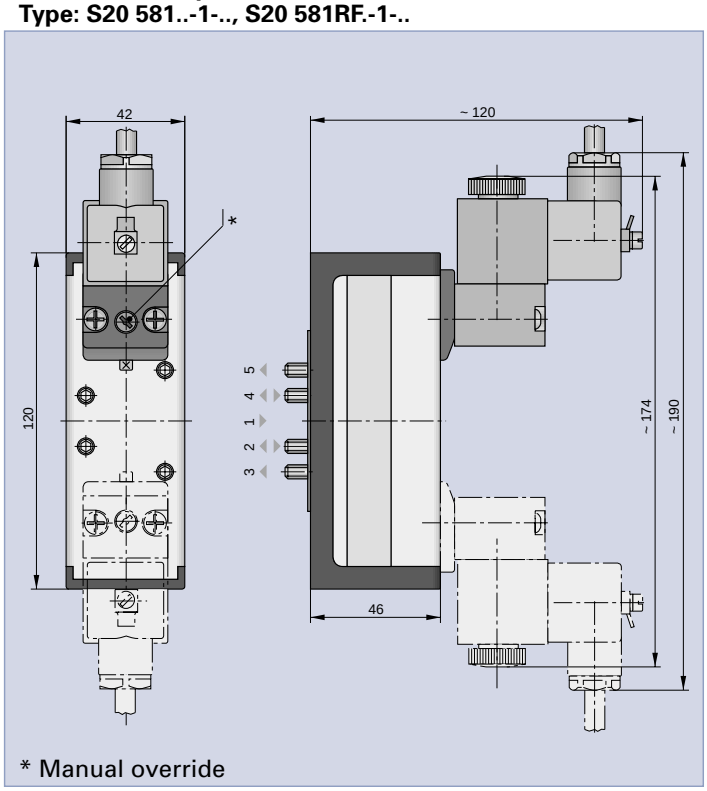

* Manual override

5/2 and 5/3 Way Valve to ISO 5599 Size 3
Type: S20 581..-3-.., S20 581RF.-3-..

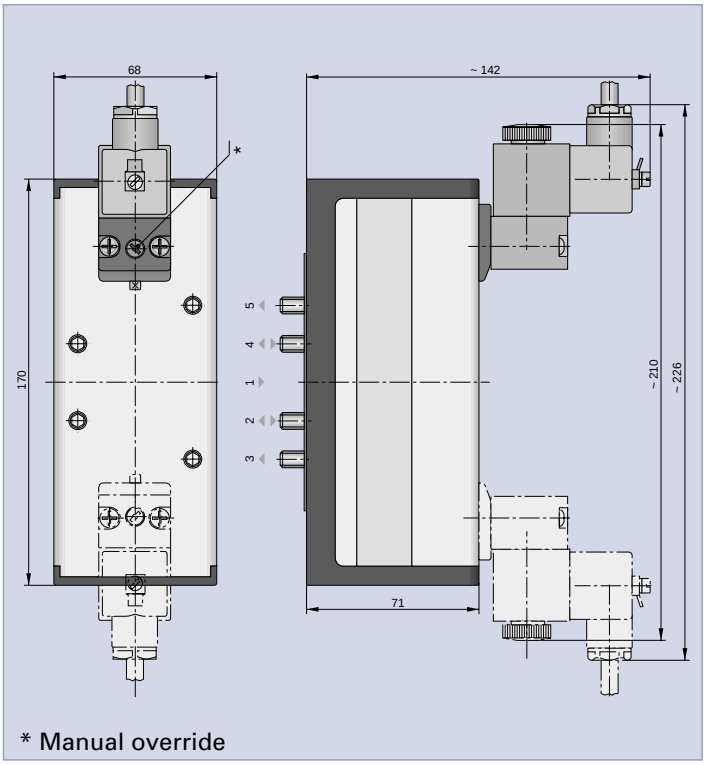

* Manual override

Order Instructions see page 26, Characteristics see page 29
Base Plates see pages 48-51

P-Supply Manifolds for Directional Valves, Series S9-1/8

Series PL-1/8-..

Material

Description	Material
P-supply manifold	Al, anodized
Mounting bracket	Steel, passivated
Screws	Galvanized steel
O-ring	Oil-resistant rubber

Accessories

Description	**Order No.**
Complete cover plate	**PD 34694**
Flow divider	**PD 42483**

P-Supply Manifolds for Way Valve Series S9-1/8

Versions
– Type PLK-1/8
(short mounting bracket)
– Type PL-1/8
(long mounting bracket)

P-Supply Manifold
Type: PLK-1/8-..

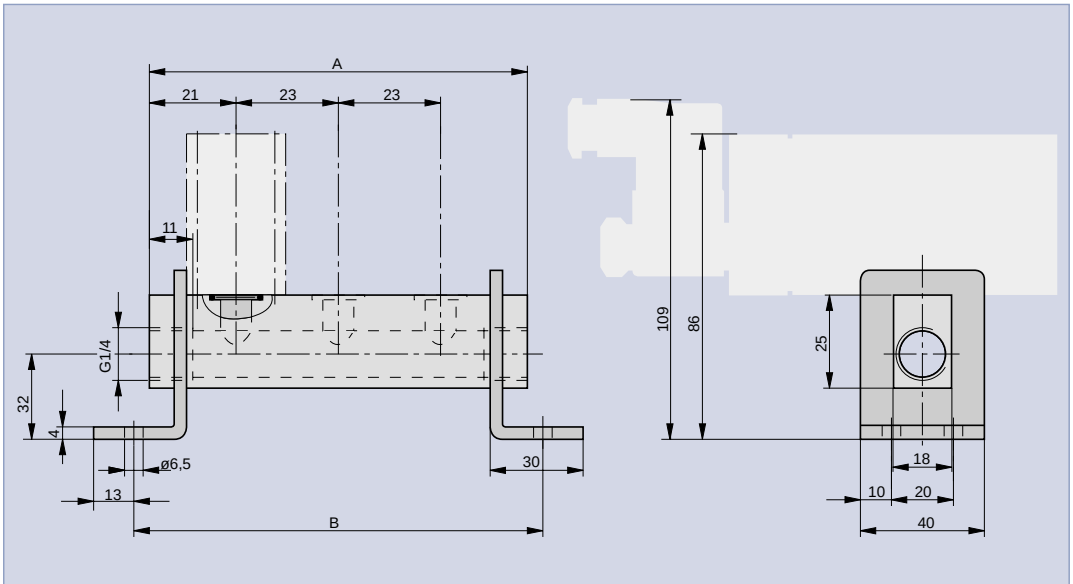

Drawing shows: PLK-1/8-3

P-supply manifolds reduce and simplify tubing.
They allow a compact and clear design.
3/2, 5/2 and 5/3 directional valves with different types of actuation can be mounted in groups of 2-10 pieces.

The use of impulse solenoid valves is only possible with P-supply manifold type PLK-..

The delivery includes
P-supply manifold
Mounting bracket
Mounting screws
O-rings

Dimensions, Order Instructions and Weight (mass)

Type	**Order No.**	No. of valves	Dim. A	Dim. B	consisting of Manif.	Bracket	Screw	O-ring	Weight (kg)
PLK-1/8-2	**PD 37174-0002**	2	65	79	1	2	4	2	0.28
PLK-1/8-3	**PD 37174-0003**	3	88	102	1	2	6	3	0.31
PLK-1/8-4	**PD 37174-0004**	4	111	125	1	2	8	4	0.34
PLK-1/8-5	**PD 37174-0005**	5	134	148	1	2	10	5	0.37
PLK-1/8-6	**PD 37174-0006**	6	157	171	1	2	12	6	0.40
PLK-1/8-7	**PD 37174-0007**	7	180	194	1	2	14	7	0.43
PLK-1/8-8	**PD 37174-0008**	8	203	217	1	2	16	8	0.47
PLK-1/8-9	**PD 37174-0009**	9	226	240	1	2	18	9	0.50
PLK-1/8-10	**PD 37174-0010**	10	249	263	1	2	20	10	0.53

Dimensions in mm

Series PL-1/8-..

P-Supply Manifold
Type: PL-1/8-..

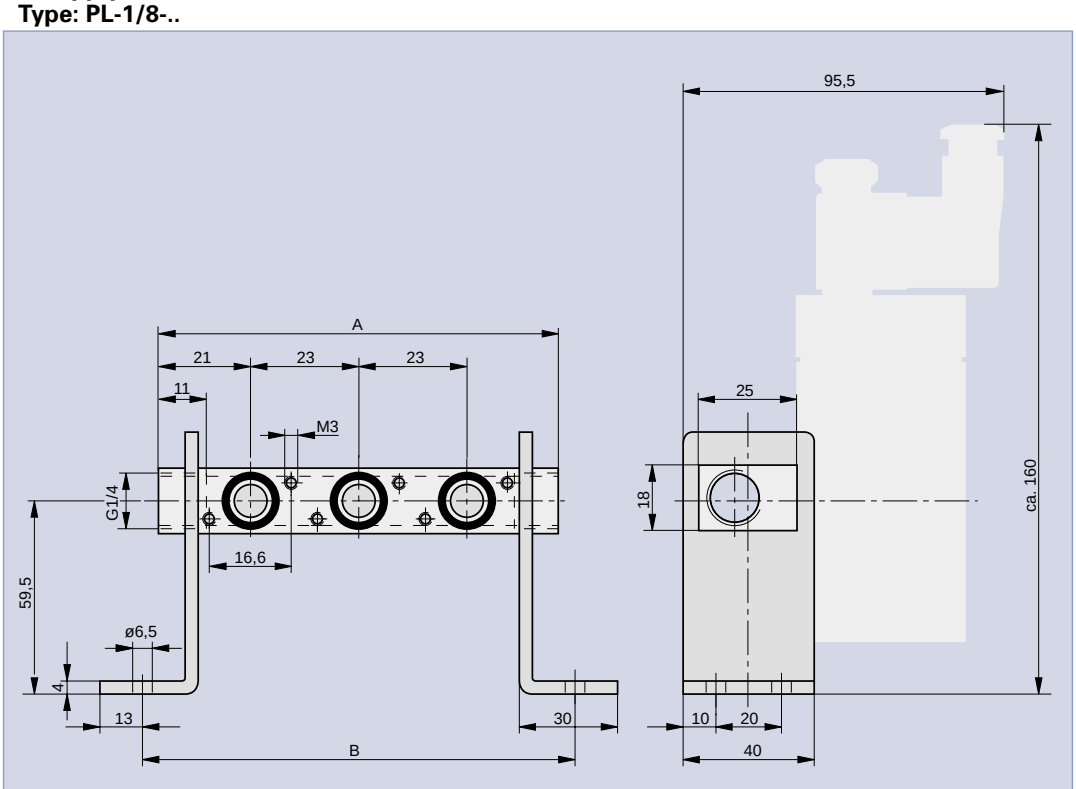

Drawing shows: PL-1/8-3

Dimensions, Order Instructions and Weight (mass)

Type	Order No.	No. of valves	Dim. A	Dim. B	consisting of Manif.	Bracket	Screw	O-ring	Weight (kg)
PL-1/8-2	**PD 32763-0002**	2	65	79	1	2	4	2	0.28
PL-1/8-3	**PD 32763-0003**	3	88	102	1	2	6	3	0.31
PL-1/8-4	**PD 32763-0004**	4	111	125	1	2	8	4	0.34
PL-1/8-5	**PD 32763-0005**	5	134	148	1	2	10	5	0.37
PL-1/8-6	**PD 32763-0006**	6	157	171	1	2	12	6	0.40
PL-1/8-7	**PD 32763-0007**	7	180	194	1	2	14	7	0.43
PL-1/8-8	**PD 32763-0008**	8	203	217	1	2	16	8	0.47
PL-1/8-9	**PD 32763-0009**	9	226	240	1	2	18	9	0.50
PL-1/8-10	**PD 32763-0010**	10	249	263	1	2	20	10	0.53

Material

Description	Material
P-supply manifold	Al, anodized
Mounting bracket	Steel, passivated
Screws	Galvanized steel
O-ring	Oil-resistant rubber

Accessories

Description	**Order No.**
Complete cover plate	**PD 34695**
Flow divider	**PD 42516**

P-Supply Manifolds for Way Valve Series S9-1/4

Versions
– Type PLK-1/4
(short mounting bracket)
– Type PL-1/4
(long mounting bracket)

P-Supply Manifold
Type: PLK-1/8-..

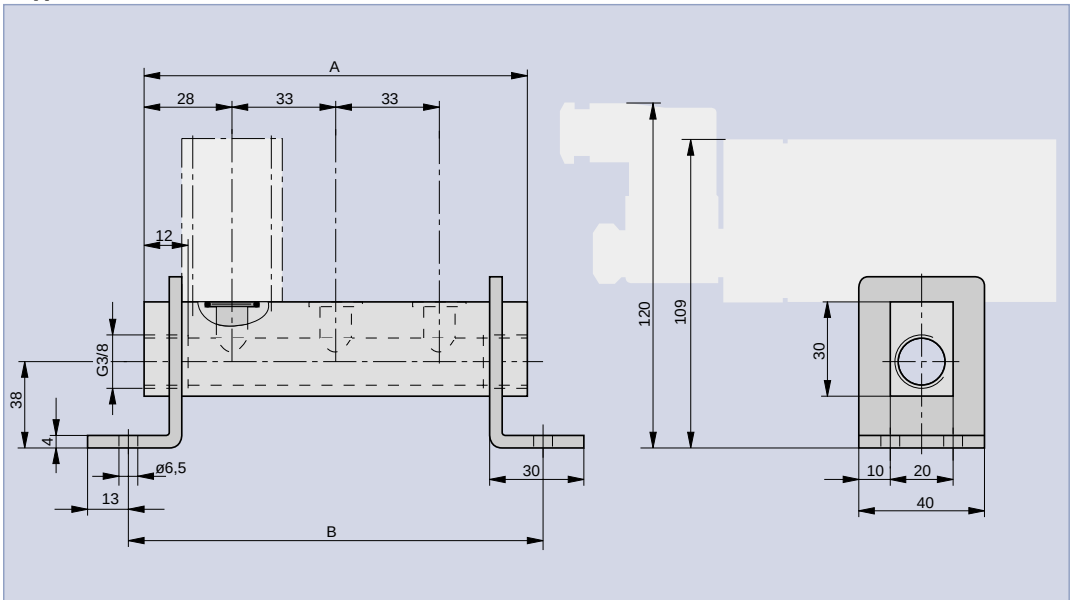

Drawing shows: PLK-1/4-3

P-supply manifolds reduce and simplify tubing.
They allow a compact and clear design.
3/2, 5/2 and 5/3 directional valves with different types of actuation can be mounted in groups of 2-10 pieces.

The use of impulse solenoid valves is only possible with P-supply manifold type PLK-..

The delivery includes
P-supply manifold
Mounting bracket
Mounting screws
O-rings

Dimensions, Order Instructions and Weight (mass)

Type	**Order No.**	No. of valves	Dim. A	Dim. B	consisting of Manif.	Bracket	Screw	O-ring	Weight (kg)
PLK-1/4-2	**PD 37175-0002**	2	89	99	1	2	4	2	0.31
PLK-1/4-3	**PD 37175-0003**	3	122	132	1	2	6	3	0.35
PLK-1/4-4	**PD 37175-0004**	4	155	165	1	2	8	4	0.39
PLK-1/4-5	**PD 37175-0005**	5	188	198	1	2	10	5	0.43
PLK-1/4-6	**PD 37175-0006**	6	221	231	1	2	12	6	0.47
PLK-1/4-7	**PD 37175-0007**	7	254	264	1	2	14	7	0.51
PLK-1/4-8	**PD 37175-0008**	8	287	297	1	2	16	8	0.55
PLK-1/4-9	**PD 37175-0009**	9	320	330	1	2	18	9	0.59
PLK-1/4-10	**PD 37175-0010**	10	353	363	1	2	20	10	0.63

Dimensions in mm

Series PL-1/4-..

P-Supply Manifold
Type: PL-1/4-..

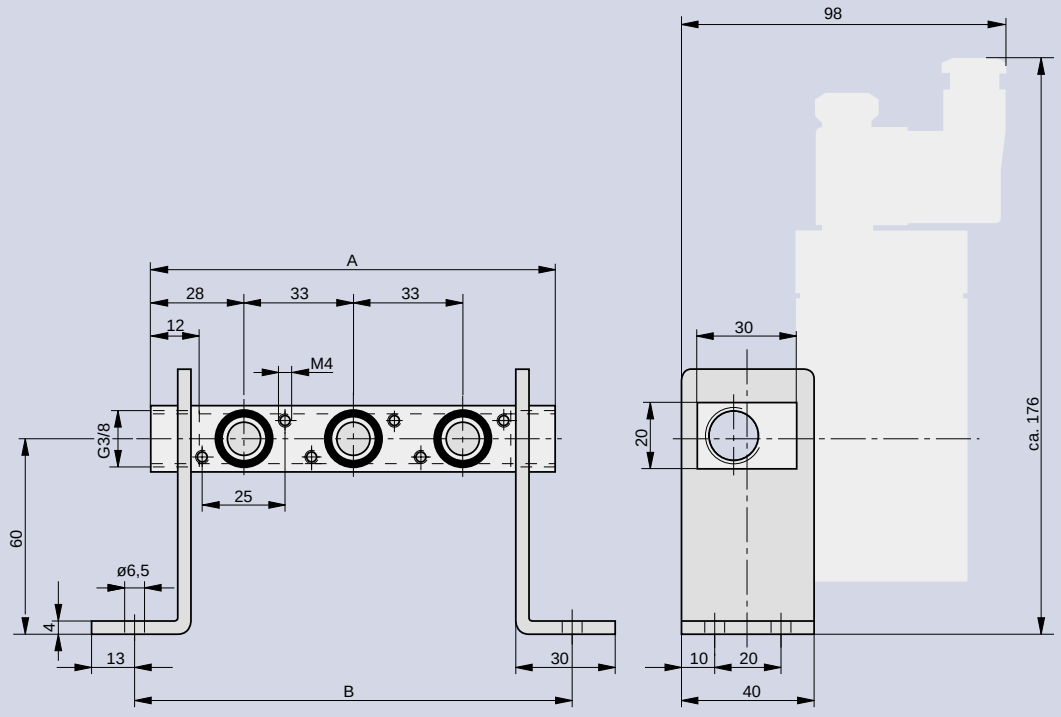

Drawing shows: PL-1/4-3

Dimensions, Order Instructions and Weight (mass)

Type	Order No.	No. of valves	Dim. A	Dim. B	consisting of Manif.	Bracket	Screw	O-ring	Weight (kg)
PL-1/4-2	**PD 32765-0002**	2	89	99	1	2	4	2	0.31
PL-1/4-3	**PD 32765-0003**	3	122	132	1	2	6	3	0.35
PL-1/4-4	**PD 32765-0004**	4	155	165	1	2	8	4	0.39
PL-1/4-5	**PD 32765-0005**	5	188	198	1	2	10	5	0.43
PL-1/4-6	**PD 32765-0006**	6	221	231	1	2	12	6	0.47
PL-1/4-7	**PD 32765-0007**	7	254	264	1	2	14	7	0.51
PL-1/4-8	**PD 32765-0008**	8	287	297	1	2	16	8	0.55
PL-1/4-9	**PD 32765-0009**	9	320	330	1	2	18	9	0.59
PL-1/4-10	**PD 32765-0010**	10	353	363	1	2	20	10	0.63

Material

Description	Material
P-supply manifold	Al, anodized
Mounting bracket	Steel, passivated
Screws	Galvanized steel
O-ring	Oil-resistant rubber

Accessories

Description	**Order No.**
Complete cover plate	**PD 39138**
Flow divider	**PD 40012**

P-Supply Manifolds for Way Valve Series S9-1/2

Versions
– Type PL-1/2
(short mounting bracket)

P-supply manifolds reduce and simplify tubing.
They allow a compact and clear design.
3/2, 5/2 and 5/3 directional valves with different types of actuation can be mounted in groups of 2-4 pieces.

The delivery includes
P-supply manifold
Mounting bracket
Mounting screws
O-rings

P-Supply Manifold
Type: PL-1/2-.

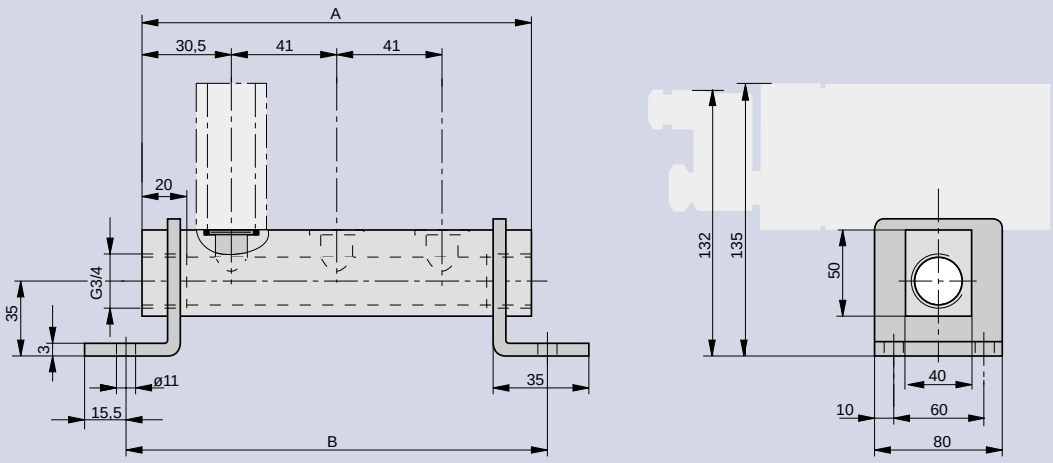

Drawing shows: PL-1/2-3

Dimensions, Order Instructions and Weight (mass)

Type	**Order No.**	No. of valves	Dim. A	Dim. B	consisting of Manif.	Bracket	Screw	O-ring	Weight (kg)
PL-1/2-2	**PD 39016-0002**	2	102	122	1	2	4	2	0.45
PL-1/2-3	**PD 39016-0003**	3	143	163	1	2	6	3	0.60
PL-1/2-4	**PD 39016-0004**	4	184	204	1	2	8	4	0.80

Dimensions in mm

RPS-Supply Manifold for Directional Valves, Series S9-1/8 and S9-1/4

Series RPSL-1/8-..

RPS-Supply Manifolds for Way Valve Series S9-1/8

Material

Description	Material
RPS-supply manifold	Al, anodized
Screws	Galvanized steel
O-ring	Oil-resistant rubber

Accessories

Description	Order No.
Complete cover strip	**PD 32956**
Flow divider	**PD 42483**

RPS-supply manifolds reduce and simplify tubing. They allow a compact and clear design.
The RPS manifolds have a common compressed air supply (P) and common vent lines (R, S).
Valves can be mounted in groups of 2-10 pieces.

The delivery includes
RPS-supply manifold
Mounting screws
O-rings

RPS-Supply Manifold
Type: RPSL-S9-1/8-..

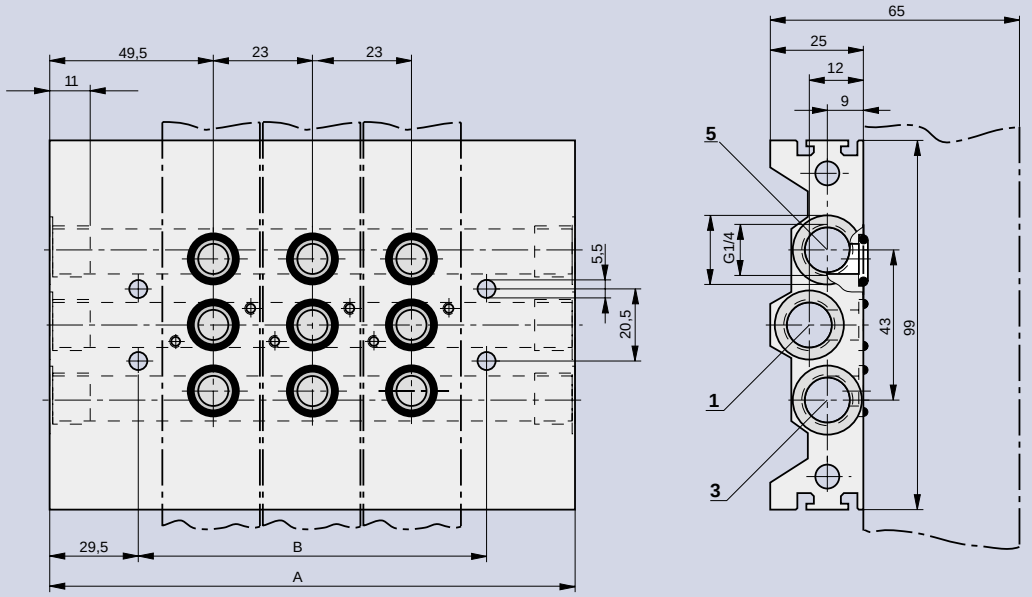

Drawing shows: RPSL--S9-1/8-3

Dimensions, Order Instructions and Weight (mass)

Type	Order No.	No. of valves	Dimensions A	Dimensions B	consisting of Manifold	consisting of Screw	consisting of O-ring	Weight (kg)
RPSL-S9-1/8-2	**PD 44813-0002**	2	122	63	1	4	6	0.47
RPSL-S9-1/8-3	**PD 44813-0003**	3	145	86	1	6	9	0.57
RPSL-S9-1/8-4	**PD 44813-0004**	4	168	109	1	8	12	0.67
RPSL-S9-1/8-5	**PD 44813-0005**	5	191	1321	1	10	15	0.77
RPSL-S9-1/8-6	**PD 44813-0006**	6	214	155	1	12	18	0.87
RPSL-S9-1/8-7	**PD 44813-0007**	7	237	178	1	14	21	0.97
RPSL-S9-1/8-8	**PD 44813-0008**	8	260	201	1	16	24	1.07
RPSL-S9-1/8-9	**PD 44813-0009**	9	283	224	1	18	27	1.17
RPSL-S9-1/8-10	**PD 44813-0010**	10	306	247	1	20	30	1.27

Material

Description	Material
RPS-supply manifold	Al, anodized
Screws	Galvanized steel
O-ring	Oil-resistant rubber

Accessories

Description	**Order No.**
Complete cover strip	**PD 32957**
Flow divider	**PD 42516**

RPS-Supply Manifolds for Way Valve Series S9-1/4

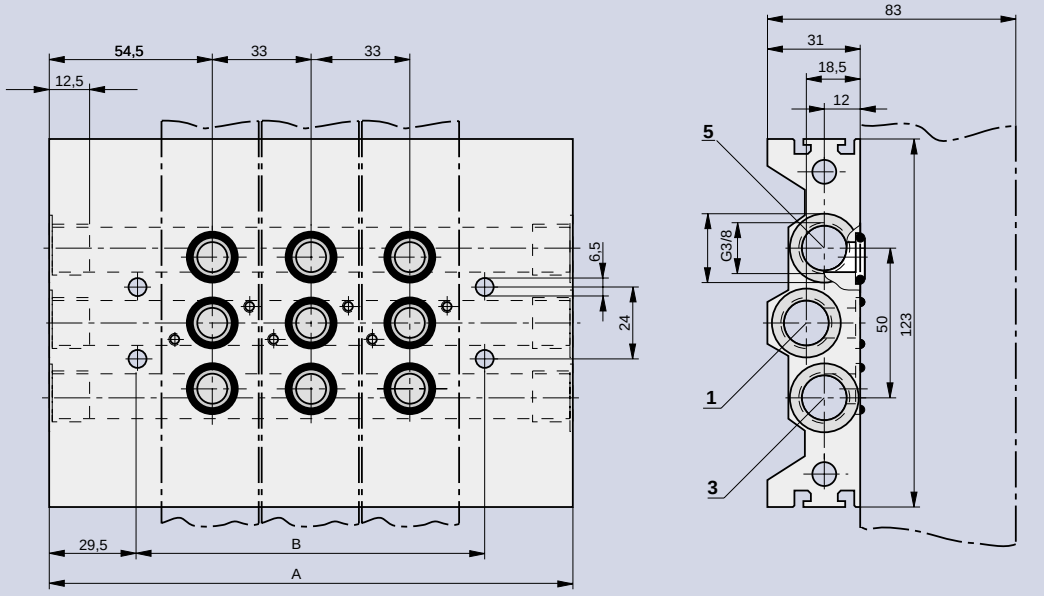

Drawing shows: RPSL--S9-1/4-3

RPS-supply manifolds reduce and simplify tubing. They allow a compact and clear design.
The RPS manifolds have a common compressed air supply (P) and common vent lines (R, S).
Valves can be mounted in groups of 2-10 pieces.

The delivery includes
RPS-supply manifold
Mounting screws
O-rings

Dimensions, Order Instructions and Weight (mass)

Type	**Order No.**	No. of valves	Dimensions A	B	consisting of Manifold	Screw	O-ring	Weight (kg)
RPSL-S9-1/4-2	**PD 44814-0002**	2	142	83	1	4	6	0.845
RPSL-S9-1/4-3	**PD 44814-0003**	3	175	116	1	6	9	1.045
RPSL-S9-1/4-4	**PD 44814-0004**	4	208	149	1	8	12	1.245
RPSL-S9-1/4-5	**PD 44814-0005**	5	241	182	1	10	15	1.445
RPSL-S9-1/4-6	**PD 44814-0006**	6	274	215	1	12	18	1.645
RPSL-S9-1/4-7	**PD 44814-0007**	7	307	248	1	14	21	1.845
RPSL-S9-1/4-8	**PD 44814-0008**	8	340	281	1	16	24	2.045
RPSL-S9-1/4-9	**PD 44814-0009**	9	373	314	1	18	27	2.245
RPSL-S9-1/4-10	**PD 44814-0010**	10	406	347	1	20	30	2.445

Single Base Plates

Base Plates to ISO 5599 Sizes 1, 2, 3

Versions
- Single base plates according to VDMA 24345 form A
- Single base plates according to VDMA 24345 form B

Single Base Plate, Form A
Type: S9-.-A

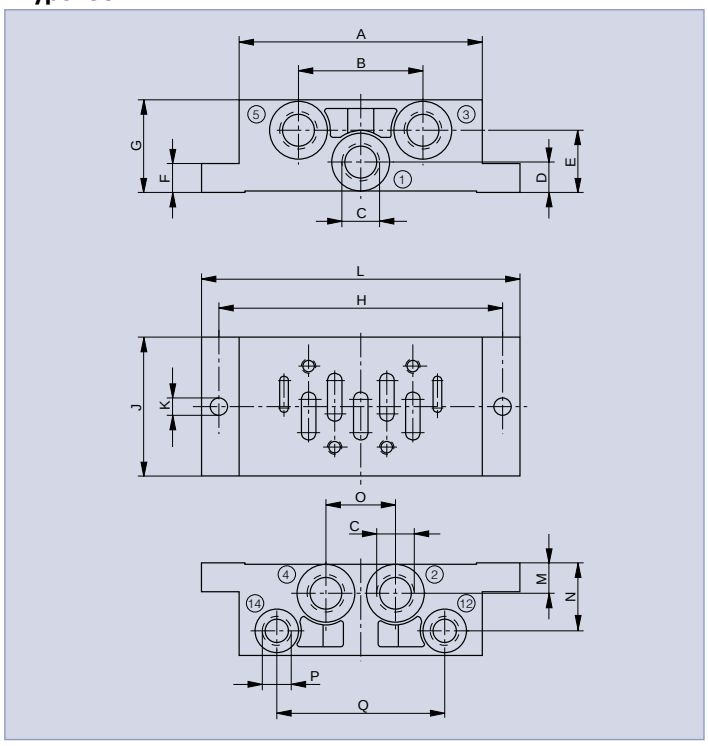

Dimensions Table (mm), Single Base Plate, Form A

ISO-Size	A	B	C	D	E	F	G	H
1	84	43	G1/4	10.5	21.5	10	32	98
2	95	56	G3/8	14	26	13	40	112
3	119	68	G1/2	17	17	18	32	136

ISO-Size	J	K	L	M	N	O	P	Q
1	48	5.5	110	10.5	23.5	24	G1/8	58
2	57	6.6	124	14	30	30	G1/8	74
3	71	6.6	149	17	22	32	G1/8	90

Single Base Plate, Form B
Type: S9 -.-B

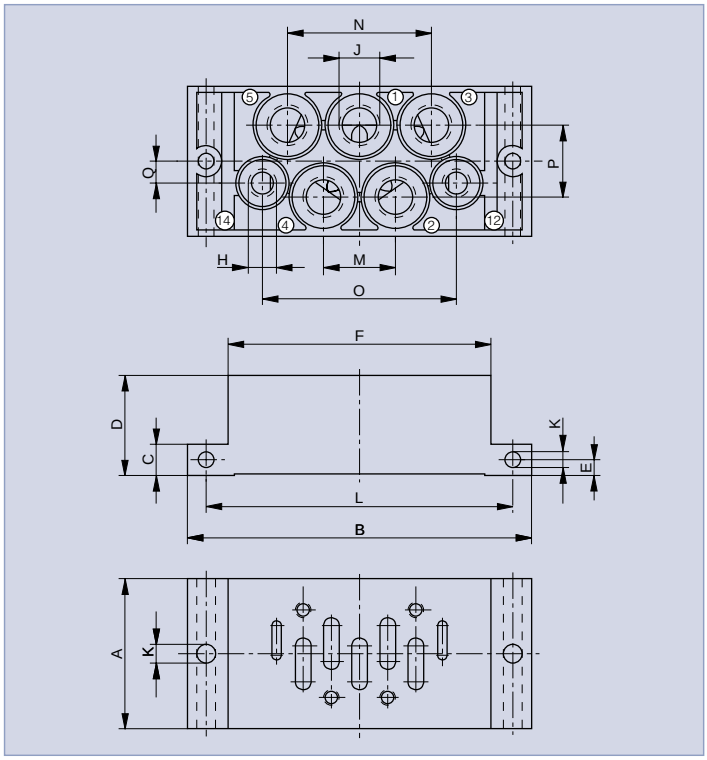

Dimensions Table (mm),Single Base Plate, Form B

ISO-Size	A	B	C	D	E	F	H	J
1	46	110	10	30	5	84	G1/8	G1/4
2	56	124	13	35	6.5	95	G1/8	G3/8
3	71	149	18	32	9	119	G1/8	G1/2

ISO-Size	K	L	M	N	O	P	Q
1	5.5	98	23	46	62	23	7.5
2	6.6	112	28	56	73	27	7.5
3	6.6	136	34	68	90	35	10

Order Instructions

ISO-Size	Order Instructions Type	Order Instructions Order No.
1	**S9-1-A**	**KX 9076**
2	**S9-2-A**	**KX 9433**
3	**S9-3-A**	**KX 9434**

Order Instructions

ISO-Size	Order Instructions Type	Order Instructions Order No.
1	**S9-1-B**	**KX 9077**
2	**S9-2-B**	**KX 9436**
3	**S9-3-B**	**KX 9437**

Base Plates Combinations

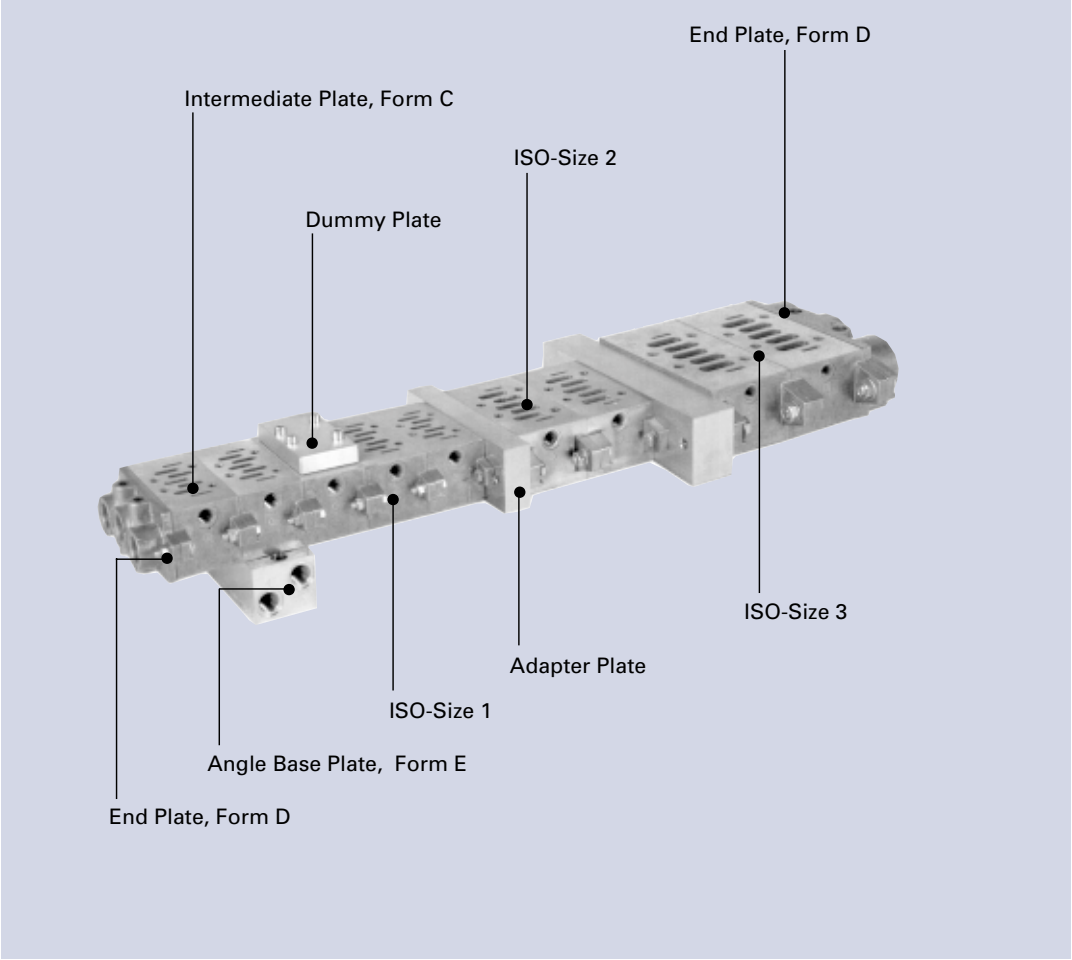

Base Plates to ISO 5599 Sizes 1, 2, 3

Versions to VDMA 24345

- End plate set, form D to intermediate plate form C
- Intermediate plate, form C
- Plate combinations of forms C and D
- Angle base plate, form E, for intermediate plate, form C
- Accessories

End Plate Set, Form D for Intermediate Plate

Order Instructions

ISO-Size	Order Instructions Type	Order No.
1	**S9-1-D**	**KX 9078**
2	**S9-2-D**	**KX 9421**
3	**S9-3-D**	**KX 9422**

Comprises
End plate set, complete with screws

Intermediate Plate, Form C

Order Instructions

ISO-Size	Order Instructions Type	Order No.
1	**S9-1-C**	**KX 9079**
2	**S9-2-C**	**KX 9419**
3	**S9-3-C**	**KX 9420**

Comprises
Intermediate plate, complete with O-rings and screws

Angle Base Plate, Form E for Intermediate Base Plate, Form C

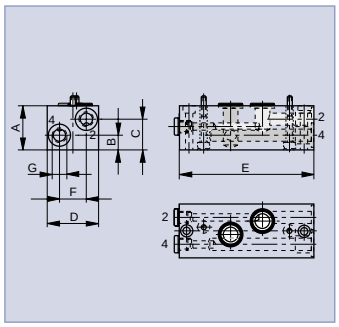

Dimensions Table (mm) and Order Instructions

Order Instructions Type	Order No.	ISO-Size	A	B	C	D	E	F	G
S9-1-E	**KX 9081**	1	37	12	25	42	110	22	G1/4
–	**–**	2	–	–	–	–	–	–	–
S9-3-E	**KX 9425**	3	45	17	29	70	190	36	G1/2

Comprises
Angle base plate, complete with O-rings and screws

Dimensions in mm

Base Plates Combinations

Base Plates to ISO 5599 Sizes 1, 2, 3

Versions to VDMA 24345
- End plate set, form D to intermediate plate form C
- Intermediate plate, form C
- Plate combinations of forms C and D
- Angle base plate, form E, for intermediate plate, form C
- Accessories

Adapter Plate for combining ISO Sizes 1, 2, 3

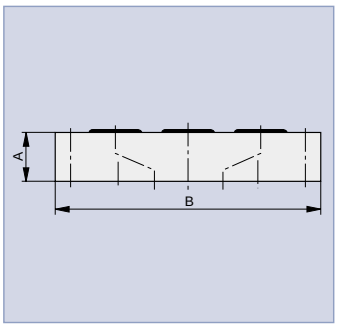

Dimensions Table (mm) and Order Instructions

Order Instructions		ISO	A	B	Width
Type	Order No.	Size			
S9-1-2-KP	KX 9430	1 to 2	20	135	45
S9-2-3-KP	KX 9431	2 to 3	25	190	55
S9-1-3-KP	KX 9432	1 to 3	35	190	50

Comprises
Adapter plate with O-rings and screws

Dummy Plate

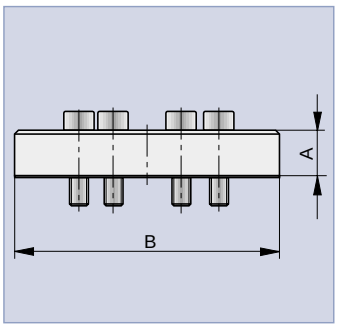

Dimensions Table (mm) and Order Instructions

Order Instructions		ISO	A	B	Width
Type	Order No.	Size			
S9-1-BP	KX 9082	1	12	70	40
S9-2-BP	KX 9423	2	12	90	55
S9-3-BP	KX 9424	3	12	110	70

Comprises
Dummy plate with gasket and screws

Plug

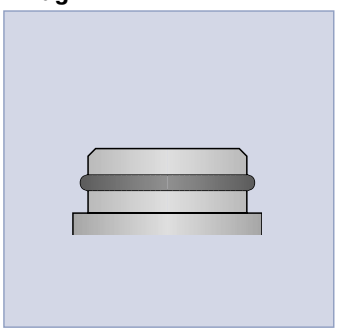

Order Instructions

Order Instructions		For ISO Size
Type	Order No.	
S9-1-VS	KX 5789	1
S9-2-VS	KX 9426	2
S9-3-VS	KX 9427	3

Base Plate Combinations of Forms C and D

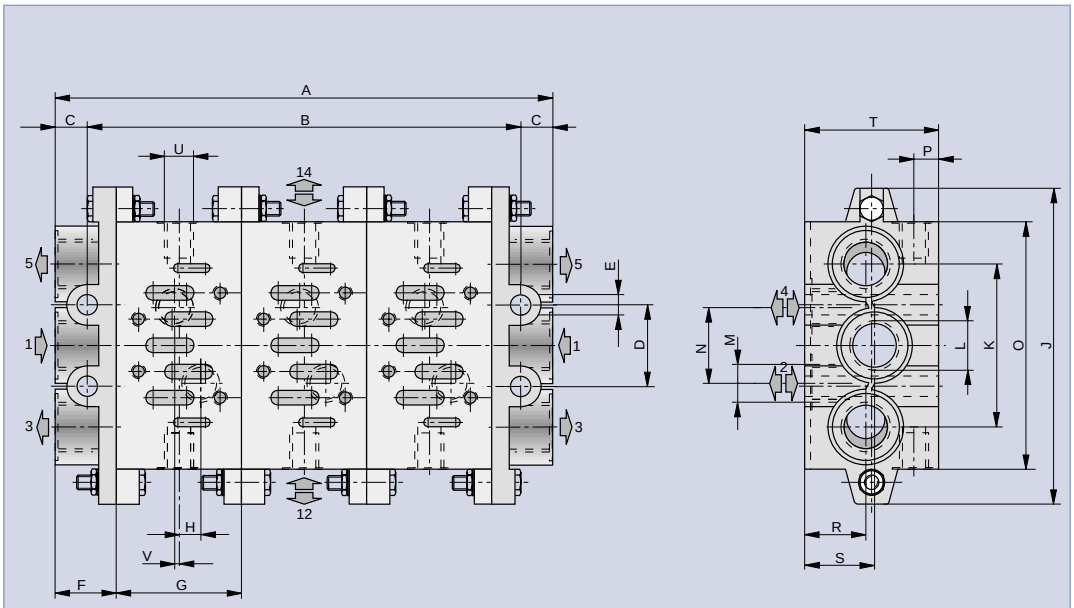

Drawing shows: 3-fold plate combinations

Dimensions Table (mm)

ISO Size	Number of Plates	A	B	C	D	E	F	G	H	J	K	L	M	N	O	P	R	S	T	U	V
1	2	130	108	11	28	Ø7	22	43	7.5	110	56	G3/8	G1/4	26	85	8.5	21	24	46	G1/8	1.5
1	3	173	151	11	28	Ø7	22	43	7.5	110	56	G3/8	G1/4	26	85	8.5	21	24	46	G1/8	1.5
1	4	216	194	11	28	Ø7	22	43	7.5	110	56	G3/8	G1/4	26	85	8.5	21	24	46	G1/8	1.5
1	5	259	237	11	28	Ø7	22	43	7.5	110	56	G3/8	G1/4	26	85	8.5	21	24	46	G1/8	1.5
1	6	302	280	11	28	Ø7	22	43	7.5	110	56	G3/8	G1/4	26	85	8.5	21	24	46	G1/8	1.5
2	2	164	138	13	35	Ø9	26	56	6	135	68	G1/2	G3/8	30	100	9	22	24	47	G1/8	5
2	3	220	194	13	35	Ø9	26	56	6	135	68	G1/2	G3/8	30	100	9	22	24	47	G1/8	5
2	4	276	250	13	35	Ø9	26	56	6	135	68	G1/2	G3/8	30	100	9	22	24	47	G1/8	5
2	5	332	306	13	35	Ø9	26	56	6	135	68	G1/2	G3/8	30	100	9	22	24	47	G1/8	5
2	6	388	362	13	35	Ø9	26	56	6	135	68	G1/2	G3/8	30	100	9	22	24	47	G1/8	5
3	2	202	172	15	52	Ø12	30	71	8	190	104	G1	G1/2	38	140	10	31	34	56	G1/8	6
3	3	273	243	15	52	Ø12	30	71	8	190	104	G1	G1/2	38	140	10	31	34	56	G1/8	6
3	4	344	314	15	52	Ø12	30	71	8	190	104	G1	G1/2	38	140	10	31	34	56	G1/8	6
3	5	415	385	15	52	Ø12	30	71	8	190	104	G1	G1/2	38	140	10	31	34	56	G1/8	6
3	6	486	456	15	52	Ø12	30	71	8	190	104	G1	G1/2	38	140	10	31	34	56	G1/8	6

Order Instructions for Base Plate Combinations

Description	ISO Size	**Order Instructions**	
		Type	**Order No.**
Plate combination for 2 valves	1	**S9-1-002**	**PD 30076-0002**
	2	**S9-2-002**	**PD 32951-0002**
	3	**S9-3-002**	**PD 32952-0002**
Plate combination for 3 valves	1	**S9-1-003**	**PD 30076-0003**
	2	**S9-2-003**	**PD 32951-0003**
	3	**S9-3-003**	**PD 32952-0003**
Plate combination for 4 valves	1	**S9-1-004**	**PD 30076-0004**
	2	**S9-2-004**	**PD 32951-0004**
	3	**S9-3-004**	**PD 32952-0004**
Plate combination for 5 valves	1	**S9-1-005**	**PD 30076-0005**
	2	**S9-2-005**	**PD 32951-0005**
	3	**S9-3-005**	**PD 32952-0005**
Plate combination for 6 valves	1	**S9-1-006**	**PD 30076-0006**
	2	**S9-2-006**	**PD 32951-0006**
	3	**S9-3-006**	**PD 32952-0006**

Plate combinations made up to customer's requirements on request

Accessories			
Adapter plate for pressure switch *	1	S9-1-DR	KX 9293
	2	S9-2-DR	KX 9428
	3	S9-3-DR	KX 9429
Adapter plate with built-in pressure regulator	1	S9-1-RE	PD 31826
	3	S9-3-RE	PD 33098

* Pressure switches available on request

Compatibility tables
for HOERBIGER-ORIGA Ex safety valves

Intrinsically safe field bus interfaces

Manufacturer	Voltage variants M (6–9VDC)	N (7–16VDC)	L (12–24VDC)	E (24–30VDC)
Pepperl+Fuchs	Profibus-PA: KFD2-GT(2)-DP(R).xPA			ASI: VAA-2EA-G5-NV1-Ex
Turck	Profibus PA	Sensoplex ExCom	ExCom	ExCom
Bartec (for Profibus-DP) (for Interbus-S)		07-7331-2305/0000 07-7331-2105/0000		07-7331-2305/1000 07-7331-2105/1000

Electrically isolated Valve Control (switching emplifir)

Manufacturer	Voltage variants M (6–9VDC)	N (7–16VDC)	L (12–24VDC)	E (24–30VDC)
STAHL (built-on types)	9351/10-11-10	9351/10-11-10 9351/10-12-10 9351/10-13-10	9351/10-12-10 9351/10-13-10 9351/10-14-10 9351/10-15-10	9351/10-15-10 9351/10-16-10
STAHL (Europa cards)		9651/40-12-10	9651/40-14-10	9651/40-16-10 9651/40-19-10
STAHL (module)	9151/10-11-10			9151/10-16-10
Pepperl+Fuchs (valve control modules)		KHD2SRÜ-Ex1.W.LB	KFD2-SD-Ex1.17	KFD2-SD-Ex1.36 KFD2-SD-Ex1.48 KFD2-SL-Ex1.48 KSD2-BO-Ex EGA-041 und ...-3
Turck (multimodul)		MK72-S01-Ex MK72-S03-Ex MK72-S04-Ex MK72-S05-Ex MK72-S06-Ex MK72-S07-Ex	MK72-S01-Ex MK72-S04-Ex	MK72-S02-Ex
Turck (multicart)		MC72-41Ex-T/24VDC MC72-43Ex-T	MC72-41Ex-T/24VDC MC72-43Ex-T	MC72-42Ex-T/24VDC MC72-44Ex-T
Turck (multisafe)		MS13-231Ex0-T/24VDC		
Bartec		07-7311-93MT/AAA0		

Safety barriers (Zener barriers)

Manufacturer	Voltage variants			
	M (6–9VDC)	N (7–16VDC)	L (12–24VDC)	E (24–30VDC)
Pepperl+Fuchs	Z 757	Z 710 Z 710.CL Z 715 Z 715.CL Z 715.1K Z 764 Z 765	Z 715 Z 715.CL Z 715.1K Z 722 Z 722.CL Z 765 Z 772	Z 728 Z 728.CL Z 778 Z 796 Z 787 Z 787.H
Stahl	9001/01-083-442-10 9001/01-086-390-10 9001/01-086-150-10 9001/01-086-050-10	9001/01-158-150-10 9001/01-158-390-10	9004/01-168-050-10 9001/01-199-390-10 9001/01-199-150-10 9001/01-199-100-10 9001/01-199-000-10	9004/51-206-050-00 9004/01-280-050-00 9004/01-315-025-00 9001/01-280-165-10 9001/01-280-100-10 9001/01-280-085-10 9001/01-280-050-10 9001/01-280-000-10 9002/11-260-138-00 9002/13-280-093-00 9002/13-280-110-00 9002/33-280-000-00
Weidmüller				Serie WIS1200
Bartec				07-7311-93M8/Q010

HOERBIGER-ORIGA

...your competent partner

with global service and distribution

for more information visit the following web sites

www. hoerbiger-origa.com
www.interact-system.com
www.airfit.com
www. hoerbiger.com

or contact your local HOERBIGER-ORIGA company

A	HOERBIGER-ORIGA Pneumatik GmbH • Dr. Alexander-Schärf-Straße 12 • A-2700 Wiener Neustadt • Tel. +43 (0)2622 26071-0 • Fax +43 (0)2622 26071-5 • e-mail: amarket@hoerbiger-origa.com
AUS	HOERBIGER AUSTRALIA PTY.LTD. • 142 Lawrence • AUS-NSW2015 Alexandria (Sydney) • Tel. +61 (0)2 9550-1077 • Fax +61 (0)2 9550-6515 • e-mail: hoesyd.@hoerbiger.com.au
CH	HOERBIGER-ORIGA AG • Industriestr. 30 • CH-8112 Otelfingen (Zürich) • Tel. +41 (0)1 846 6860 • Fax +41 (0)1 846 6870 • e-mail: chsales@hoerbiger-origa.com
CN	HOERBIGER Compressor Valve (Shanghai) Co., Ltd. • 39 He Fa Rd, Caohejing Hi-Tech Park • ROC-200233 Shanghai • Tel. +86 (0)21 6485 0855 • Fax +86 (0)21 6485 0958 • e-mail: hoesha@public.sta.net.cn
D	HOERBIGER-ORIGA GmbH • Industriestr. 8 • D-70794 Filderstadt • Tel. +49 (0)7158 1703-0 • Fax +49 (0)7158 64870 • e-mail: dmarket@at.hoerbiger.com
D	HOERBIGER-ORIGA GmbH • Südliche Römerstraße 15 • D-86972 Altenstadt • Tel. +49 (0)8861 221-0 • Fax +49 (0)8861 221-1305 • e-mail: pneu@at.hoerbiger.com
D	HOERBIGER-ORIGA GmbH (Interface) • Diessener Straße 8 • D-86956 Schongau • Tel. +49 (0)8861 2301-0 • Fax +49 (0)8861 2301-10 • e-mail interface@at.hoerbiger.com
E	HOERBIGER-ORIGA S.A. • C/Nogal N° 8, Poig. Ind. El Nogal • E-28110 Algete (Madrid) • Tel. +349 (0)1 629 09 00 • Fax +349 (0)1 628 25 54 • office@hosa.hoerbiger.com
F	HOERBIGER-ORIGA S.A. • 11 avenue de Norvège • F-91978 Courtaboeuf • Tel.+33 (0)1 69 29 22 00 • Fax +33 (0)1 69 29 22 10 • e-mail: fmarket@hoerbiger-origa.com
GB	HOERBIGER-ORIGA Ltd. • Tewkesbury Industrial Estate • Tewkesbury GL 20 8 ND GB • Tel. +44 1684 85 00 00 • Fax +44 1684 85 05 55 • e-mail: sales@hoerbiger-origa.com
I	HOERBIGER-ORIGA S.R.L. • Via Martiri della Libertà 4/6 • I-20060 Liscate (MI) • Tel. +39 02 95 35 03 07 • Fax +39 02 95 35 05 13
J	HOERBIGER NIPPON SERVICE • 129-1, Aza Houma-Kanahori-Mae • J-289-1600 Chiba-Ken • Tel. +81 (0)479 77 22 28 • Fax +81 (0)479 77 23 03
NO	HOERBIGER-ORIGA AS • Grønland 57 • NO-3045 Drammen • Tel. +47 3 288 08 40 • Fax +47 32 82 83 20 • e-mail: semarket@hoerbiger-origa.com
NL	HOERBIGER-ORIGA GmbH • Industriestr. 8 • D-70794 Filderstadt • Tel. +49 (0)7158 1703-0 • Fax +49 (0)7158 64870 • e-mail: dmarket@at.hoerbiger.com
MY	HOERBIGER-ORIGA Sdn Bhd • 12 Jalan USJ 7/3A Subang Jaya • MY 47610 Petaling Jaya (Selangor) • Tel. +60 (0)3 734 78 22 • Fax +60 (0)3 734 78 23 • e-mail: sqmarket@hoerbiger-origa.com
P	HOERBIGER-ORIGA S.A. • Rua das Dozes Casas 235, 2° Dto. • P-4000 Porto • Tel. +351 22 550 71 79 • Fax. +351 22 509 22 51 • e-mail: office@hosa.hoerbiger.com
SGP	HOERBIGER-ORIGA Pte Ltd • 5012 '05-01 Ang Mo Kio Ave 5, Techplace II • SGP-569876 Singapore • Tel. +65 483 2959 • Fax +65 483 29 79
SE	HOERBIGER-ORIGA AB • Kungsgatan 10, Box 67 • SE-73622 Kungsör • Tel. +46 227 411 00 • Fax +46 227 411 29 • e-mail: semarket@hoerbiger-origa.com
USA	HOERBIGER-ORIGA Corporation • 100 West Lake Drive • IL-Glendale Heights, Illinois • Tel. +1 630 871 830-0 • Fax +1 630 871 1515 • e-mail: usmarket@hoerbiger-origa.com
ZA	HOERBIGER-ORIGA (SA) (PTY) Ltd • 9 Fuchs Street • ZA-1450 Alrode, Gauteng • Tel. +27 (0)11 908 13 10 • Fax +27 (0)11 908 13 12 • e-mail: gunter@hoerbiger.co.za
ZA	HOERBIGER-ORIGA (SA) (PTY) Ltd • 2 Le Mans Place • ZA3608 Westmead, Pinetown • Tel. +27 (0)31 700 56 11 • Fax +27 (0)31 700 59 06 • e-mail: gunter@hoerbiger.co.za
ZA	HOERBIGER-ORIGA (SA) (PTY) Ltd • 4A Acteon Road • ZA-Paarden Eiland, Cape Town • Tel. +27 (0)21 511 19 05 • Fax +27 (0)21 510 29 47 • e-mail: gunter@hoerbiger.co.za

Additional representatives can be found on the Internet

The Strategic Business Units of the HOERBIGER Group

SBU Compression Technology

Your Contact

HOERBIGER ORIGA

SBU Automation Technology

SBU Drive Technology

The right to introduce technical modifications is reserved